100% CONSTRUCTION DOCUMENTS

ABBREVIATIONS

A.F.F.	ABOVE FINISHED FLOOR
A.H.U.	AIR HANDLING UNIT
ALT.	ALTERNATE
ALTERNATE	ALTERNATE
APPROX.	APPROXIMATE
BD.	BOARD
BLDG.	BUILDING
BLK.	BLOCK
BLKG.	BLOCKING
BLW.	BELOW
BRK.	BRICK
BRKR.	BREAKER
BSMT.	BASEMENT
C.J.	CONTROL JOINT
CLG.	CEILING
CLR.	CLEAR
CMU	CONCRETE MASONRY UNIT
C.O.	CLEAN OUT
CONC.	CONCRETE
CO	CLEAN OUT
CU. FT.	CUBIC FOOT
CU. IN.	CUBIC INCH
CU. YD.	CUBIC YARD
DIA. Ø	DIAMETER
DET.	DETAIL
DIST.	DISTRIBUTION
DEGR.	DEGREE
DIM.	DIMENSION
DT.	DOWNTHROAT/DOWN
DISC.	DISCONNECT
DL	DEAD LOAD
DN.	DOWN
DWG.	DRAWING
DWR.	DRAWER
E.F.	EXHAUST FAN
EXP.	EXPANSION
EXP. J.	EXPANSION JOINT
EXT.	EXTERIOR
FIN.	FINISH
FLR.	FLOOR
FD.	FOUNDATION
F.D.	FIRE DOOR
F.R.	FIRE RATING
F.F.	FOOT/FEET
FTG.	FOOTING
GALV.	GALVANIZED
GYP.	GYPSUM
GYP. BD.	GYPSUM BOARD
GOVT.	GOVERNMENT
GR. FL.	GROUND FLOOR
GYP.	GYPSUM
H.C.	HOLLOW CORE
H.D.G.	HOT DIP GALVANIZED
HDWE.	HARDWARE
HDWR.	HARDWARE
H.P.	HORSEPOWER
HR.	HOUR
HTR.	HEATER
HTG.	HEAT EXCHANGE
HVAC	HEATING, VENTILATING AND AIR CONDITIONING
HWY.	HIGHWAY
I.D.	INSIDE DIAMETER
INCL.	INCLUDE
INCLUD.	INCLUDING
INCL.	INCLUDED
INSUL.	INSULATION
INT.	INTERIOR
INCAND.	INCANDESCENT
JST.	JOIST
KD.	KIN-DRIED
KIN.	KILN-DRIED
KDAT	KILN-DRIED AT HEAT
LAM.	LAMINATED
LAV.	LAVATORY
LB.	POUND
LIN.	LINEAR
LOUV.	LOUVER
LIN.	LINEAR
L.L.	LIVE LOAD
MANUF.	MANUFACTURE
MAX.	MAXIMUM
MF.	MILL FINISH
MIN.	MINIMUM
MISC.	MISCELLANEOUS
MWH.	MOISTURE HIGH WATER
MLW.	MEAN LOW WATER
MSL.	MEAN SEA LEVEL
MSL.	MEAN SEA LEVEL
MOD.	MODIFICATION
NTS.	NOT TO SCALE
NO.	NUMBER
O.A.	OVERALL
O.C.	ON CENTER
O.D.	OUTSIDE DIAMETER
OH.	OVERHEAD
OPP.	OPPOSITE
PARTITN.	PARTITION
PL.	PLATE AND CEMENT
PSF	POUNDS PER CUBIC FOOT
PROF.	PROFESSIONAL ENGINEER
PERIM.	PERIMETER
PLAS.	PLASTERED
PLYD.	PLYWOOD
PNL.	PANEL
PRCAST	PRECAST
PRESTRESSED	PRESTRESSED
PSF	POUNDS PER SQUARE FOOT
PSI	POUNDS PER SQUARE INCH
PT.	PRESSURE TREATED
QR.	QUARTER SAWN
RAD.	RADIUS
R.A.	RETURN AIR
REINF.	REINFORCING BAR
REFRIG.	REFRIGERATION
REQ.	REQUIRED
RCP.	REINFORCING
RM.	ROOM
R.O.	ROUGH OPENING
RS	ROUGH SAWN
S.C.	SOLID CORE
SCHD.	SCHEDULE
SCR.	SCREWS
SECT.	SECTION
SF TTHO	SOLID TIMBER
SGD	SLIDING GLASS DOOR
SHT.	SHEET
SPEC.	SPECIFICATION
SPR.	SPRUCE
SQ.	SQUARE
SQ. FT.	SQUARE FOOT
SQ. IN.	SQUARE INCH
SQ. YD.	SQUARE YARD
SS	STAINLESS STEEL
ST.	STEEL
SUSP.	SUSPENDED
SVR.	SUPPLY
STD.	STANDARD
STRL.	STRUCTURAL
S YP	SOUTHERN YELLOW PINE
SYP	SOUTHERN YELLOW PINE
SHG	SHEATHING GRADE
TEL.	TELEPHONE
T&G	TONGUE AND GROOVE
TYP.	TYPICAL
U.G.	UNDERGROUND ELECTRIC
U.L.	UNDERWRITERS LABORATORIES
UNDERWRITERS LABORATORIES, INC.	
V.C.	VOLT
VERT.	VERTICAL
VIF	VERIFY IN FIELD
VIF	VERIFY IN FIELD
VPF	VAPOR PRESSURE FACTOR
W/	WITH
W/O	WITHOUT
W.C.	WATER CLOSET
WD.	WOOD
WDW.	WINDOW
WFP	WOVEN FIBER FABRIC
YD.	YARD

REFERENCE LEGEND

G8 / A502 — SECTION IDENTIFICATION / SHEET NUMBER

G8 / A502 — DETAIL IDENTIFICATION / SHEET NUMBER

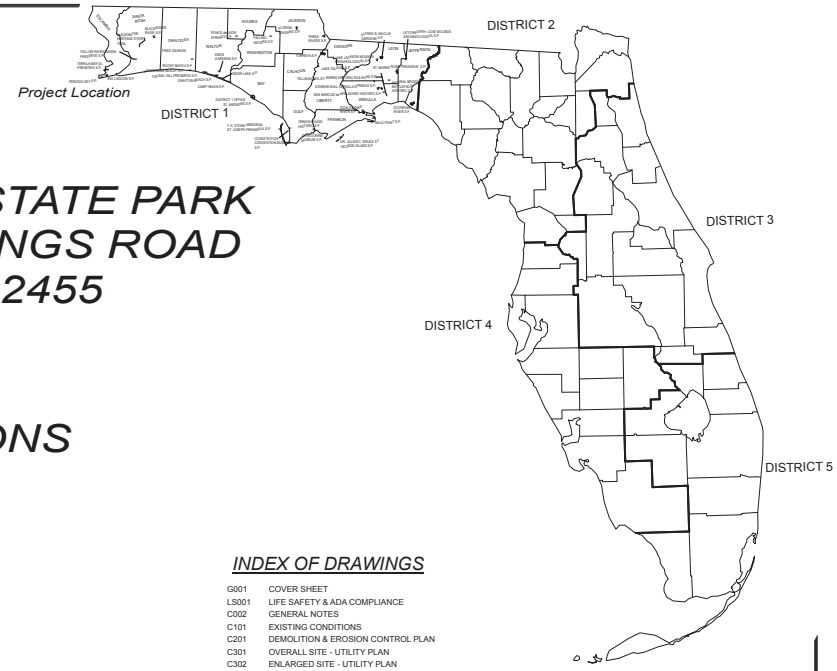

PONCE DE LEON SPRINGS STATE PARK
2860 PONCE DE LEON SPRINGS ROAD
PONCE DE LEON FL 32455

DISTRICT 1

HOLMES

RESTROOM ADDITIONS

PROJECT # 61354C

ADD ALTERNATES

ADD ALTERNATE 1:
REPLACE ALL EXISTING INTERIOR FIXTURES WITH LED FIXTURES. SEE ELECTRICAL DRAWINGS.
BASE BID: NEW LIGHT FIXTURES TO BE LED. EXISTING TO REMAIN. SEE ELECTRICAL.

PROJECT SUMMARY

TWO ADA FAMILY RESTROOMS ARE BEING ADDED TO EITHER SIDE OF THE EXISTING RESTROOM BUILDING. EXISTING UNDERGROUND PLUMBING LINES ARE BEING MODIFIED AS REQUIRED TO ACCOMMODATE THE ADDITIONS. NEW ADA COMPLIANT WALKWAYS ARE BEING ADDED TO CONNECT THESE RESTROOMS TO THE EXISTING WALKWAYS ON SITE.

INDEX OF DRAWINGS

G001	COVER SHEET
LS001	LIFE SAFETY & ADA COMPLIANCE
C002	GENERAL NOTES
C101	EXISTING CONDITIONS
C201	DEMOLITION & EROSION CONTROL PLAN
C301	OVERALL SITE - UTILITY PLAN
C302	ENLARGED SITE - UTILITY PLAN
C303	GRAVITY SEWER PLAN AND PROFILE
C401	DETAILS
C402	DETAILS
C403	DETAILS
A001	SCHEDULES
A101	FLOOR PLAN
A102	REFLECTED CEILING PLANS
A103	ROOF PLAN
A201	EXTERIOR ELEVATIONS DEMO
A202	EXTERIOR ELEVATIONS
A301	BUILDING SECTIONS
A302	WALL SECTIONS
A401	ENLARGED PLAN
S100	COVER SHEET
S101	STRUCTURAL NOTES
S102	STRUCTURAL NOTES
S103	STRUCTURAL PLAN SPECIFICATIONS
S110	ROOF & WALL WIND DIAGRAMS
S210	FIRST FLOOR & ROOF FRAMING PLAN
S301	FOUNDATION & SLAB ON GRADE DTLS
S411	WOOD TYPICAL DETAILS & SCHEDULES
S412	WOOD DETAILS
S413	WOOD DETAILS
M001	HVAC NOTES SCHEDULES & SHEET INDEX
M101	BATH HOUSE FLOOR PLAN - HVAC - RENO
E001	ELECTRICAL PLAN - LEGEND & NOTES
E100	ELECTRICAL PLAN - EXISTING/DEMOLITION
E101	ELECTRICAL PLAN - RENOVATIONS
E102	ELECTRICAL SITE PLAN - LIFT STATIONS
P001	PLUMBING NOTES LEGEND & SHEET INDEX
P002	DETAILS - PLUMBING
P101	BATH HOUSE FLOOR PLAN - PLUMBING - DRAIN & VENT
P201	BATH HOUSE FLOOR PLAN - PLUMBING- PRESSURE
P301	RISER DIAGRAMS - PLUMBING

PONCE DE LEON SPRINGS STATE PARK
RESTROOM ADDITIONS

JODIE DODSON
DESIGNER

CN212
CONSULTANT CONTRACT No.

10/19/2023
INITIAL ISSUE DATE

STATE OF FLORIDA
JOEL DODSON
AR0015211
REGISTERED ARCHITECT

Digitally signed by Joel L Dodson
Date: 2023.10.19 16:47:04 -04'00'

FLORIDA DEPARTMENT OF ENVIRONMENTAL PROTECTION

Division of Recreation and Parks Bureau of Design and Construction

TYPICAL ABBREVIATIONS

A	Area or Amperes
AAA	American Automobile Association
ABC	Asphalt Base Course
Abd.	Abandoned
ABS	Acrylonitrite–Butadiene–Styrene Pipe
AC, Ac.	Acre
Asph. Conc.	Asphaltic Concrete
Accel.	Acceleration
Act.	Actuated
ADA	The Americans With Disabilities Act
Adh.	Adhesive
Adj.	Adjust
ADT	Average Daily Traffic
AADT	Annual Average Daily Traffic
Agg.	Aggregate
AISC	American Institute Of Steel Construction
Alt.	Alternate
Al.	Aluminum
ANSI	American National Standards Institute
AOS	Apparent Opening Size
Appl.	Applied, Application
Approx.	Approximate
Artf.	Artificial
Asph.	Asphalt
Assem.	Assembly
Assn.	Association
Assoc.	Associate, Association
ASTM	American Society For Testing Materials
ATPB	Asphalt Treated Permeable Base
Attn.	Attention
Attnuatr.	Attenuator
Aux.	Auxiliary
Ave.	Avenue
AWG	American Wire Gauge
AWS	American Welding Society
Az.	Azimuth
B to B	Back to Back
Bd. or Bnd.	Bond or Bonded
BE	Buried Electric
Beg.	Begin
Bit.	Bituminous
Bk.	Back
BL, BLC	Base Line, Base Line Control
Bldg.	Building
Blkhd.	Bulkhead
Blvd.	Boulevard
BM	Bench Mark
Bndry.	Boundary
Bdr.	Border
Bot.	Bottom
BO	Basin Outlet
BOS	Beginning Of Survey
Br.	Bridge
Brg.	Bearing
Brkwy.	Breakaway
BT	Buried Telephone Cable or Duct
BW	Barbed Wire, Bottom Width or Both Ways
C/G	Curb And Gutter
CA	Coarse Aggregate
Cap.	Capacity
CAP	Corrugated Aluminum Pipe
Caps.	Capital Letters
CASP	Corrugated Aluminized Steel Pipe
CATV	Cable Television
CB	Catch Basin
CBC	Concrete Box Culvert
CBS	Concrete Box Structure
CC, C/C,	Center to Center, Crash Cushion
CCEW	Center to Center Each Way
CD	Cross Drain, Cross Direction (Geotextiles)
Cem.	Cemetery
CFS	Cubic Feet Per Second
CI	Cast Iron
CIP	Cast Iron Pipe
CIPL	Cast In Place
cir. or circ.	Circle or Circular
circ.	Circumference
Cl. or Clear	Clearance
CL,	Center Line
CM	Concrete Monument
CMB	Concrete Median Barrier
CMP	Corrugated Metal Pipe
CMPA	Corrugated Metal Pipe Arch
CO	Clean Out
Col.	Column
Conc.	Concrete
Const.	Construct or Construction
Cont.	Continuation
Contr.	Contractor
Coord.	Coordinate
Corr.	Corrugated
CP	Concrete Pipe
CPE	Corrugated Polyethylene Pipe
Crs. or Cse.	Course
CS	Curve To Spiral
CSP	Corrugated Steel Pipe
CT	Clear Trunk
CTPB	Cement Treated Permeable Base
Ctr.	Center
Culv.	Culvert
CY	Cubic Yard
D	Degree Of Curvature, Depth, Density, Distance, Diameter or Directional Distribution
DA	Deflection Angle
DBH	Diameter At Breast Height
Dbl.	Double
DCS	Degree Of Curvature (Spiral)
DD	Dry Density / Design Document
Deg.	Degree
Dept.	Department
Det.	Detour, Detection, Detectable
DGN or Dgn.	Design
DHV	Design Hourly Volume
DHW	Design High Water
Dia. or D	Diameter
Dim.	Dimension
Dist.	Distance
Disp.	Disposal
DOT	Department Of Transportation
DR	Design Review
Driv.	Driven
Drwy.	Driveway
DS	Design Speed
DSL	Design Service Life
Dwg.	Drawing
E	East or External Distance
e	Rate Of Superelevation
E to E	End to End
EA or Ea.	Each
EB	Eastbound
El. or Elev.	Elevation
Elec.	Electric
Ellip.	Elliptical
Engr.	Engineer
EOS	End Of Survey or Equivalent Opening Size
EOP	Edge Of Pavement
Eq.	Equation or Equal
Equip.	Equipment
Esmt.	Easement
Exist.	Existing
Exp.	Expansion
F or Final	Final Quantity
F & I	Furnish & Install
F to F	Face to Face
FA	Federal Aid or Fine Aggregate
FAC	Florida Administrative Code
FAP	Federal Aid Project
FC	Friction Course
FD	French Drain
Fdn.	Foundation
FFE	Finish Floor Elevation
Fed.	Federal
Fert.	Fertilizer
FES	Flared End Section
FETS	Flared End Terminal Section
FH	Fire Hydrant
FHWA	Federal Highway Administration

Fig.	Figure
Fin.	Finish
FIR	Found Iron Rod
FIP	Found Iron Pipe
Flex.	Flexible
FNC	Found Nail & Cap
FNL	Found Nail
FOC	Fiber Optics Cable
FPM or fpm	Feet Per Minute
FRP	Fiber Reinforced Pipe
FPS or fps	Feet Per Second
FR or Fr.	Frame
Frang.	Frangible
Freq.	Frequency
FS, F.S.	Far Side, Florida Statutes
Ft.	Foot or Feet
FTB	Floating Turbidity Barrier
Fut.	Future
Galv.	Galvanized
Ga.	Gauge or Gage
Ga. / Gal.	Gallon
GD	Gutter Drain
GIP	Galvanized Iron Pipe
GM	Gas Main
GP	Grade Point
Gr.	Grade, Guardrail or Grate
Gr. or Gro.	Gross
GRC	Galvanized Rigid Steel Conduit
Grd.	Ground
gross km	Gross Kilometer
Gr. Wt.	Gross Weight
Gttr.	Gutter
Gy	Gray
HAR	Highway Advisory Radio
HB	Hay Bales
HC	Horizontal Clearance
HD	High Density or Heavy Duty
HD or Hd.	Head
Hdwl.	Headwall
Hndrl	Handrail
Horiz.	Horizontal
HP	High Pressure or Horsepower
Hr.	Hour
HS	High Strength
HSHV	High Strength Horizontal Vertical
Ht.	Height
HW or H.W.	High Water or Hot Water
Hwy.	Highway
Hyd.	Hydrant or Hydraulic
ID	Inside Diameter or Identification
IMC	Intermediate Metal Conduit
Inc.	Incorporated or Including
Incl. or Inc.	Included
Ind.	Industry or Industrial
INV. or Inv.	Invert
IP	Iron Pipe
Install.	Installed
Isect.	Intersection
Isl.	Island
IR	Iron Rod
ITE	Institute Of Transportation Engineers
J	Joule
JB	Junction Box
Jct.	Junction
Jt.	Joint
K	Design Hour Factor or Kelvin
kg/m	Kilogram Per Meter
kg/m2	Kilogram Per Square Meter
kg/m3	Kilogram Per Cubic Meter
Kilo	One Thousand
Kip	1000 Pounds
kn	Knot
L	Length, Length Of Curve, Liter, Left
Lat.	Lateral or Latitude
Lb.	Pound
lb/sy	Pounds Per Square Yard
LBR	Limerock Bearing Ratio
LC	Long Chord
Lin.	Linear
lm	Lumen
Lmrk.	Limerock
LOS	Limit Of Clear Sight
Loc., LO	Location
Long.	Longitude
LS	Length Of Spiral
LT	Left Turn
Lt.	Left
Ltd.	Lighted or Limited
Lum.	Luminaire
L/W	Lightweight
Maint.	Maintenance
Matl.	Material
Max.	Maximum
Med.	Median
MES	Mitered End Section
Mfg.	Manufactured or Manufacturer
MH, M.H.	Manhole, Mounting Height
MHW	Mean High Water
Mi.	Mile
Mid.	Middle
Min.	Minimum or Minute
Misc.	Miscellaneous
MLW	Mean Low Water
Mobl.	Mobilization
Mod.	Modify or Modified
Mon.	Monument
MOT	Maintenance Of Traffic
MSL	Mean Sea Level
Mtd.	Mounted
MUTCD	Manual On Uniform Traffic Control Device
MUTS	Manual On Uniform Traffic Studies
N	North or Newton
NA or N/A	Not Available or Not Applicable
NAVD	National American Vertical Datum
NC	National Coarse or Normal Crown
NEMA	National Electrical Manufacturers Association
NGVD	National Geodetic Vertical Datum of 1929
NGS	National Geodetic Survey
NHS	National Highway System
NHW	Normal High Water
NIC	Not In Contract
NTS	Not To Scale
NW	Northwest
Opass	Overpass
O to O,	Out to Out
OA	Overall
O.B.G.	Optional Base Group
OC or O.C.	On Center
OD or O.D.	Outside Diameter
OE	Overhead Electric
OH,	Overhead
Opt.	Option, Optional or Optically
OT	Overhead Telephone
Oz.	Ounce
P	Passenger Car & Light Delivery Truck
Part.	Participation or Partition
Pavt.	Pavement
PC	Point Of Curvature
PE	Professional Engineer
Ped	Pedestrian or Pedestal
Pen.	Penetration
PG	Profile Grade
PGL	Profile Grade Line
pH	Measure Of Acidity or Alkalinity
PI	Point Of Intersection
PL or P L	Property Line or Plate
POB	Point of Beginning
POC	Point Of Commencement
POST	Point On Semi–Tangent
POT	Point On Tangent
PRC	Point Of Reverse Curvature
Prest.	Prestressed
Prob.	Probability
Prod.	Product, Production, Producer or Produced

Prog.	Program or Progression
Proj.	Project or Projection
PS & E	Plans, Specifications And Estimates
PT	Point Of Tangency or Pressure Treated
PVC	Polyvinyl Chloride
PRC	Point Of Reverse Curvature
Prcst.	Precast
Prest.	Prestressed
Proj.	Project or Projection
Q	Peak Discharge or Flow Volume
QPL	Qualified Products List
R	Right
R or Rad.	Radius
R or Rng.	Range
RC	Reverse Crown
RCP	Reinforced Concrete Pipe
RCPA	Reinforced Concrete Pipe Arch
Rd.	Road or Round
Rdsd.	Roadside
Rdwy.	Roadway
Rect.	Reticuline or Rectangular
Ref.	Reference
Reg.	Region, Regular, Registered or Regulation
Reinf.	Reinforced or Reinforcing
Reloc.	Relocated
Req.	Required
RPM	Raised Reflective Pavement Markers
r/s	Revolution Per Second
RR	Railroad
Rt.	Right
R/W, ROW	Right Of Way
S or s	Speed, South, Seimens, Or Second
SAN or San.	Sanitary
Sch.	Schedule
SCST	Sand–Clay Surface Treatment
SD	Side Drain, Storm Drain
SE	Southeast
Seq.	Sequential
Serv.	Service
SF	Silt Fence
Sht.	Sheet
Shldr.	Shoulder
SHW	Seasonal High Water
Spec.	Specification
Sq. Ft.,/S.F.	Square Foot
Sq. In.	Square Inch
Sq. Yd.,/S.Y.	Square Yard
SR or S.R.	State Road
SRD	State Road Department
SS	Sanitary Sewer
St. or ST.	Street
Sta.	Station
Std.	Standard
Stl.	Steel
Sub. or Subst.	Substitute
Subgr.	Subgrade
SUR or Sur.	Survey
Surf.	Surface
T	Tangent, Length Of Curve,
TBM	Temporary Bench Mark
TC	Tangent To Curve
TCB	Temporary Concrete Barrier
TCE	Temporary Construction Easement
TCP	Terra Cotta Pipe
TCZ	Traffic Control Zone
TDLC	Transportation Design For Livable Communities
Tel.	Telephone
Temp.	Temperature or Temporary
Thick.	Thickness
Tn.	Ton
Trans.	Transition, Transverse,
TS	Tangent To Spiral
TSC	Length Of Tangent (Spiral Curve)
TTC	Temporary Traffic Control
Typ.	Typical
Upass.	Underpass
UG	Underground
UL	Underwriters Laboratories
Ultd.	Unlimited
Unddr.	Underdrains
Undrdwy.	Underroadway
USC & GS	US Coast and Geodetic Survey
USGS	US Geological Survey
USPS	United States Postal Service
Util.	Utilities
V	Volt, Velocity, Volume or Hourly Volume
Var.	Varies, Variable or Variance
VC	Vertical Curve
VCP	Vitrified Clay Pipe
Vert.	Vertical
Vh	Verified Horizontal Location
Vol.	Volume
VP	Vertical Panel
VPD or Vpd.	Vehicles Per Day
VPH or Vph.	Vehicles Per Hour
VPHPL or Vphpl.	Vehicles Per Hour Per Lane
VRMS	Volts Root Mean Square
Vv	Verified Vertical Elevation
VW	Variable Width
W	Width, Wide, West or Watt
WB	Westbound
Wb.	Weber
WB40	Intermediate Semi Trailer
WB50	Large Semi Trailer
WB60	Tandem Semi Trailer
WM	Water Main
WT	Water Table Or Weight
WWF	Welded Wire Fabric
X	Coordinate Value (East–West Direction) or Extra
X Rd.	Cross Road
Xing.	Crossing
Xsec.	Cross Section
Y	Coordinate Value (North–South Direction)

GENERAL NOTES

CIVIL GENERAL NOTES:

1) ALL WORK SHALL BE PERFORMED IN A SAFE MANNER. ALL SAFETY RULES AND GUIDELINES OF O.S.H.A. SHALL BE PERFORMED. THE CONTRACTOR SHALL BE WHOLLY RESPONSIBLE FOR ANY INJURIES OF HIS EMPLOYEES, AND ANY DAMAGE TO PRIVATE PROPERTY OR PERSONS DURING THE COURSE OF THIS PROJECT. ALL COSTS ASSOCIATED WITH COMPLYING WITH O.S.H.A. REGULATIONS AND THE FLORIDA TRENCH SAFETY ACT (SEE NOTE 16) MUST BE INCLUDED IN THE CONTRACTOR'S PRICE FOR PERFORMING THE WORK.
2) THE CONTRACTOR SHALL BE RESPONSIBLE FOR VISITING THE JOB SITE PRIOR TO PREPARING THE BID FOR THE PURPOSE OF FAMILIARIZING HIMSELF WITH WITH THE NATURE AND THE EXTENT OF THE WORK AND LOCAL CONDITIONS, EITHER SURFACE OR SUBSURFACE, WHICH MAY AFFECT THE WORK TO BE PERFORMED, AND THE EQUIPMENT, LABOR AND MATERIALS REQUIRED. FAILURE TO DO SO WILL NOT RELIEVE THE CONTRACTOR OF COMPLETE PERFORMANCE UNDER THIS CONTRACT. THE CONTRACTOR IS URGED TO TAKE COLOR PHOTOGRAPHS ALONG THE ROUTE OF THIS PROJECT TO RECORD EXISTING CONDITIONS PRIOR TO CONSTRUCTION, AND TO AID IN RESOLVING POSSIBLE FUTURE COMPLAINTS THAT MAY OCCUR DUE TO CONSTRUCTION OF THE PROJECT.
3) ALL IMPROVEMENTS SHOWN ARE TO BE WARRANTED BY THE CONTRACTOR TO THE OWNER FOR A PERIOD OF ONE YEAR FROM DATE OF SUBSTANTIAL COMPLETION.
4) THE CONTRACTOR SHALL COORDINATE THEIR CONSTRUCTION WITH ALL OTHER CONTRACTORS. IN THE EVENT OF ANY CONFLICT WHATSOEVER, THE CONTRACTOR SHALL NOTIFY THE ENGINEER AND OWNER PRIOR TO PROCEEDING WITH CONSTRUCTION.
5) "AS–BUILT" DRAWINGS – AS–BUILT DRAWINGS ARE REQUIRED TO BE PROVIDED AND SIGNED AND SEALED BY A FLORIDA REGISTERED LAND SURVEYOR. THEREFORE, IT SHALL BE THE CONTRACTOR'S RESPONSIBILITY TO CONTRACT WITH A LAND SURVEYOR REGISTERED IN THE STATE OF FLORIDA FOR THE PREPARATION, FIELD LOCATIONS, CERTIFICATION, AND SUBMITTAL OF "AS–BUILT" DRAWINGS.
6) "AS–BUILT" RECORD DATA AND INFORMATION SHALL BE MAINTAINED BY THE CONTRACTOR. RECORD DRAWINGS SHALL BE SUPPLIED TO GEORGE & ASSOCIATES CONSULTING ENGINEERS, INC..
7) THE CONTRACTOR IS RESPONSIBLE FOR PROTECTION OF ALL SURVEY AND PROPERTY MONUMENTS. IF A MONUMENT IS DISTURBED, THE CONTRACTOR SHALL CONTRACT WITH THE SURVEYOR OF RECORD FOR REINSTALLATION OF THE MONUMENT.
8) ALL DEBRIS RESULTING FROM ALL ACTIVITIES SHALL BE DISPOSED OF OFF–SITE BY CONTRACTOR ON A WEEKLY BASIS.
9) ALL EXCESS UNSUITABLE MATERIAL SHALL BE REMOVED FROM THE SITE BY THE CONTRACTOR UNLESS DIRECTED OTHERWISE.
10) ALL EXISTING TREES TO REMAIN SHALL BE PRESERVED AND PROTECTED, EXCEPT FOR REMOVAL AS REQUIRED FOR CONSTRUCTION.
11) THE LOCATION OF ALL EXISTING UTILITIES, STRUCTURES, AND IMPROVEMENTS SHOWN ON THE DRAWINGS IS BASED ON LIMITED INFORMATION AND MAY NOT HAVE BEEN FIELD VERIFIED. THE LOCATIONS ARE APPROXIMATE. THE CONTRACTOR SHALL NOTIFY RESPECTIVE UTILITY OWNERS AND FIELD VERIFY LOCATIONS OF EXISTING UTILITIES AND OTHER IMPROVEMENTS PRIOR TO COMMENCING ANY CONSTRUCTION. IF THE LOCATIONS SHOWN ARE CONTRARY TO THE ACTUAL FIELD LOCATIONS, THE CONTRACTOR SHALL NOTIFY THE OWNER AND ENGINEER OF THE DISCREPANCY. THE DISCREPANCY SHOULD BE RESOLVED PRIOR TO COMMENCING CONSTRUCTION. THE CONTRACTOR SHALL EXERCISE EXTREME CAUTION WHEN WORKING IN AREAS NEAR EXISTING UTILITIES AND IMPROVEMENTS AND SHALL BE RESPONSIBLE FOR AND SHALL REPAIR OR PAY FOR ALL DAMAGE MADE TO EXISTING UTILITIES OR OTHER IMPROVEMENTS. PRIOR TO COMMENCEMENT OF ANY CONSTRUCTION, THE CONTRACTOR SHALL VERIFY ALL GRADES, INVERTS, AND TYPE OF MATERIAL OF EXISTING UTILITIES TO WHICH HE SHALL CONNECT.
12) THE CONTRACTOR SHALL SUBMIT SHOP DRAWINGS IF REQUIRED ON ALL MATERIALS, FOR REVIEW AND APPROVAL, PRIOR TO PURCHASE OR CONSTRUCTION OF ANY UTILITY PIPE OR STRUCTURE.
13) UNSUITABLE MATERIALS BENEATH WATER AND SEWER PIPE AND/OR STRUCTURES SHALL BE REMOVED AND REPLACED WITH SELECTED BACK FILL PROPERLY COMPACTED IN ACCORDANCE WITH SPECIFICATIONS.
14) ALL WATER & SEWER CONSTRUCTION SHALL BE ACCOMPLISHED BY AN UNDERGROUND UTILITY CONTRACTOR LICENSED UNDER THE PROVISIONS OF CHAPTER 489 FLORIDA STATUTES.
15) CONTRACTOR SHALL PROVIDE SEDIMENT AND EROSION CONTROL DURING THE ENTIRE DURATION OF THE PROJECT. ALL JURISDICTIONAL WETLANDS SHALL BE PROTECTED FROM SEDIMENTATION AND EROSION AS WELL AS ENCROACHMENT OF ANY KIND. ANY WETLAND JURISDICTIONAL LINES ARE SHOWN ON THE PLANS FOR REFERENCE. CONTRACTOR SHALL MEET THE REQUIREMENTS SET FORTH BY THE FLORIDA DEPARTMENT OF ENVIRONMENTAL PROTECTION AND THE U.S. ARMY CORPS OF ENGINEERS AS RELATED TO JURISDICTIONAL WETLANDS.
16) CONTRACTOR SHALL COMPLY WITH THE CURRENT FLORIDA TRENCH SAFETY ACT (90 96, LAWS OF FLORIDA) AND THE OSHA EXCAVATION SAFETY STANDARDS 29, CFR PART 1926.650 SUBPART P. WHERE TRENCH EXCAVATION EXCEEDS 5 FT IN DEPTH, SEE LAWS OF FLORIDA, CHAPTER 90–96.
    - A) THE CONTRACTOR SHALL PROVIDE WRITTEN ASSURANCE OF COMPLIANCE WITH THIS LAW.
    - B) A SEPARATE COST ITEM IDENTIFYING THE COST OF COMPLIANCE.
    - C) A TRENCH SAFETY SYSTEM SHALL BE DESIGNED BY THE CONTRACTOR.
17) CONTRACTOR SHALL COMPLY WITH STORM WATER POLLUTION PREVENTION PLAN. A COPY OF THIS PLAN AND FORMS ARE INCLUDED IN THE SPECIFICATIONS.

AS BUILT / RECORD DRAWINGS:

1) CONTRACTOR SHALL PROVIDE GEORGE & ASSOCIATES CONSULTING ENGINEERS TWO SIGNED AND SEALED COPIES OF AS–BUILT DRAWINGS OF ALL FINISHED IMPROVEMENTS.
2) CONTRACTOR SHALL PROVIDE GEORGE & ASSOCIATES CONSULTING ENGINEERS AS–BUILT DRAWINGS OF ALL FINISHED IMPROVEMENTS IN PDF AND DWG FORMAT.
3) AS–BUILT DRAWINGS TO BE PERFORMED AND CERTIFIED BY A FLORIDA LICENSED PROFESSIONAL LAND SURVEYOR.
4) AS–BUILT DRAWINGS SHALL BE SUBMITTED AFTER COMPLETION OF ALL IMPROVEMENTS AND PRIOR TO FINAL INSPECTION.
5) AS BUILT DRAWINGS SHALL INCLUDE, BUT NOT BE LIMITED TO:
    - A. FINISHED FLOOR ELEVATIONS FOR ALL BUILDINGS.
    - B. SHOW ENTIRE SANITARY SEWER CONVEYANCE SYSTEM INCLUDING THE SIZE TYPE AND INVERT OF ALL PIPES AND MANHOLES. MANHOLES SHALL INCLUDE "X" AND "Y" COORDINATES.
    - C. SHOW ENTIRE POTABLE WATER SYSTEM INCLUDING THE SIZE AND TYPE OF ALL PIPES AND LOCATIONS OF APPURTENANCES.
    - D. SHOW ENTIRE FIRE WATER SYSTEM INCLUDING THE SIZE AND TYPE OF ALL PIPES AND LOCATIONS OF APPURTENANCES.
    - E. SHOW ENTIRE STORM WATER CONVEYANCE SYSTEM INCLUDING THE SIZE TYPE AND INVERT OF ALL PIPES, CHANNELS, ROOF DRAIN SYSTEMS, STRUCTURES, CURBING AND SPOT SHOT ELEVATIONS IN VEHICLE USE AREAS. DRAINAGE STRUCTURES SHALL INCLUDE "X" AND "Y" COORDINATES.
    - F. SHOW ALL SIDEWALK AND VEHICLE USE AREAS. PROVIDE ADEQUATE SPOT ELEVATIONS TO VERIFY ADA COMPLIANCE FOR REVIEW BY ENGINEER AND ADA COMPLIANCE REPORT.
    - G. SHOW ALL TRAFFIC CONTROL DEVICES INCLUDING SIGNS, SIGNALS, PARKING STRIPPING AND PAVEMENT MARKINGS.
    - H. SITE DATA TABLE TO INCLUDE IMPERVIOUS AREAS, URBAN FOREST AREAS, GREEN SPACE AREAS, AND NUMBER OF PARKING SPACES.
    - I. POST CONSTRUCTION TREE SURVEY INCLUDING LOCATION, SIZE AND SPECIES OF ALL EXISTING AND NEW TREES INCLUDING URBAN FOREST AND REPLANTED TREES AND IRRIGATION SYSTEMS.
    - J. DELINEATE CONSERVATION AND DRAINAGE EASEMENT BOUNDARIES AND LABEL WITH THE "OR" BOOK AND PAGE NUMBER.
    - K. POST DEVELOPMENT SITE DATA TABLE INCLUDING IMPERVIOUS AREA, URBAN FOREST AREA, GREEN SPACE AREA, NUMBER OF STANDARD PARKING STALLS, NUMBER ADA PARKING STALLS PROVIDED.
    - L. DELINEATE ALL UTILITIES CAPPED WITH "X" "Y" "Z" COORDINATES.
    - M. ANY ADDITIONAL ITEMS REQUIRED BY PERMITTING JURISDICTION.

DESIGN STANDARDS:

1. UNLESS OTHERWISE INDICATED OR MODIFIED ON THE PLANS OR IN THE SPECIFICATIONS, THE FLORIDA DEPARTMENT OF TRANSPORTATION STANDARD SPECIFICATIONS FOR ROAD AND BRIDGE CONSTRUCTION, LATEST EDITION, SHALL BE THE GOVERNING SPECIFICATIONS FOR CONSTRUCTION MATERIALS AND SITE WORK.
2. WHERE REFERENCE IS MADE TO A STANDARD INDEX OR DETAIL, THE FLORIDA DEPARTMENT OF TRANSPORTATION ROADWAY AND TRAFFIC DESIGN STANDARDS, LATEST EDITION, SHALL BE USED AS IF A PART OF THIS PLAN.

CONSTRUCTION SEQUENCE:

1. CONSTRUCT EROSION AND SEDIMENT CONTROL PRACTICES AS DESCRIBED IN THE APPROVED EROSION CONTROL PLAN.
2. ESTABLISH MAINTENANCE OF TRAFFIC PLAN WITH PARK MANAGER.
3. CONTRACTOR SHALL PROVIDE CONSTRUCTION SEQUENCE TO FDEP, PARK MANAGER, ENGINEER AND ARCHAEOLOGIST. ARCHAEOLOGIST IS REQUIRED ON–SITE DURING ALL LAND DISTURBING ACTIVITIES. CONTRACTOR SHALL NOTIFY ENGINEER OF RECORD AND ARCHAEOLOGIST 24–HOURS PRIOR TO ANY LAND DISTURBING ACTIVITIES.
4. CONTRACTOR ESTABLISH AND BEGIN WELL POINTING/DEWATERING.
5. DESIGNATE EMPLOYEE PARKING AREAS, MATERIALS STORAGE AREAS, AND TOPSOIL STORAGE AREAS.
6. CONSTRUCT ALL IMPROVEMENTS AS INDICATED IN THE PLANS AND SPECIFICATIONS.
7. REMOVE ALL STOCKPILE FROM SITE, INSTALL LANDSCAPING. SOD ALL DISTURBED AREAS.
8. PRIOR TO FINAL CLOSE–OUT, THE CONTRACTOR SHALL FURNISH THE ENGINEER AND THE OWNER'S PROJECT MANAGER WITH SIGNED AND SEALED COPIES OF THE AS–BUILT SURVEY AND A COMPLETE SET OF RECORD DOCUMENTS.
9. FIELD INSPECTION AND CLEAN UP.

SITE SPECIFIC NOTES:

1. TREES WILL BE REMOVED VIA LINE RIGGING AND FELLING SMALL SECTIONS TO PREVENT ANY DAMAGE TO THE GROUNDS OR THE CULTURAL RESOURCES. LINE RIGGING WILL BE COMPLETE BY MEANS OF SPURS AND PHYSICAL CLIMBING OF TREES OR WITH THE USE OF A MAN–LIFT.

2. TREES WILL BE CUT AT GROUND SURFACE LEVEL. GRIND STUMPS TO SURFACE LEVEL ONLY, NOT BELOW SURFACE.

3. NO TREES WILL BE FELLED WHOLE OR IN LARGE SECTIONS THAT COULD DAMAGE THE GROUNDS.

4. ALL TREE DEBRIS WILL BE CLEANED UP AND REMOVED.

BUREAU OF DESIGN CONSTRUCTION NOTES:

1. THE CONTRACTOR IS RESPONSIBLE FOR INSPECTING AND ACCEPTING THE EXISTING CONDITIONS OF THE SITE PRIOR TO BIDDING.

2. ALL DISTURBED AREAS WITHIN THE LIMITS OF RESTORATION SHALL BE REVEGETATED AS SPECIFIED BY THE PARK SERVICE BIOLOGIST.

3. EXISTING UNDERGROUND UTILITIES SHOWN ARE BASED ON THE BEST AVAILABLE INFORMATION. THE CONTRACTOR SHALL ENSURE THAT THE UTILITY SYSTEMS DO NOT CONFLICT WITH THE PROPOSED PROJECT. CONFLICTS SHALL BE REPORTED TO THE PROJECT MANAGER IMMEDIATELY.

4. THE CONTRACTOR IS RESPONSIBLE FOR THE PROTECTION OF ALL UTILITIES. REMOVAL AND/OR RELOCATION OF EXISTING UTILITIES IN CONFLICT WITH THE WORK, CONSTRUCTION OF TEMPORARY UTILITIES IN THE EVENT THAT EXISTING UTILITY SERVICE MUST BE INTERRUPTED AND ANY OTHER CONSTRUCTION RELATED ACTIVITIES THAT MAY AFFECT EXISTING OR PROPOSED UTILITIES. THE INFORMATION SHOWN ON THESE DRAWINGS CONCERNING TYPE AND LOCATION OF UNDERGROUND AND OTHER UTILITIES IS BASED ON INFORMATION PROVIDED BY THE UTILITY OWNERS, AVAILABLE RECORDS, AND SURVEYED FIELD INFORMATION. THE INFORMATION MAY NOT REFLECT ACTUAL CONDITIONS, INCLUDE ALL UTILITIES IN THE AREA, EITHER IN SERVICE OR ABANDONED, OR SHOW THE UTILITIES IN THE CORRECT HORIZONTAL OR VERTICAL LOCATIONS. THE CONTRACTOR WILL MAKE IS OWN DETERMINATION AS TO THE TYPE AND LOCATION OF UTILITIES AS NECESSARY TO ESTABLISH THEIR LOCATIONS AND AVOID DAMAGE.

5. THE CONTRACTOR SHALL BE RESPONSIBLE FOR ESTABLISHING ALL GRADE STAKES, LINES AND LEVELS.

6. THE CONTRACTOR SHALL SOLID SOD ALL DISTURBED AREAS UNLESS OTHERWISE SPECIFIED OR SHOWN. SOD CONTAINING MESH REINFORCEMENT IS NOT ALLOWED.

7. NO SEPARATE PAYMENT WILL BE MADE FOR DEWATERING. THE COSTS FOR DEWATERING ARE INCLUDED IN THE UNIT PRICES FOR CONSTRUCTING THIS PROJECT.

8. ALL AREAS, STREETS, DRIVEWAYS, PARKING LOTS, ETC. DISTURBED BY CONSTRUCTION SHALL BE RESTORED BY THE CONTRACTOR TO THEIR ORIGINAL OR BETTER CONDITION.

9. THE CONTRACTOR WILL HAVE ALL REQUIRED PERMITS IN–HAND PRIOR TO BEGINNING CONSTRUCTION, AND WILL PERFORM ALL WORK IN ACCORDANCE WITH THE REQUIREMENTS OF THE PERMITS OBTAINED BY THE OWNER AND THOSE PERMITS OBTAINED BY THE CONTRACTOR.

10. PRIOR TO COMMENCING CONSTRUCTION, THE CONTRACTOR WILL SUBMIT TO THE OWNER'S PROJECT MANAGER A SCHEDULE OF VALUES, A CONSTRUCTION SCHEDULE, AND A SAFETY PLAN.

11. THE CONSTRUCTION SCHEDULE WILL DESCRIBE IN DETAIL HOW THE CONSTRUCTION IS TO BE PHASED, ESTABLISH START AND FINISH DATES FOR ALL SIGNIFICANT CONSTRUCTION ACTIVITIES, AND IDENTIFY ALL CONTROLLING ITEMS OF WORK. THE SCHEDULE IS TO BE APPROVED BY THE OWNER'S PROJECT MANAGER, AND WILL BE UPDATED ON A MONTHLY BASIS TO REFLECT ACTUAL WORK PROGRESS. PAYMENT FOR PREPARING, UPDATING AND SUBMITTING THE SCHEDULE WILL BE INCLUDED IN THE PAY ITEM FOR MOBILIZATION OR OTHER PAY ITEMS AS APPROPRIATE.

12. THE CONTRACTOR SHALL SUBMIT AN EROSION CONTROL PLAN FOR APPROVAL BY THE OWNER'S PROJECT MANAGER AND WILL ADDRESS THE INSTALLATION AND MAINTENANCE OF ALL TEMPORARY AND PERMANENT SEDIMENT AND EROSION CONTROL DEVICES TO BE USED DURING EACH PHASE OF CONSTRUCTION, INCLUDING TREE REMOVAL, CLEARING AND GRUBBING, EXCAVATION, HAULING OF EXCAVATED MATERIALS, AND PLACEMENT OF EMBANKMENT AND BACKFILL. THE PLAN ALSO WILL DETAIL THE EROSION CONTROL MEASURES TO BE EMPLOYED AT ALL STOCKPILE AND CONSTRUCTION STAGING AREAS AND WILL DEFINE THE MAXIMUM LIMITS OF ALL ACTIVE CONSTRUCTION ZONES.

13. ANY NATIONAL GEODETIC SURVEY MONUMENT WITHIN THE LIMITS OF CONSTRUCTION MUST BE PROTECTED. IF IN DANGER OF DAMAGE, THE CONTRACTOR WILL IMMEDIATELY NOTIFY THE PROJECT MANAGER AND:

FDEP, BUREAU OF SURVEY AND MAPPING, MS 105
3900 COMMONWEALTH BLVD.
TALLAHASSEE, FLORIDA 32399
(850) 245–2606 (OFFICE)
(850) 245–2645 (FAX)

14. PRIOR TO ANY SCHEDULED INTERRUPTION OF UTILITY SERVICE, THE CONTRACTOR WILL COORDINATE SUCH INTERRUPTION WITH THE UTILITY PROVIDER AND WILL PROVIDE A MINIMUM 24–HOUR NOTICE TO THE AFFECTED PARTIES. THE CONTRACTOR WILL NOTIFY THE ELECTRIC UTILITY A MINIMUM OF TWO WEEKS PRIOR TO CONSTRUCTION IN THE VICINITY OF THEIR FACILITIES.

15. NO TRENCHES WILL BE ALLOWED TO REMAIN OPEN OVERNIGHT.

16. THE CONTRACTOR IS RESPONSIBLE FOR THE PROTECTION OF VEGETATION ON AND ADJACENT TO THE PROJECT SITE, AND WILL BE SOLELY LIABLE FOR DAMAGE TO VEGETATION ON PROPERTIES ADJACENT TO CONSTRUCTION WORK ZONES. ALL TREES WITHIN THE LIMITS OF CONSTRUCTION ARE TO BE PROTECTED EXCEPT THOSE TREES IDENTIFIED ON THE PLANS TO BE REMOVED. ALL TREES OUTSIDE THE CONSTRUCTION WORK ZONE ARE TO BE PROTECTED TO THE MAXIMUM EXTENT PRACTICABLE. TREE BARRICADES WILL BE INSTALLED AND MAINTAINED AROUND ALL TREES TO BE PROTECTED AS SHOWN ON THE DRAWINGS OR AS DIRECTED BY THE PROJECT MANAGER.

17. THE CONTRACTOR IS RESPONSIBLE TO PLACE AND MAINTAIN ROADSIDE WARNING SIGNS WHEN WORK IS BEING CONDUCTED IN THE PROPERTY RIGHT OF WAY OR WHEN MACHINERY IS ENTERING AND LEAVING THE PROJECT SITE.

18. THE CONTRACTOR IS RESPONSIBLE FOR DISPOSAL OF EXCAVATED MATERIAL OFF–SITE UNLESS OTHERWISE DIRECTED BY THE PROJECT MANAGER.

19. ENSURE THAT ALL EQUIPMENT, PRIOR TO BRINGING ON–SITE, IS WASHED AND FREE OF SOIL, SEED, OR OTHER ORGANIC MATTER. EQUIPMENT MAY BE INSPECTED BY THE OWNER'S REPRESENTATIVE PRIOR TO OFF–LOADING FOR USE. ADDITIONAL CLEANING WILL BE PERFORMED BY THE CONTRACTOR IF THE OWNER'S REPRESENTATIVE DETERMINES IT IS NEEDED.

ADA COMPLIANCE NOTES

THE CONTRACTOR & OWNER WILL BE HELD ACCOUNTABLE DURING CONSTRUCTION FOR ALL SITE IMPROVEMENTS. COMPLIANCE WITH FLORIDA STATUTES 553.5041 (F.S.), AND THE 2020 FLORIDA BUILDING CODE, ACCESSIBILITY, 7TH EDITION (FBC–A), IS MANDATORY. IF NON–COMPLIANT AT FINAL INSPECTION, CONTRACTOR WILL BE REQUIRED TO MODIFY CONSTRUCTION TO COMPLY WITH F.S. AND FBC–A. THE FOLLOWING ITEMS TAKE PRECEDENCE AND SUPERSEDE OTHER SITE DETAILS ON DRAWINGS:

1. ACCESSIBLE PARKING SPACES SHALL BE LOCATED ON AN ACCESSIBLE ROUTE NO LESS THAN 44 " WIDE SO THAT USERS WILL NOT BE COMPELLED TO WALK OR WHEEL BEHIND PARKED VEHICLES EXCEPT BEHIND HIS OR HER OWN VEHICLE. §208.1 AND §502.3, FBC–A AND F.S. 553.5041.
2. ACCESSIBLE PARKING SPACES AND ACCESS AISLES SERVING A PARTICULAR BUILDING SHALL BE LOCATED ON THE SHORTEST ACCESSIBLE ROUTE FROM THE ACCESSIBLE (H/C) PARKING TO AN ACCESSIBLE ENTRANCE. §208.3.1 FBC–A AND F.S. 553.5041(5)(B).
3. ACCESSIBLE PARKING SPACES SHALL BE 12' WIDE , AND OUTLINED WITH BLUE PAINT. §502.2 AND §502.6, FBC–A
4. ACCESS AISLES REQUIRED ADJACENT TO PARKING SPACES SHALL BE 5' WIDE WITH DIAGONAL STRIPING. §502., FBC–A
5. ACCESSIBLE PARKING AND ACCESS AISLES SHALL BE LEVEL (NOT TO EXCEED 1:48) ON A STABLE FIRM & SLIP RESISTANT SURFACE. RE: §302.1, §502.3. FBC–A
6. ACCESSIBLE PARKING SIGNS SHALL BE FDOT APPROVED AND SHALL READ 'PARKING BY DISABLED PERMIT ONLY' AND SHALL INDICATE A $250 FINE FOR ILLEGAL USE. INSTALL SIGNS A MINIMUM 60"(INCHES) FROM THE GROUND TO THE BOTTOM OF THE SIGN(S). RE: §502.6 AND F.S 553.5041.
7. CURB RAMPS SHALL NOT EXCEED 1:12 SLOPE, AND CURB RAMP FLARES SHALL NOT EXCEED 1:10 SLOPE. CURB RAMPS AND FLARED SIDES SHALL NOT ENCROACH UPON PARKING SPACES, ACCESS AISLES, OR VEHICULAR TRAFFIC LANES. THE COUNTER SLOPE OF ADJACENT ROAD SURFACES & GUTTERS SHALL NOT EXCEED 1:20. RE: §405.2, §406., FBC–A
8. CURB RAMPS SHALL HAVE A LANDING WITH A MINIMUM CLEAR LENGTH OF 36" SHALL BE LOCATED AT THE TOP SIDE OF EACH CURB RAMP, A CLEAR WIDTH AT LEAST AS WIDE AS THE CURB RAMP (EXCLUDING FLARED SIDES) LEADING TO IT. EXCEPTION: FOR ALTERATIONS, WHERE THERE IS NO LANDING, CURB RAMP FLARES SHALL BE PROVIDED, AND SHALL NOT BE STEEPER THAN 1:12 SLOPE. RE: §406, FBC–A
9. ALL RAMPS WITH A RISE GREATER THAN 6" SHALL PROVIDE EDGE PROTECTION COMPLYING WITH §405.9 FACBC. RAMPS SHALL HAVE 60" MIN LEVEL LANDINGS AT THE TOP & BOTTOM. RE: §405.7. FBC–A.
10. ALL RAMPS WITH A RISE GREATER THAN 6" SHALL PROVIDE EDGE PROTECTION COMPLYING WITH §405.9 FACBC. RAMPS SHALL HAVE 60" MIN LEVEL LANDINGS AT THE TOP & BOTTOM. RE: §405.7. FBC–A.
11. ACCESSIBLE ROUTES TO "MAIN ENTRY" FROM AN ACCESSIBLE PARKING SPACE, AND FROM THE "PUBLIC WAY", SHALL NOT EXCEED 1:20 SLOPE (UNLESS RAMPS, HANDRAILS WITH PROPER EXTENSIONS ARE PROVIDED) WITH CROSS SLOPE NOT IN EXCESS OF 1:48. RE: §206, §402 AND §403., FBC–A.
12. *CONNECT BUILDINGS WITHIN THE SAME SITE WITH AN ACCESSIBLE ROUTE WHICH SHALL NOT EXCEED 1:20 SLOPE (UNLESS RAMPS AND HANDRAILS ARE PROVIDED) AND A MAXIMUM CROSS SLOPE OF 1:48. RE: §206 FBC–A.

* CONNECT BUILDINGS WITHIN THE SAME SITE WITH AN ACCESSIBLE ROUTE WHICH SHALL NOT EXCEED 1:20 SLOPE (UNLESS RAMPS AND HANDRAILS ARE PROVIDED) AND A MAXIMUM CROSS SLOPE OF 1:48. RE: §206 FBC–A.

INDEX	
Sheet Number	Sheet Title
C 002	GENERAL NOTES
C 101	EXISTING CONDITIONS
C 201	DEMOLITION & EROSION CONTROL PLAN
C 301	OVERALL SITE-UTILITY PLAN
C 302	ENLARGED SITE-UTILITY PLAN
C 303	GRAVITY SEWER PLAN AND PROFILE
C 401	DETAILS
C 402	DETAILS
C 403	LIFT STATION DETAILS

GENERAL PROJECT NOTES:

1) ALL UNDERGROUND UTILITIES SHALL BE FIELD LOCATED PRIOR TO THE BEGINNING OF CONSTRUCTION. CALL "ONE CALL" (1–800–432–4770)
2) CONTRACTOR SHALL MAINTAIN SUITABLE SEDIMENTATION AND EROSION STRUCTURES DURING ALL PHASES OF CONSTRUCTION.
3) CONTRACTOR SHALL PROVIDE ADEQUATE SIGNAGE TO DIRECT TRAFFIC AROUND CONSTRUCTION AREAS. ADEQUACY OF SIGNAGE SHALL BE APPROVED PRIOR TO CONSTRUCTION START. CONTRACTOR SHALL BE RESPONSIBLE FOR REMOVAL OF UNFORESEEN MATERIALS
4) CONTRACTOR SHALL BE RESPONSIBLE FOR ALL ASPECTS OF JOB SITE SAFETY INCLUDING, BUT NOT LIMITED TO TEMPORARY FENCING, UTILIZATION OF MACHINERY WITH BRAKES, WARNING SIGNAGE ETCETERA.
5) CONTRACTOR IS RESPONSIBLE TO COMPLETELY REMOVE ALL DEMOLISHED MATERIALS NOT BEING SALVAGED FROM SITE AND DISPOSE OF PROPERLY.
6) CONTRACTOR SHALL MAINTAIN A MINIMUM SLOPE OF 1.00% ON ALL IMPROVEMENTS. IF PROPOSED SLOPE IS LESS THAN 1.00% CONTRACTOR SHALL NOTIFY ENGINEER OF RECORD IMMEDIATELY.
7) ALL DAMAGED DRIVEWAYS AND PAVING SHALL BE RESTORED TO ORIGINAL CONDITION PER FDOT STANDARDS.
8) ALL RESTORATION OF UNPAVED AREAS SHALL BE WITH SOD. RESTORATION SHALL BE REVEGETATED AS SPECIFIED BY FDEP PARK SERVICE BIOLOGIST.
9) MAINTENANCE OF TRAFFIC SHALL CONFORM TO FLORIDA DEPARTMENT OF TRANSPORTATION STANDARD PLANS FOR ROAD CONSTRUCTION, CURRENT EDITION.
10) CONTRACTOR SHALL POST SIGN THAT STATES THE FOLLOWING: "THIS AREA IS A DESIGNATED CONSTRUCTION SITE, AND ANYONE WHO TRESPASSES ON THIS PROPERTY COMMITS A FELONY".
11) ADDITIONAL FILTER FENCES OR HAY BALES SHALL BE CONSTRUCTED AS NECESSARY, IN ADDITION TO THOSE SHOWN, TO PROTECT ADJACENT PROPERTY FROM SEDIMENTATION DURING CONSTRUCTION. ALL STOCKPILE AREAS SHALL BE SURROUNDED BY SILT FENCE. TEMPORARY BERMS SHALL BE CONSTRUCTED OR GRADING CONSTRUCTED AS NECESSARY TO DIRECT RUNOFF TO THE S.W.M.F. PRIOR TO INSTALLATION OF DRAINAGE PIPES.
12) IT'S THE CONTRACTOR'S RESPONSIBILITY TO ENSURE THAT THE HANDICAP RAMPS AND ACCESSIBLE WALKWAYS BE CONSTRUCTED IN ACCORDANCE WITH THE DESIGNATED DETAILS AND USE THE CURRENT FDOT INDEX THAT IS REFERENCED ON THE CONSTRUCTION PLANS. UPON LAYOUT OF PROPOSED RAMPS OR ACCESSIBLE WALKWAY IF THE CONTRACTOR IDENTIFIES A CONFLICT WITH THE REQUIRED STANDARDS IT WILL BE THE CONTRACTOR' RESPONSIBILITY NOTIFY THE ENGINEER PRIOR TO CONSTRUCTION SO APPROPRIATE FIELD ADJUSTMENTS CAN BE PROVIDED. IF THE CONTRACTOR DOES NOT NOTIFY THE ENGINEER THEN IT WILL BE THE CONTRACTOR'S RESPONSIBILITY TO RECONSTRUCT THE RAMPS OR ACCESSIBLE WALKWAY AT THE CONTRACTOR'S EXPENSE IN ACCORDANCE WITH THE STANDARD DETAILS.

SURVEY NOTES:

1. SURVEY WAS PERFORMED FOR THIS PROJECT BY S. STINSON & ASSOCIATES, INC., 147 JOHNNY RD. LAMONT, FL 32336, PSM STEVEN W. STINSON NO. 5457, WITH A SIGNED DATE OF MARCH 3, 2022 & SEPTEMBER 18, 2023.

2. HORIZONTAL LOCATION IS BASED ON STATE PLANE COORDINATES, FLORIDA NORTH PROJECTION, NAD83 DATUM, THE ELEVATIONS SHOWN HEREON ARE BASED ON NAVD88 VERTICAL DATUM ESTABLISHED FROM FDOT BENCHMARK '10–75–A38' AND '52–21–A05'.

EROSION CONTROL NOTES:

1. ALL EROSION AND SEDIMENTATION CONTROLS SHALL BE INSTALLED PRIOR TO ANY LAND DISTURBING ACTIVITIES.

2. ALL EROSION AND SEDIMENTATION CONTROLS SHALL BE INSPECTED DAILY AND REPAIRS MADE AS NECESSARY TO ENSURE THE PROPER AND CONTINUED FUNCTION OF THE CONTROL(S).

3. ALL EROSION AND SEDIMENTATION CONTROL SHALL REMAIN IN PLACE UNTIL A PERMANENT VEGETATIVE COVER HAS BEEN ESTABLISHED.

4. UNDER NO CIRCUMSTANCES SHALL SEDIMENTS BE PERMITTED TO EXIT THE PROJECT LIMITS, INCLUDING TRACKING BY VEHICLES ONTO PAVED ROADWAYS. THE CONTRACTOR SHALL MAKE IMMEDIATE REPAIRS OR ENHANCEMENTS TO ANY EROSION CONTROL SYSTEM THAT ALLOWS THE RELEASE OF SEDIMENTS.

SHANNON E. HUFTY LICENSE No 91838 STATE OF FLORIDA PROFESSIONAL ENGINEER

GEORGE & ASSOCIATES CONSULTING ENGINEERS, INC.
1967 COMMONWEALTH LANE, SUITE 200
TALLAHASSEE, FL 32303
CERTIFICATE OF AUTHORIZATION: 7879
SHANNON E. HUFTY, P.E. NO. 91838

THIS ITEM HAS BEEN DIGITALLY SIGNED AND SEALED BY SHANNON E. HUFTY, P.E. ON THE DATE ADJACENT TO THE SEAL.

PRINTED COPIES OF THIS DOCUMENT ARE NOT CONSIDERED SIGNED AND SEALED AND THE SIGNATURE MUST BE VERIFIED ON ANY ELECTRONIC COPIES.

Department of Environmental Protection
Division of Recreation and Parks
Bureau of Design and Construction
3900 Commonwealth Boulevard, Tallahassee, FL 32399 (850) 245–2118

DATE | REVISION | SYMBOL | DATE | REVISION | SYMBOL

ISSUE DATE: 10/06/2023
COMP. FILE No.: 22–5482
STATE PROJECT No.: 61354C

DESIGNER : SEH
DRAWN BY: KRM
REVIEWED BY: SEH

Consultant : DODSTONE ARCHITECTS 3011-1 Powell Road | Tallahassee, FL 32308 850.656.7326 | #AA26001632

PROFESSIONAL REGISTRATION
SHANNON E. HUFTY
State of Florida P.E. # 91838

PONCE DE LEON SPRINGS STATE PARK

SHEET TITLE: GENERAL NOTES

PROJECT TITLE: RESTROOM IMPROVEMENTS

SHEET NO. C 002

KMANN October 3, 2023 P:\Projects\22-5482 DGA Ponce De Leon SP Restroom Improvements\Drawings\Civil\C 002 General Notes.dwg

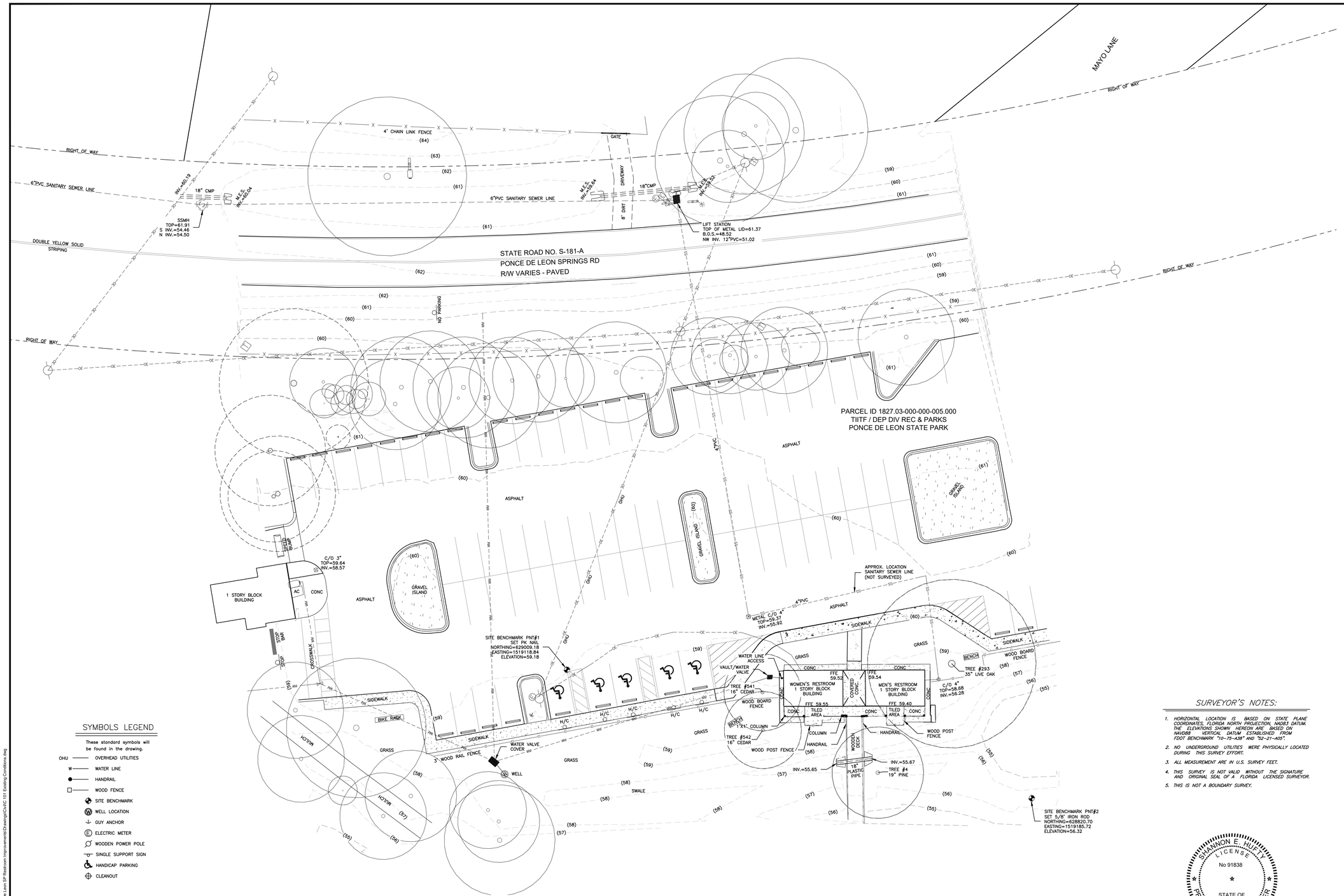

SYMBOLS LEGEND

These standard symbols will be found in the drawing.

- OHU — OVERHEAD UTILITIES
- W — WATER LINE
- HANDRAIL
- WOOD FENCE
- SITE BENCHMARK
- WELL LOCATION
- GUY ANCHOR
- ELECTRIC METER
- WOODEN POWER POLE
- SINGLE SUPPORT SIGN
- HANDICAP PARKING
- CLEANOUT

20 0 10 20

1 inch = 20 ft.

EXISTING CONDITIONS

SCALE: 1" = 20'

SURVEYOR'S NOTES:

1. HORIZONTAL LOCATION IS BASED ON STATE PLANE COORDINATES, FLORIDA NORTH PROJECTION, NAD83 DATUM. THE ELEVATIONS SHOWN HEREON ARE BASED ON NAVD88 VERTICAL DATUM ESTABLISHED FROM FDOT BENCHMARK "10-75-A38" AND "52-21-A05".
2. NO UNDERGROUND UTILITIES WERE PHYSICALLY LOCATED DURING THIS SURVEY EFFORT.
3. ALL MEASUREMENT ARE IN U.S. SURVEY FEET.
4. THIS SURVEY IS NOT VALID WITHOUT THE SIGNATURE AND ORIGINAL SEAL OF A FLORIDA LICENSED SURVEYOR.
5. THIS IS NOT A BOUNDARY SURVEY.

SHANNON E. HUFTY
LICENSE
No 91838
STATE OF FLORIDA
PROFESSIONAL ENGINEER

GEORGE & ASSOCIATES CONSULTING ENGINEERS, INC.
1967 COMMONWEALTH LANE, SUITE 200
TALLAHASSEE, FL 32303
CERTIFICATE OF AUTHORIZATION: 7879
SHANNON E. HUFTY, P.E. NO. 91838

THIS ITEM HAS BEEN DIGITALLY SIGNED AND SEALED BY SHANNON E. HUFTY, P.E. ON THE DATE ADJACENT TO THE SEAL.

PRINTED COPIES OF THIS DOCUMENT ARE NOT CONSIDERED SIGNED AND SEALED AND THE SIGNATURE MUST BE VERIFIED ON ANY ELECTRONIC COPIES.

SYMBOL	REVISION	DATE	SYMBOL	REVISION	DATE

Department of Environmental Protection
Division of Recreation and Parks
Bureau of Design and Construction
3900 Commonwealth Boulevard, Tallahassee, FL 32399 (850) 245-2118

ISSUE DATE: 10/06/2023
COMP. FILE No: 22-5482
STATE PROJECT No: 61354C

DESIGNER: SEH
DRAWN BY: KRM
REVIEWED BY: SEH
Consultant:

DODSTONE ARCHITECTS
3011-1 Powell Road | Tallahassee, FL 32308
850.656.7326 | #AA26001652

PROFESSIONAL REGISTRATION
SHANNON E. HUFTY
State of Florida P.E. # 91838

PONCE DE LEON SPRINGS STATE PARK

SHEET TITLE: EXISTING CONDITIONS

PROJECT TITLE: RESTROOM IMPROVEMENTS

SHEET NO. C 101

KMANN October 4, 2023 P:\Projects\22-5482 DOA Ponce De Leon SP Restroom Improvements\Drawings\Civil\C 101 Existing Conditions.dwg

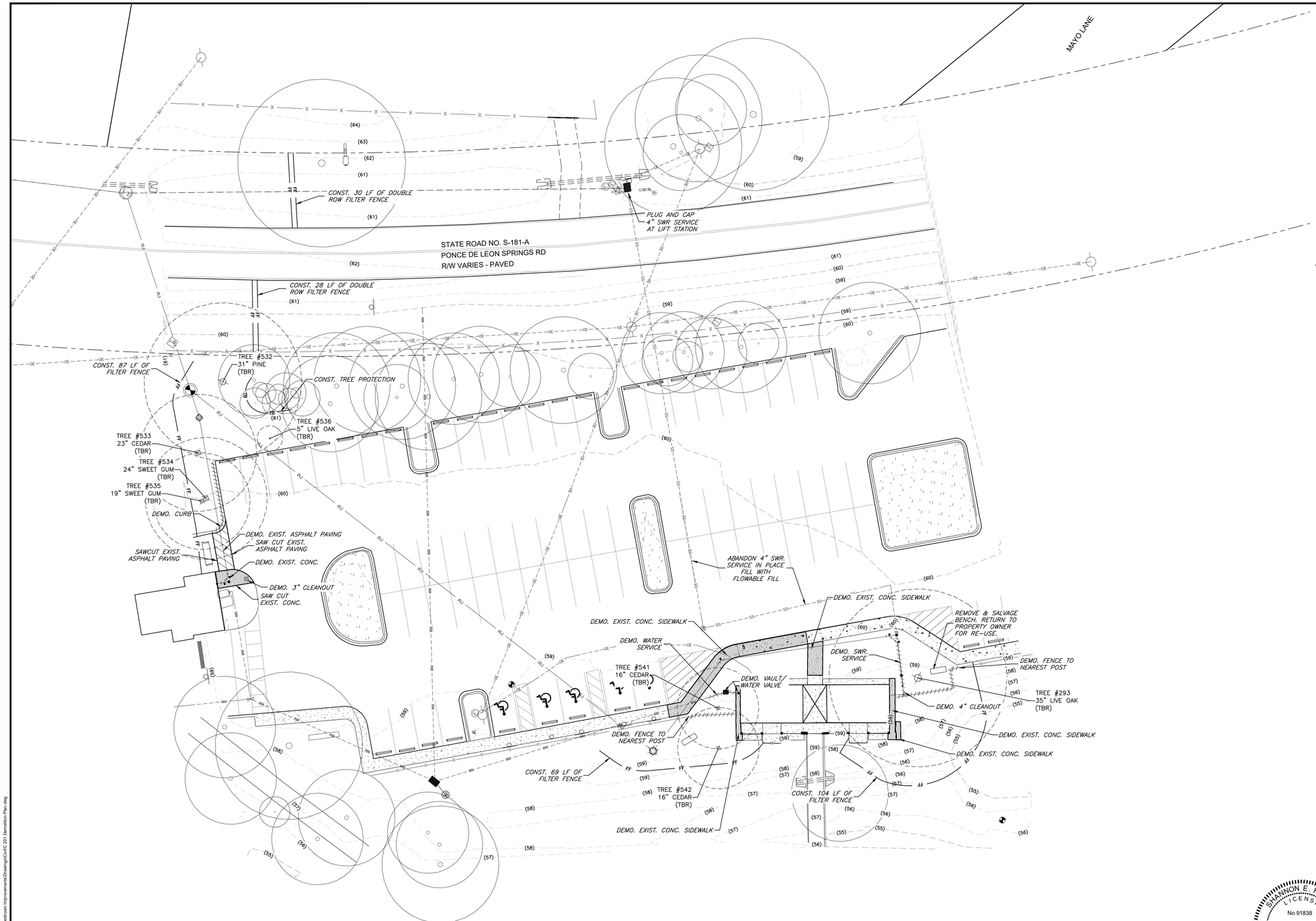

LEGEND

- DOUBLE FILTER FENCE
- FILTER FENCE
- DEMO. FENCE/UTILITY
- DEMO. CONCRETE

TREE LEGEND

- TREE CANOPY — TREE TO REMAIN
- TREE CANOPY — TREE TO BE REMOVED (TBR)

DEMO NOTES:

1. THIS SITE MAY CONTAIN EXISTING UTILITY LINES, UTILITY STRUCTURES AND MISCELLANEOUS UTILITY EQUIPMENT THAT MAY NOT HAVE BEEN SURVEYED AND IN CONFLICT WITH PROPOSED CONSTRUCTION. IT IS THE RESPONSIBILITY OF THE CONTRACTOR TO LOCATE ALL UTILITIES WITHIN PROJECT AREA PRIOR TO CONSTRUCTION.
2. ALL UTILITIES MUST REMAIN IN OPERATION THROUGHOUT CONSTRUCTION ACTIVITIES FOR THIS PROJECT. FOR ANY REASON THERE IS AN ANTICIPATED DISRUPTION IN SERVICE, COORDINATE WITH DEP PROJECT MANAGER TWO WEEKS IN ADVANCE.
3. CONTRACTOR TO COORDINATE WITH UTILITY PROVIDER(S) AND CIVIL ENGINEER FOR ANY AND ALL UTILITIES THAT MAY BE IN CONFLICT WITH PROPOSED CONSTRUCTION ACTIVITIES.
4. WHERE EXISTING ITEMS SUCH AS ASPHALT, CONCRETE CURB AND GUTTER, ETC. ARE SHOWN TO BE REMOVED. THESE ITEMS SHALL BE SAWCUT.
5. CONTRACTOR TO VERIFY ALL DEPTHS OF EXISTING UNDERGROUND UTILITIES PRIOR TO CONSTRUCTION.
6. CONTRACTOR IS RESPONSIBLE FOR THE REMOVAL, RELOCATION AND DEMOLITION IN ORDER TO CONSTRUCT THE PROPOSED PROJECT IMPROVEMENTS WHETHER CALLED OUT FOR REMOVAL OR NOT.
7. CONTRACTOR RESPONSIBLE TO ADJUST ALL UTILITIES AND VALVES TO FINISH GRADE.
8. CONTRACTOR RESPONSIBLE TO DEFLECT ANY UTILITIES NECESSARY TO CONSTRUCT PROPOSED IMPROVEMENTS.
9. CONTRACTOR RESPONSIBLE FOR ANY DAMAGE TO EXISTING INFRASTRUCTURE, TREES, LANDSCAPE OR ANY OTHER MISC ITEMS THAT ARE TO REMAIN. CONTRACTOR SHALL RESTORE TO PRE-DEVELOPMENT CONDITION.

DEMOLITION & EROSION CONTROL PLAN

SCALE: 1" = 20'

SHANNON E. HUFTY LICENSE No 91838 STATE OF FLORIDA PROFESSIONAL ENGINEER

GEORGE & ASSOCIATES CONSULTING ENGINEERS, INC.
1967 COMMONWEALTH LANE, SUITE 200
TALLAHASSEE, FL 32303
CERTIFICATE OF AUTHORIZATION: 7879
SHANNON E. HUFTY, P.E. NO. 91838

THIS ITEM HAS BEEN DIGITALLY SIGNED AND SEALED BY SHANNON E. HUFTY, P.E. ON THE DATE ADJACENT TO THE SEAL.

PRINTED COPIES OF THIS DOCUMENT ARE NOT CONSIDERED SIGNED AND SEALED AND THE SIGNATURE MUST BE VERIFIED ON ANY ELECTRONIC COPIES.

SYMBOL	REVISION	DATE	SYMBOL	REVISION	DATE

Department of Environmental Protection
Division of Recreation and Parks
Bureau of Design and Construction
3900 Commonwealth Boulevard, Tallahassee, FL 32399 (850) 245-2118

ISSUE DATE: 10/06/2023
COMP. FILE No: 22-5482
STATE PROJECT No: 61354C

DESIGNER: SEH
DRAWN BY: KRM
REVIEWED BY: SEH
Consultant:

DODSTONE ARCHITECTS
3011-1 Powell Road | Tallahassee, FL 32308
850.656.7326 | #AA26001652

PROFESSIONAL REGISTRATION
SHANNON E. HUFTY
State of Florida P.E. # 91838

PONCE DE LEON SPRINGS STATE PARK

SHEET TITLE: DEMOLITION & EROSION CONTROL PLAN

PROJECT TITLE: RESTROOM IMPROVEMENTS

SHEET NO. C 201

KMANN October 4, 2023 P:\Projects\22-5482 DOA Ponce De Leon SP Restroom Improvements\Drawings\Civil\C 201 Demolition Plan.dwg

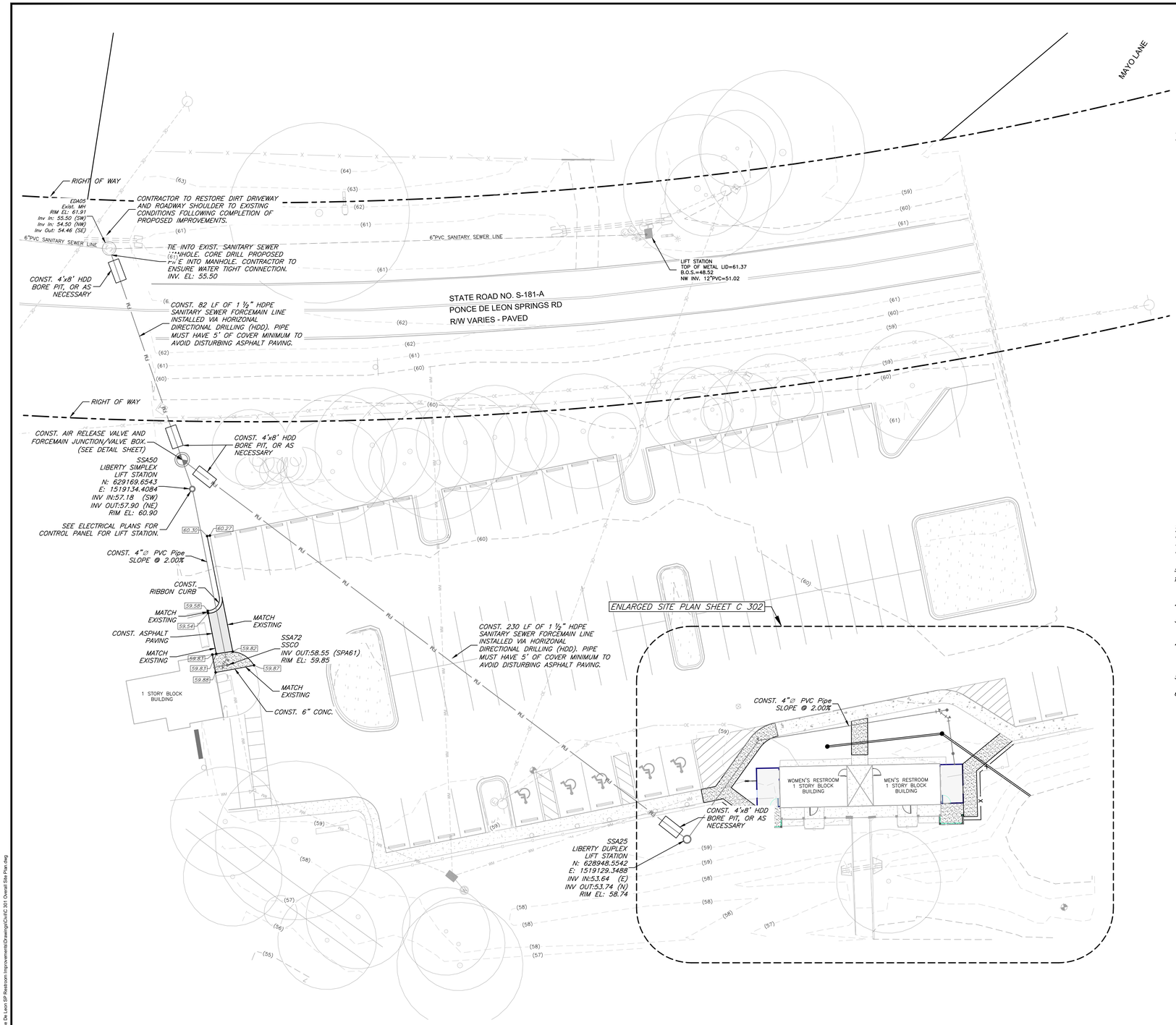

SPOT ELEVATION LEGEND

- 58.98 PROPOSED SPOT ELEVATION
- 58.37 EXISTING SPOT ELEVATION

LEGEND

- W — WATER LINE
- SS — SANITARY SEWER
- FM — FORCE MAIN
- X — FENCE
- PROPOSED BUILDING
- PROPOSED ASPHALT
- PROPOSED CONCRETE

TYPICAL SITE NOTES

1. THIS SITE MAY CONTAIN EXISTING UTILITY LINES, UTILITY STRUCTURES AND MISCELLANEOUS UTILITY EQUIPMENT THAT MAY NOT HAVE BEEN SURVEYED AND IN CONFLICT WITH PROPOSED CONSTRUCTION.
2. PROVIDE BACKFLOW PROTECTION PER RULES AND REGULATIONS FOR BACKFLOW PREVENTION AND CROSS-CONNECTION CONTROL, LATEST EDITION.
3. SUBMIT SHOP DRAWINGS SHOWING MANUFACTURERS' DRAWINGS AND SPECIFICATIONS INDICATING COMPLETE DETAIL OF ALL ITEMS. THE DETAIL SHALL INCLUDE MATERIAL SPECIFICATIONS, PRESSURE CLASS, CERTIFICATIONS, JOINT TYPES, GASKET INFORMATION, LININGS, COATINGS, INSTALLATION AND TESTING PROCEDURES AND OTHER PERTINENT INFORMATION NECESSARY TO ASSURE THAT PROPOSED MATERIALS COMPLY WITH ALL TECHNICAL SPECIFICATIONS. SHOP DRAWINGS ARE TO BE SUBMITTED TO ENGINEER FOR APPROVAL PRIOR TO FABRICATION AND SHIPMENT OF ITEMS.
4. CONTRACTOR RESPONSIBLE FOR ADJUSTING ALL UTILITIES TO FINISH GRADE, INCLUDING BUT NOT LIMITED TO VALVES, VAULTS, FIRE APPARATUSES, ETC. ABOVE GROUND WATER VALVES, BFP, WATER METERS SHALL BE COVERED WITH FIBERGLASS INSULATED COVER OR ALTERNATE COVER AS REQUESTED BY OWNER.
5. EXISTING UTILITY LINES ARE ACTIVE. CONTRACTOR SHALL TAKE ALL NECESSARY PRECAUTIONS TO ENSURE DISRUPTION OF SERVICES IS MINIMIZED AND ALL ACTIVE SERVICES ARE RESTORED TO WORKING CONDITIONS. IF UTILITY OUTAGES ARE ANTICIPATED, MUST NOTIFY OWNER 14 DAYS IN ADVANCE.
6. A MINIMUM OF 1.5' OF CLEAR DISTANCE IS REQUIRED FROM EDGE OF PAVEMENT TO LIGHT POLES.
7. CONTRACTOR RESPONSIBLE TO DEFLECT UTILITIES AS NEEDED TO CONSTRUCT PROPOSED IMPROVEMENTS.
8. CONTRACTOR TO COORDINATE WITH UTILITY PROVIDER(S) AND CIVIL ENGINEER FOR ANY AND ALL UTILITIES THAT MAY BE IN CONFLICT WITH PROPOSED CONSTRUCTION ACTIVITIES.
9. WHERE EXISTING ITEMS SUCH AS ASPHALT, CONCRETE CURB AND GUTTER, ETC. ARE SHOWN TO BE REMOVED. THESE ITEMS SHALL BE SAWCUT.
10. CONTRACTOR RESPONSIBLE TO ADJUST ALL UTILITIES AND VALVES TO FINISH GRADE.
11. CONTRACTOR RESPONSIBLE TO DEFLECT ANY UTILITIES NECESSARY TO CONSTRUCT PROPOSED IMPROVEMENTS.
12. CONTRACTOR TO SALVAGE AND STORE IN SECURE LOCATION ALL LIGHTING FIXTURES/POLES AND ASSOCIATED UTILITY EQUIPMENT INTENDED FOR REUSE.
13. CONTRACTOR TO PROVIDE SECURED FENCED CONSTRUCTION SITE. CONSTRUCTION FENCING LOCATION SHALL BE COORDINATED WITH PROJECT MANAGER.
14. SOD ALL DISTURBED AREAS WITH THE COORDINATION AND APPROVAL OF PARK BIOLOGIST.
15. WATER AND SEWER SERVICES SHALL MAINTAIN MINIMUM 6' HORIZONTAL CLEARANCE.
16. FILTER FENCE TO BE PLACED IN FRONT OF ALL GOPHER TORTOISE BURROWS TO PREVENT GOPHER TORTOISES FROM ENTERING CONSTRUCTION ZONE.
17. ALL SIGNAGE SHALL BE REMOVED, SALVAGED, AND STORED BEFORE CONSTRUCTION ACTIVITIES. ALL SIGNAGE SHALL BE REINSTALLED AFTER CONSTRUCTION ACTIVITIES. CONTRACTOR TO COORDINATE WITH PROPERTY OWNER FOR STORAGE LOCATION.

SINK HOLE REPAIR PLAN

IN THE EVENT A SINK HOLE SHOULD APPEAR OR DEVELOP WITHIN THE BOUNDARY LINES OF THE PROJECT AREA, THE OWNER SHALL CONSULT WITH A GEO-TECHNICAL ENGINEER OR PERSON(S) WITH EXPERIENCE IN THE AREA TO REPAIR THE SINK HOLE IN A TIMELY MANNER.

ADDITIONAL SITE NOTES

1. CONTRACTOR TO SOD ANY AND ALL DISTURBED AREAS INCLUDING BUT NOT LIMITED TO WHERE EXISTING CONCRETE, WALLS, UTILITIES OR ASPHALT WAS LOCATED UNLESS DESIGN DOCUMENTS SHOW OTHERWISE.
2. CONTRACTOR TO RESTORE ANY DISTURBED LANDSCAPE TO ORIGINAL CONDITIONS AND MITIGATE IF NECESSARY.
3. IF APPLICABLE, ALL PROPOSED NEW SIGNAGE TO BE PER BUREAU OF DESIGN AND CONSTRUCTION GUIDELINES AND COMPLY WITH FDOT SPECIFICATIONS.
4. EXPANSION JOINTS SHALL BE CONSTRUCTED AT ALL LOCATIONS WHERE THE NEW CONCRETE IS ADJACENT TO EXISTING AND/OR PROPOSED CONCRETE SLABS, SIDEWALKS, STRUCTURES. ALL SIDEWALK JOINTS TO CONFORM WITH THE LATEST EDITION OF FDOT INDEX AND FDOT SPECIFICATIONS.
5. CONTRACTOR TO FIELD VERIFY ALL QUANTITIES SHOWN AS NEW IMPROVEMENTS PRIOR TO BID.
6. CONTRACTOR TO CONFIRM DEPTH, MATERIAL, AND SIZE OF ALL UTILITIES BEFORE CONSTRUCTING IMPROVEMENTS AND NOTIFY ENGINEER.

0 10 20
1 inch = 20 ft.

OVERALL SITE-UTILITY PLAN

SCALE: 1" = 20'

SHANNON E. HUFTY LICENSE No 91838 STATE OF FLORIDA PROFESSIONAL ENGINEER

GEORGE & ASSOCIATES CONSULTING ENGINEERS, INC.
1967 COMMONWEALTH LANE, SUITE 200
TALLAHASSEE, FL 32303
CERTIFICATE OF AUTHORIZATION: 7879
SHANNON E. HUFTY, P.E. NO. 91838

THIS ITEM HAS BEEN DIGITALLY SIGNED AND SEALED BY SHANNON E. HUFTY, P.E. ON THE DATE ADJACENT TO THE SEAL.

PRINTED COPIES OF THIS DOCUMENT ARE NOT CONSIDERED SIGNED AND SEALED AND THE SIGNATURE MUST BE VERIFIED ON ANY ELECTRONIC COPIES.

SYMBOL	REVISION	DATE	SYMBOL	REVISION	DATE

Department of Environmental Protection
Division of Recreation and Parks
Bureau of Design and Construction
3900 Commonwealth Boulevard, Tallahassee, FL 32399 (850) 245-2118

ISSUE DATE: 10/06/2023
COMP. FILE No: 22-5482
STATE PROJECT No: 61354C

DODSTONE ARCHITECTS
3011-1 Powell Road | Tallahassee, FL 32308
850.656.7326 | #AA26001652

DESIGNER: SEH
DRAWN BY: KRM
REVIEWED BY: SEH
Consultant:

PROFESSIONAL REGISTRATION
SHANNON E. HUFTY
State of Florida P.E. # 91838

PROJECT TITLE: PONCE DE LEON SPRINGS STATE PARK
SHEET TITLE: OVERALL SITE-UTILITY PLAN
RESTROOM IMPROVEMENTS

SHEET NO. C 301

KMANN October 4, 2023 P:\Projects\22-5482 DCA Ponce De Leon SP Restroom Improvements\Drawings\Civil\C 301 Overall Site Plan.dwg

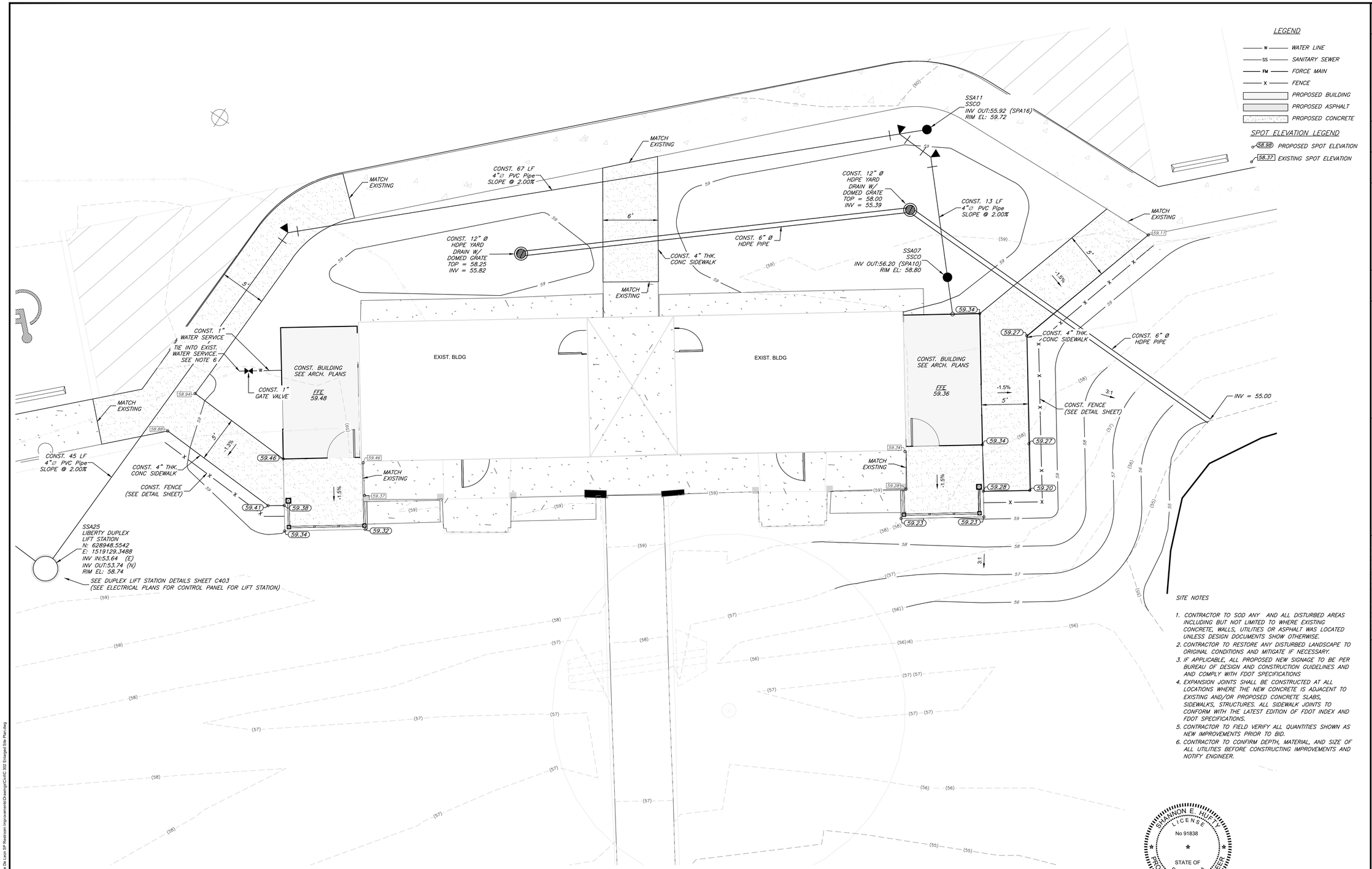

ENLARGED SITE-UTILITY PLAN

SCALE: 1" = 5'

5 0 2.5 5

1 inch = 5 ft.

SITE NOTES

1. CONTRACTOR TO SOD ANY AND ALL DISTURBED AREAS INCLUDING BUT NOT LIMITED TO WHERE EXISTING CONCRETE, WALLS, UTILITIES OR ASPHALT WAS LOCATED UNLESS DESIGN DOCUMENTS SHOW OTHERWISE.
2. CONTRACTOR TO RESTORE ANY DISTURBED LANDSCAPE TO ORIGINAL CONDITIONS AND MITIGATE IF NECESSARY.
3. IF APPLICABLE, ALL PROPOSED NEW SIGNAGE TO BE PER BUREAU OF DESIGN AND CONSTRUCTION GUIDELINES AND AND COMPLY WITH FDOT SPECIFICATIONS
4. EXPANSION JOINTS SHALL BE CONSTRUCTED AT ALL LOCATIONS WHERE THE NEW CONCRETE IS ADJACENT TO EXISTING AND/OR PROPOSED CONCRETE SLABS, SIDEWALKS, STRUCTURES. ALL SIDEWALK JOINTS TO CONFORM WITH THE LATEST EDITION OF FDOT INDEX AND FDOT SPECIFICATIONS.
5. CONTRACTOR TO FIELD VERIFY ALL QUANTITIES SHOWN AS NEW IMPROVEMENTS PRIOR TO BID.
6. CONTRACTOR TO CONFIRM DEPTH, MATERIAL, AND SIZE OF ALL UTILITIES BEFORE CONSTRUCTING IMPROVEMENTS AND NOTIFY ENGINEER.

SHANNON E. HUFTY
LICENSE
No 91838
STATE OF
FLORIDA
PROFESSIONAL ENGINEER

GEORGE & ASSOCIATES CONSULTING ENGINEERS, INC.
1967 COMMONWEALTH LANE, SUITE 200
TALLAHASSEE, FL 32303
CERTIFICATE OF AUTHORIZATION: 7879
SHANNON E. HUFTY, P.E. NO. 91838

THIS ITEM HAS BEEN DIGITALLY SIGNED AND SEALED BY SHANNON E. HUFTY, P.E. ON THE DATE ADJACENT TO THE SEAL.

PRINTED COPIES OF THIS DOCUMENT ARE NOT CONSIDERED SIGNED AND SEALED AND THE SIGNATURE MUST BE VERIFIED ON ANY ELECTRONIC COPIES.

SYMBOL	REVISION	DATE	SYMBOL	REVISION	DATE

Department of Environmental Protection
Division of Recreation and Parks
Bureau of Design and Construction
3900 Commonwealth Boulevard, Tallahassee, FL 32399 (850) 245-2118

ISSUE DATE: 10/06/2023
COMP. FILE No: 22-5482
STATE PROJECT No: 61354C

DESIGNER: SEH
DRAWN BY: KRM
REVIEWED BY: SEH
Consultant:

DODSTONE ARCHITECTS
3011-1 Powell Road | Tallahassee, FL 32308
850.656.7326 | #AA26001652

PROFESSIONAL REGISTRATION
SHANNON E. HUFTY
State of Florida P.E. # 91838

PONCE DE LEON SPRINGS STATE PARK

SHEET TITLE: ENLARGED SITE-UTILITY PLAN

PROJECT TITLE: RESTROOM IMPROVEMENTS

SHEET NO. C 302

KMANN October 4, 2023 P:\Projects\22-5482 DOA Ponce De Leon SP Restroom Improvements\Drawings\Civil\C 302 Enlarged Site Plan.dwg

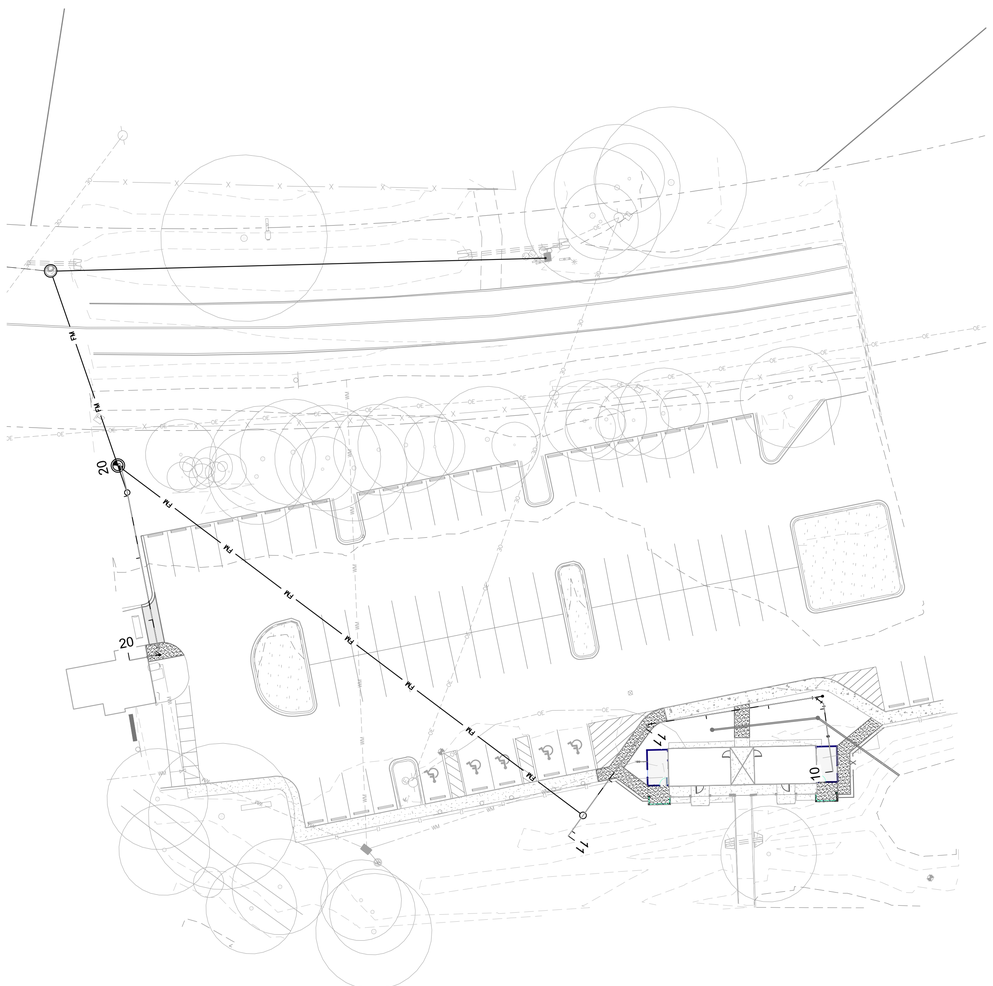

0 15 30

1 inch = 30 ft.

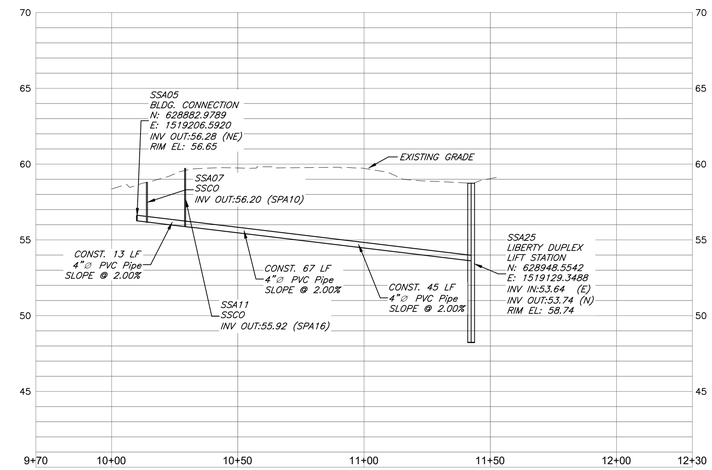

SAN SWR BATHHOUSE TO DUPLEX LIFT STATION

Horiz. Scale: 1"=30' Vert. Scale: 1"=5'

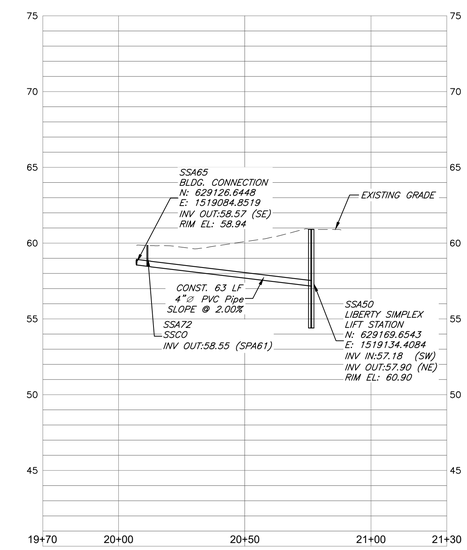

SAN SWR. PARK ENTRANCE BUILDING TO SWR MAIN

Horiz. Scale: 1"=30' Vert. Scale: 1"=5'

LEGEND

- W — WATER LINE
- SS — SANITARY SEWER
- FM — FORCE MAIN
- X — FENCE
- PROPOSED BUILDING
- PROPOSED ASPHALT
- PROPOSED CONCRETE

SPOT ELEVATION LEGEND

- 58.98 PROPOSED SPOT ELEVATION
- 58.37 EXISTING SPOT ELEVATION

SITE NOTES

1. CONTRACTOR TO SOD ANY AND ALL DISTURBED AREAS INCLUDING BUT NOT LIMITED TO WHERE EXISTING CONCRETE, WALLS, UTILITIES OR ASPHALT WAS LOCATED UNLESS DESIGN DOCUMENTS SHOW OTHERWISE.
2. CONTRACTOR TO RESTORE ANY DISTURBED LANDSCAPE TO ORIGINAL CONDITIONS AND MITIGATE IF NECESSARY.
3. IF APPLICABLE, ALL PROPOSED NEW SIGNAGE TO BE PER BUREAU OF DESIGN AND CONSTRUCTION GUIDELINES AND AND COMPLY WITH FDOT SPECIFICATIONS
4. EXPANSION JOINTS SHALL BE CONSTRUCTED AT ALL LOCATIONS WHERE THE NEW CONCRETE IS ADJACENT TO EXISTING AND/OR PROPOSED CONCRETE SLABS, SIDEWALKS, STRUCTURES. ALL SIDEWALK JOINTS TO CONFORM WITH THE LATEST EDITION OF FDOT INDEX AND FDOT SPECIFICATIONS.
5. CONTRACTOR TO FIELD VERIFY ALL QUANTITIES SHOWN AS NEW IMPROVEMENTS PRIOR TO BID.
6. CONTRACTOR TO CONFIRM DEPTH, MATERIAL, AND SIZE OF ALL UTILITIES BEFORE CONSTRUCTING IMPROVEMENTS AND NOTIFY ENGINEER.

GRAVITY SEWER PLAN AND PROFILE

SCALE: 1" = 30'

SHANNON E. HUFTY
LICENSE
No 91838
STATE OF
FLORIDA
PROFESSIONAL ENGINEER

GEORGE & ASSOCIATES CONSULTING ENGINEERS, INC.
1967 COMMONWEALTH LANE, SUITE 200
TALLAHASSEE, FL 32303
CERTIFICATE OF AUTHORIZATION: 7879
SHANNON E. HUFTY, P.E. NO. 91838

THIS ITEM HAS BEEN DIGITALLY SIGNED AND SEALED BY SHANNON E. HUFTY, P.E. ON THE DATE ADJACENT TO THE SEAL.

PRINTED COPIES OF THIS DOCUMENT ARE NOT CONSIDERED SIGNED AND SEALED AND THE SIGNATURE MUST BE VERIFIED ON ANY ELECTRONIC COPIES.

SYMBOL	REVISION	DATE	SYMBOL	REVISION	DATE

Department of Environmental Protection
Division of Recreation and Parks
Bureau of Design and Construction
3900 Commonwealth Boulevard, Tallahassee, FL 32399 (850) 245-2118

DESIGNER: SEH
DRAWN BY: KRM
REVIEWED BY: SEH
Consultant:

DODSTONE ARCHITECTS
3011-1 Powell Road | Tallahassee, FL 32308
850.656.7326 | #AA26001632

ISSUE DATE: 10/06/2023
COMP. FILE No: 22-5482
STATE PROJECT No: 61354C

PROFESSIONAL REGISTRATION
SHANNON E. HUFTY
State of Florida P.E. # 91838

PONCE DE LEON SPRINGS STATE PARK

SHEET TITLE: GRAVITY SEWER PLAN AND PROFILE

PROJECT TITLE: RESTROOM IMPROVEMENTS

SHEET NO. C 303

KMANN October 4, 2023 P:\Projects\22-5482 DOA Ponce De Leon SP Restroom Improvements\Drawings\Civil\C 303 Gravity Sewer Profiles.dwg

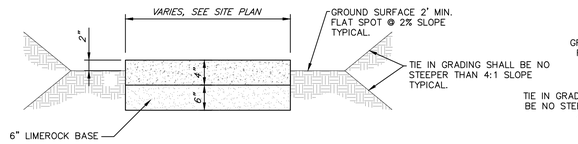

TYPICAL 4" CONCRETE SIDEWALK

SCALE: NTS

NOTE:
CONSTRUCT 4" THICK CONCRETE SIDEWALK IN ACCORDANCE WITH FDOT INDEX LATEST EDITION

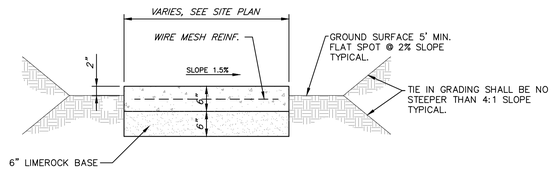

TYPICAL 6" CONCRETE SIDEWALK

SCALE: NTS

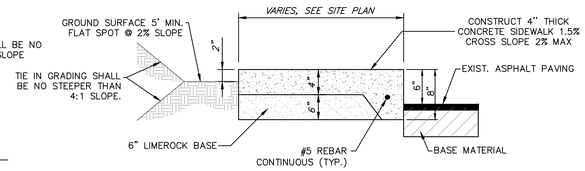

NOTE:
CONSTRUCT 4" THICK CONCRETE SIDEWALK IN ACCORDANCE WITH FDOT INDEX LATEST EDITION

RAISED 4" CONCRETE SIDEWALK

SCALE: NTS

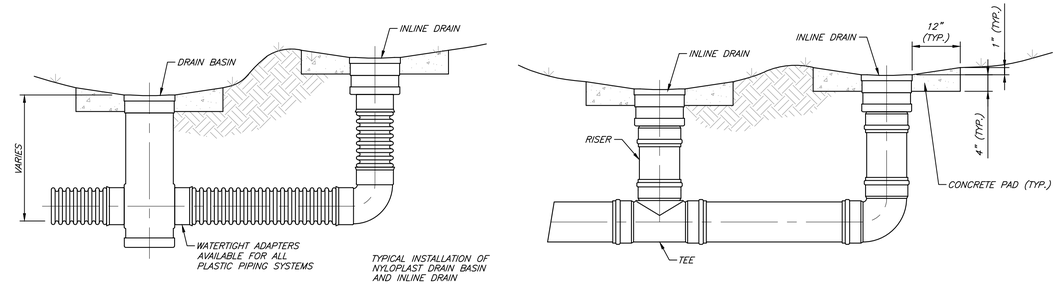

TYPICAL ADS INLET W/CONCRETE COLLAR

SCALE: NTS

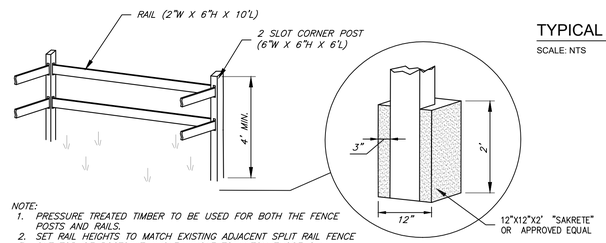

NOTE:
1. PRESSURE TREATED TIMBER TO BE USED FOR BOTH THE FENCE POSTS AND RAILS.
2. SET RAIL HEIGHTS TO MATCH EXISTING ADJACENT SPLIT RAIL FENCE
3. CUT TOP OF POSTS AT ANGLE. ANGLE TO MATCH THOSE ON EXISTING ADJACENT SPLIT RAIL FENCE
4. SPACE POSTS EVENLY ALONG EACH STRAIGHT RUN. CENTERLINE TO CENTERLINE DISTANCE NOT TO EXCEED 10 FEET

TYPICAL FENCE DETAIL

SCALE: NTS

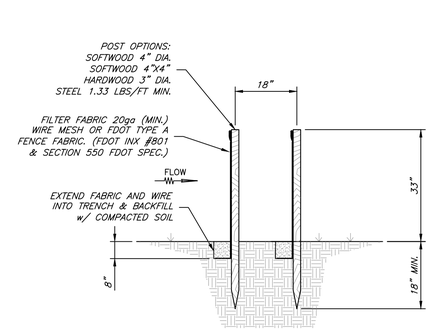

DOUBLE ROW FILTER FENCE DETAILS

N.T.S. EC-008

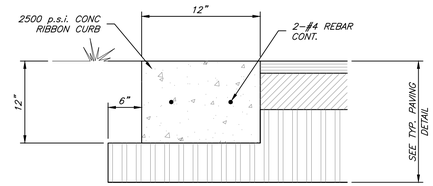

TYPICAL 12" RIBBON CURB

SCALE: NTS

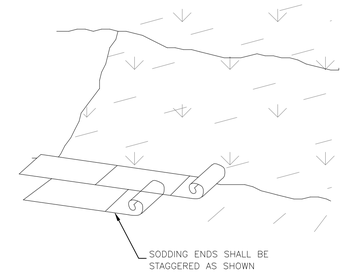

DISTURBED AREA SOD STABILIZATION

N.T.S. EC-019

NOTES:

1. CRITICAL ROOT ZONE: EXTENDS IN ALL DIRECTIONS FROM TREE TRUNK TO A DISTANCE EQUAL TO ONE FOOT PER INCH OF TRUNK DIAMETER AT BREAST HEIGHT.
2. STAGING, STORAGE, DUMPING, WASHING AND OPERATION OF EQUIPMENT IS NOT PERMITTED WITHIN THE LIMITS OF THE TREE PROTECTION BARRIER, INCLUDING DURING BARRIER INSTALLATION.
3. INSTALL ALL TREE PROTECTION PRIOR TO COMMENCEMENT OF CONSTRUCTION AND REMOVE WHEN DIRECTED BY THE ENGINEER. MAINTAIN PROTECTION AT ALL TIMES.
4. FOR CLOSELY SPACED GROUPS OF TREES, PLACE THE TREE PROTECTION BARRIER AROUND THE ENTIRE GROUP.
5. INSPECT TRUNK PROTECTION AND TREE QUARTERLY TO PREVENT GIRDLING. ADJUST BANDS TO ALLOW TREE GROWTH AS NEEDED.
6. SEE PLANS FOR ANY ADDITIONAL REQUIREMENTS OR MODIFICATIONS WITHIN THE TREE PROTECTION AREA.
7. PLACE WEATHER RESISTANT SIGN EVERY 50' ALONG THE BARRIER, WITH 6" MINIMUM TEXT HEIGHT AND PROVIDE TEXT IN ENGLISH AND SPANISH. SIGN SHOULD READ "KEEP OUT TREE PROTECTION AREA".
8. ALTERNATE TREE PROTECTION SYSTEMS APPROVED BY THE ENGINEER MAY BE USED IN LIEU OF THE TREE PROTECTION BARRIER DETAILED ON THIS PAGE AS LONG AS THE CRITICAL ROOT ZONE IS PROTECTED.
9. THE CRITICAL ROOT ZONE MAY BE REDUCED, IN THE FIELD, BY A CERTIFIED ARBORIST OR LANDSCAPE ARCHITECT.

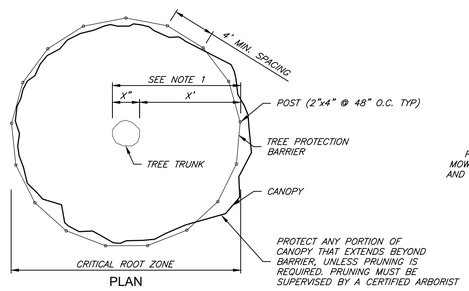

PLAN

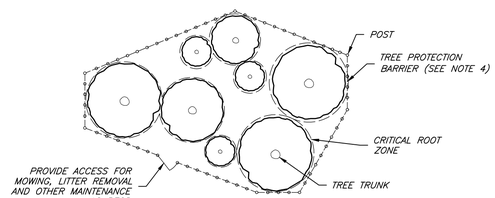

PLAN

PROTECTION FOR TREE GROUPINGS

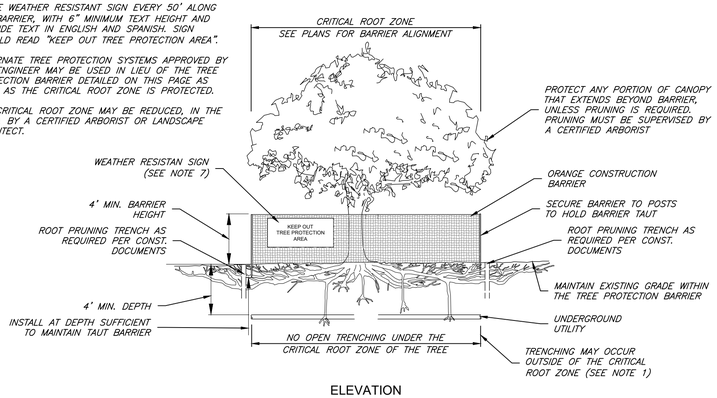

ELEVATION

TREE PROTECTION BARRIER

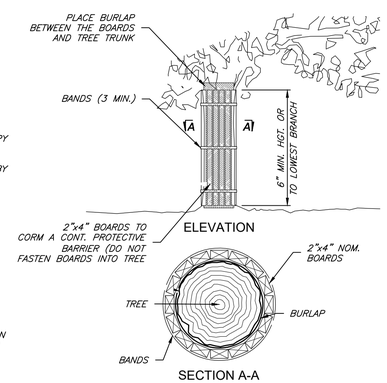

ELEVATION

SECTION A-A

NOTES:

1. TRUNK PROTECTION MAY BE USED WHEN TREE PROTECTION BARRIER CAN NOT BE REASONABLY ERECTED, WHEN APPROVED BY ENGINEER.
2. SEE SELECTIVE CLEARING AND GRUBBING PLAN FOR LOCATION OF TRUNK PROTECTION WHEN APPLICABLE.
3. ADJUST BANDS TO ALLOW TREE GROWTH (INSPECT QUARTERLY TO PREVENT GIRDLING).

TRUNK PROTECTION

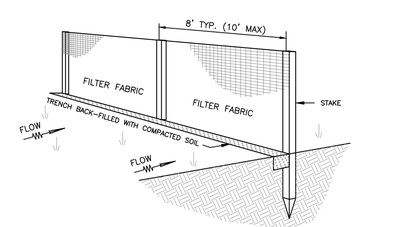

FILTER FENCE DETAILS

N.T.S. EC-006

FILTER FENCE MAINTENANCE

1. SYNTHETIC FILTER FENCE SHALL BE A PERVIOUS SHEET OF PROPYLENE, NYLON, POLYESTER, OR POLYETHYLENE YARN. SYNTHETIC FILTER FABRIC SHALL CONTAIN ULTRAVIOLET RAY INHIBITORS AND STABILIZERS TO PROVIDE A MINIMUM OF 6 MONTHS OF EXPECTED USABLE CONSTRUCTION LIFE AT A TEMPERATURE RANGE OF 0°F TO 120°F (-17C TO 49C)
2. FILTER FENCE SHALL BE INSPECTED IMMEDIATELY AFTER EACH RAINFALL AND AT LEAST DAILY DURING PROLONGED RAINFALL. ANY REQUIRED REPAIRS SHALL BE MADE IMMEDIATELY.
3. SHOULD THE FABRIC ON A FILTER FENCE DECOMPOSE OR BECOME INEFFECTIVE PRIOR TO THE END OF THE EXPECTED USABLE LIFE AND THE FILTER FENCE STILL BE NECESSARY, THE FABRIC SHALL BE REPLACED PROMPTLY.
4. SEDIMENT DEPOSITS SHOULD BE REMOVED AFTER EACH STORM EVENT. THEY MUST BE REMOVED WHEN DEPOSITS REACH APPROXIMATELY ONE-HALF THE HEIGHT OF THE FILTER FENCE.
5. ANY SEDIMENT DEPOSITS REMAINING IN PLACE AFTER THE FILTER FENCE IS NO LONGER REQUIRED SHALL BE DRESSED TO CONFORM WITH THE EXISTING GRADE, PREPARED AND SEEDED.

SHANNON E. HUFTY LICENSE No 91838 STATE OF FLORIDA PROFESSIONAL ENGINEER

GEORGE & ASSOCIATES CONSULTING ENGINEERS, INC.
1967 COMMONWEALTH LANE, SUITE 200
TALLAHASSEE, FL 32303
CERTIFICATE OF AUTHORIZATION: 7879
SHANNON E. HUFTY, P.E. NO. 91838

THIS ITEM HAS BEEN DIGITALLY SIGNED AND SEALED BY SHANNON E. HUFTY, P.E. ON THE DATE ADJACENT TO THE SEAL.

PRINTED COPIES OF THIS DOCUMENT ARE NOT CONSIDERED SIGNED AND SEALED AND THE SIGNATURE MUST BE VERIFIED ON ANY ELECTRONIC COPIES.

SYMBOL	REVISION	DATE	SYMBOL	REVISION	DATE

Department of Environmental Protection
Division of Recreation and Parks
Bureau of Design and Construction
3900 Commonwealth Boulevard, Tallahassee, FL 32399 (850) 245-2118

DESIGNER: SEH
DRAWN BY: KRM
REVIEWED BY: SEH
Consultant:

ISSUE DATE: 10/06/2023
COMP. FILE No: 22-5482
STATE PROJECT No: 61354C

DODSTONE ARCHITECTS
3011-1 Powell Road | Tallahassee, FL 32308
850.656.7326 | #AA26001652

PROFESSIONAL REGISTRATION
SHANNON E. HUFTY
State of Florida P.E. # 91838

PROJECT TITLE: PONCE DE LEON SPRINGS STATE PARK
RESTROOM IMPROVEMENTS

SHEET TITLE: DETAILS

SHEET NO. C 401

KMANN October 3, 2023 P:\Projects\22-5482 DDA Ponce De Leon SP Restroom Improvements\Drawings\Civil\C 501 DETAILS.dwg

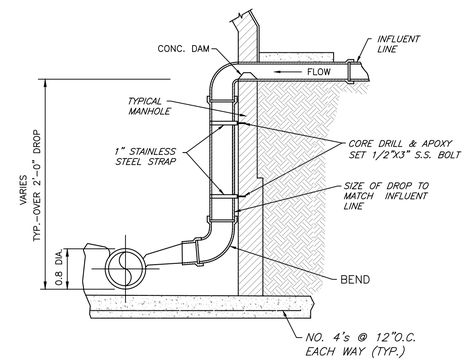

FORCEMAIN CONNECTION TO MANHOLE

SCALE: NTS

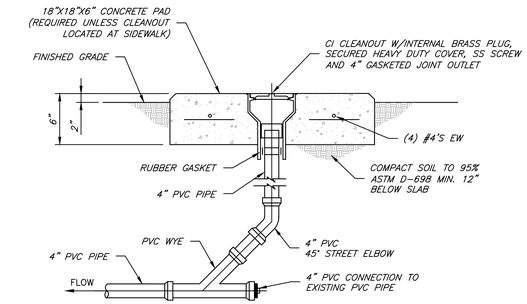

NOTE:
CLEANOUT REQUIRED AT EACH CHANGE OF DIRECTION GREATER THAN 45° AND AT MAX. SPACING OF 45 FT. EXCAVATION, PIPE INSTALLATION, BACKFILLING, AND COMPACTION SHALL BE IN ACCORDANCE WITH THE REQUIREMENTS OF THE CONTRACT PLANS AND SPECIFICATIONS.

TYPICAL CLEAN OUT

SCALE: NTS

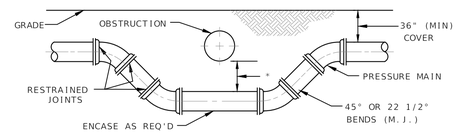

* 18" MINIMUM CLEARANCE REQUIRED FOR WATER, STORM WATER, AND SANITARY SEWER MAIN CROSSINGS. IF MINIMUM CLEARANCE CANNOT BE OBTAINED, DIP WITH MECHANICAL JOINTS OR CONCRETE ENCASEMENT IS REQUIRED (SEE NOTE 5)

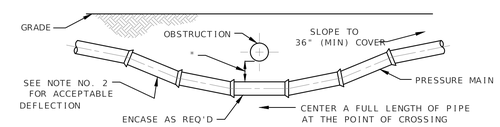

NOTES:

1. THE DEFLECTION TYPE CROSSING SHALL BE USED WHEREVER POSSIBLE. ONLY UNDER SPECIFIC ORDERS BY THE ENGINEER AND APPROVED BY IRCDUS SHALL THE FITTING TYPE CROSSING BE ALLOWED.
2. CONSTRUCT STANDARD CROSSING NOT TO EXCEED 75% OF THE MANUFACTURERS' MAXIMUM JOINT DEFLECTION.
3. IF USED, TIE RODS ARE TO BE COATED WITH A COAL TAR ENAMEL AFTER ASSEMBLY (2 COATS MINIMUM).
4. OTHER METHODS OF RESTRAINT MAY BE USED AS APPROVED BY IRCDUS.
5. USE DIP FOR GRAVITY SEWER WHERE VERTICAL CLEARANCE BETWEEN WATER MAIN AND SEWER IS LESS THAN 18 INCHES. DIP SHALL BE USED FOR GRAVITY SEWER AT WATER LINE CROSSING WITH A LENGTH OF PIPE. THE PIPE SHALL BE CENTERED AT THE POINT OF CROSSING, SO AS TO LOCATE JOINTS AT A POINT OF CROSSING, AND TO LOCATE THE JOINTS AT A MAXIMUM DISTANCE FROM THE WATER LINE.
6. ONLY UNDER EXTREME CIRCUMSTANCES MAY MINIMUM AND HORIZONTAL SEPARATION REQUIREMENTS BE WAIVED AND ENCASEMENT BE UTILIZED BETWEEN WATER MAINS AND FORCE MAINS.
7. SEE TRACER WIRE TRACE WIRE DETAIL (IRC M-14).
8. ALL WATER AND SEWER UTILITIES SHALL BE LOCATED A MINIMUM HORIZONTAL SEPARATION EQUAL TO THE DEPTH OF THE PIPE PLUS THE DIAMETER OF THE PIPE FROM ANY PERMANENT ABOVE GROUND STRUCTURES (I.E. WALLS, TREES, TRANSFORMER PADS, ETC.) AND A MINIMUM HORIZONTAL SEPARATION EQUAL TO FOUR (4) FEET FROM ANY UNDERGROUND UTILITIES (I.E. GAS MAINS, TELEPHONE LINES, CABLE LINES, IRRIGATION MAINS, ETC.).
9. ALL WATER AND SEWER UTILITIES SHALL BE LOCATED A MINIMUM HORIZONTAL SEPARATION EQUAL TO TWO TIMES THE DEPTH OF THE PIPE PLUS THE DIAMETER OF THE PIPE FROM THE TOP OF THE BANKS OF ANY BODIES OF WATER (I.E. STORMWATER PONDS, CANALS, ETC.).
10. ALL WATER AND SEWER UTILITIES SHALL BE LOCATED SUCH THAT A MINIMUM HORIZONTAL SEPARATION OF 10' EXISTS AS MEASURED FROM THE OUTSIDE WALL OF EACH MAIN.

UTILITY CROSSING DETAIL

SCALE: NTS

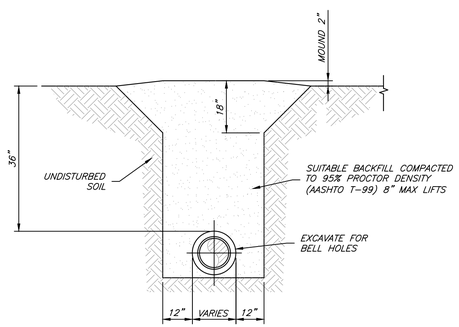

TYPICAL UNPAVED PIPE TRENCH DETAIL

SCALE: NTS

NOTES:

1. IF THE TRENCH IS OVEREXCAVATED, BACKFILL AND RECOMPACT. MUCK AND ORGANIC MATERIAL SHALL NOT BE ALLOWED AS BACKFILL IN OVEREXCAVATED AREAS.
2. HAND DIG AND MANUALLY SHAPE THE TRENCH BOTTOM FOR BELL JOINTS.
3. PIPES ARE TO BE INSTALLED IN DRY TRENCHES. OPEN TRENCH PLUMBING FOR DEWATERING SHALL NOT BE ALLOWED WITHOUT PRIOR APPROVAL OF THE ENGINEER.
4. BACKFILL SHALL BE PLACED IN LIFTS THIN ENOUGH TO ALLOW COMPACTION TO BE ACHIEVED. LIFTS IN EXCESS OF TWELVE INCHES, MEASURED LOOSE, SHALL NOT BE ALLOWED.
5. IF THE PIPE IS BENEATH OR WITHIN 5-FEET OF ANY BUILDING, COMPACT TO 100% STANDARD PROCTOR.
6. PIPE TRENCHES IN UNPAVED AREAS SHALL BE BACKFILLED WITH SELECT MATERIAL AND BEFORE PLACING SOD, A THREE-INCH MINIMUM THICK LAYER OF TOPSOIL THAT IS SUFFICIENTLY LOOSE TO PROMOTE ROOT GROWTH IS TO BE PROVIDED.
7. VERTICAL CLEARANCE: 12" MIN. BETWEEN POTABLE WATER MAIN AND ANY SANITARY SEWER PIPE (WATER MAIN ABOVE THE SANITARY SEWER PIPE).

NOTES:

1. TRENCH BACKFILL SHALL BE "SELECT BACKFILL" MATERIAL IN ACCORDANCE WITH THE CITY OF TALLAHASSEE TECHNICAL SPECIFICATIONS FOR WATER AND SEWER CONSTRUCTION.
2. THE TECHNICAL SPECIFICATIONS SHALL APPLY FOR ALL OTHER REQUIREMENTS NOT SUPERCEDED BY THIS DETAIL FOR ALL EXCAVATING, BACKFILLING, AND COMPACTING FOR UTILITIES.
3. TRENCHES WITH ASPHALT PATCHES THAT ARE CLOSER THAN 12" TO THE CURB AND GUTTER OR EDGE OF PAVEMENT SHALL HAVE CONTINUOUS 12" LIMEROCK BASE AND 2" MIN. ASPHALT PATCH TO THE CURB AND GUTTER OR EDGE OF PAVEMENT.
4. SUITABLE FILLS LIMITED TO AASHTO SOIL CLASSIFICATIONS A-2-5, A-2-6,A-2-7 A-4, A-5,A-6 & A-7, ALL WITH LIQUID LIMITS > 50 IN ACCORDANCE WITH F.D.O.T. INDEX.
5. NO ORGANIC MATERIALS AND PARTICLES EXCEEDING 4" IN DIAMETER WILL BE PERMITTED.

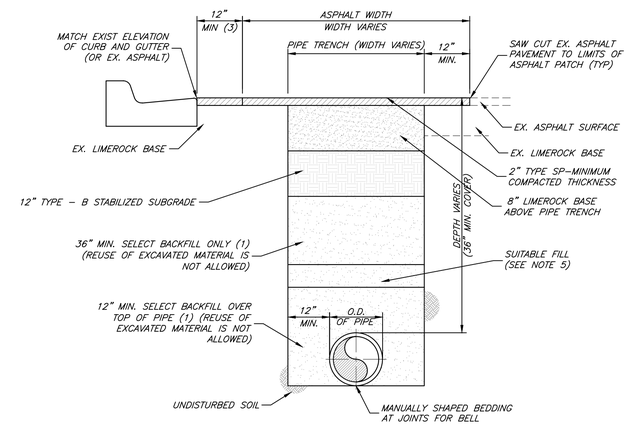

PIPE TRENCH AND PATCH DETAIL

SCALE: NTS

SHANNON E. HUFTY
LICENSE
No 91838
STATE OF FLORIDA
PROFESSIONAL ENGINEER

GEORGE & ASSOCIATES CONSULTING ENGINEERS, INC.
1967 COMMONWEALTH LANE, SUITE 200
TALLAHASSEE, FL 32303
CERTIFICATE OF AUTHORIZATION: 7879
SHANNON E. HUFTY, P.E. NO. 91838

THIS ITEM HAS BEEN DIGITALLY SIGNED AND SEALED BY SHANNON E. HUFTY, P.E. ON THE DATE ADJACENT TO THE SEAL.

PRINTED COPIES OF THIS DOCUMENT ARE NOT CONSIDERED SIGNED AND SEALED AND THE SIGNATURE MUST BE VERIFIED ON ANY ELECTRONIC COPIES.

SYMBOL	REVISION	DATE	SYMBOL	REVISION	DATE

Department of Environmental Protection
Division of Recreation and Parks
Bureau of Design and Construction
3900 Commonwealth Boulevard, Tallahassee, FL 32399 (850) 245-2118

ISSUE DATE: 10/06/2023
COMP. FILE No: 22-5482
STATE PROJECT No: 61354C

DODSTONE ARCHITECTS
3011-1 Powell Road | Tallahassee, FL 32308
850.656.7326 | #AA26001652

DESIGNER: SEH
DRAWN BY: KRM
REVIEWED BY: SEH
Consultant:

PROFESSIONAL REGISTRATION
SHANNON E. HUFTY
State of Florida P.E. # 91838

PONCE DE LEON SPRINGS STATE PARK

SHEET TITLE: DETAILS

PROJECT TITLE: RESTROOM IMPROVEMENTS

SHEET NO. C 402

KMANN October 3, 2023 P:\Projects\22-5482 DOLA Ponce De Leon SP Restroom Improvements\Drawings\Civil\C-501 DETAILS.dwg

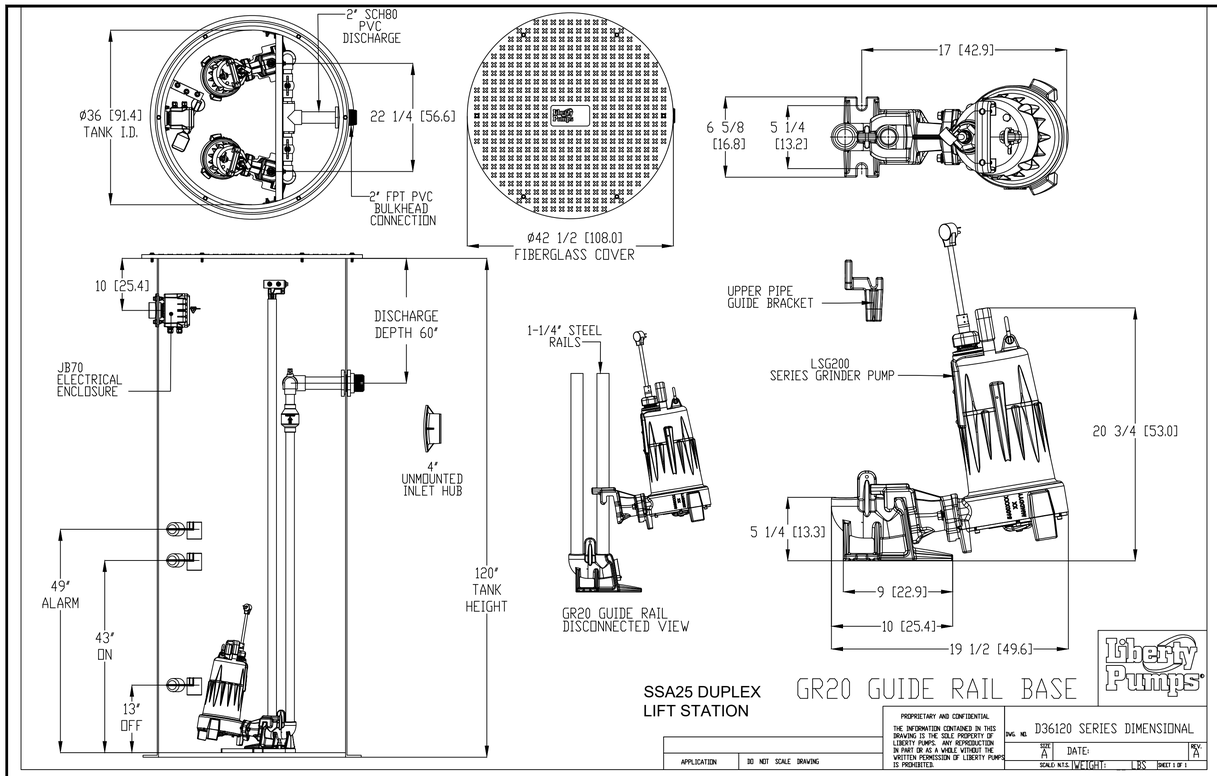

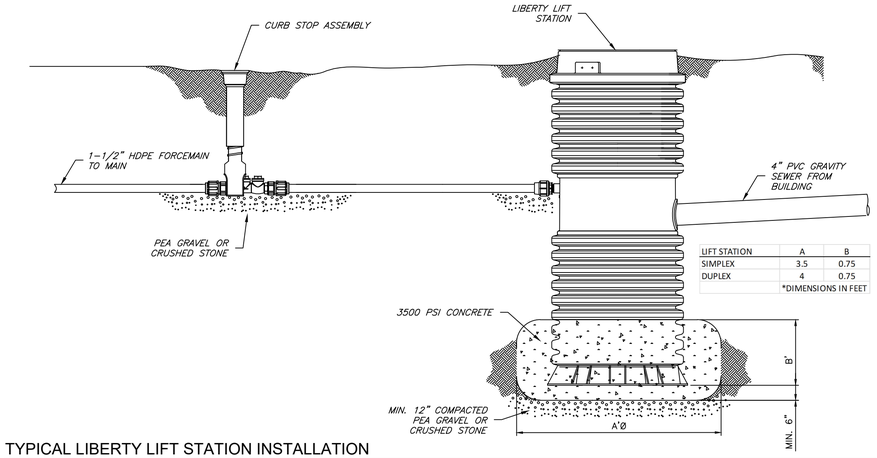

LIFT STATION	A	B
SIMPLEX	3.5	0.75
DUPLEX	4	0.75

*DIMENSIONS IN FEET

TYPICAL LIFTING STATION INSTALLATION

SCALE: NTS

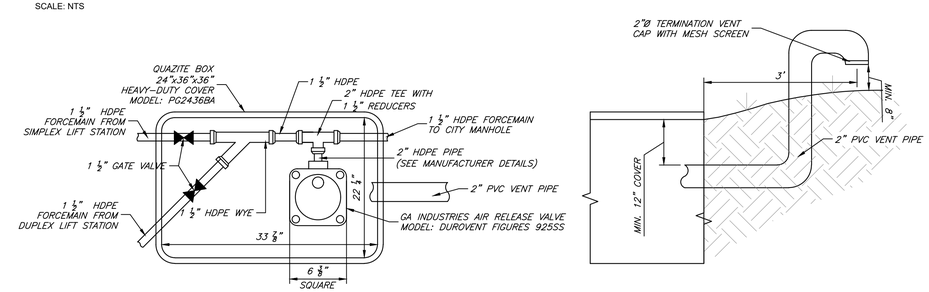

FORCEMAIN AIR RELEASE VALVE AND JUNCTION BOX

SCALE: NTS

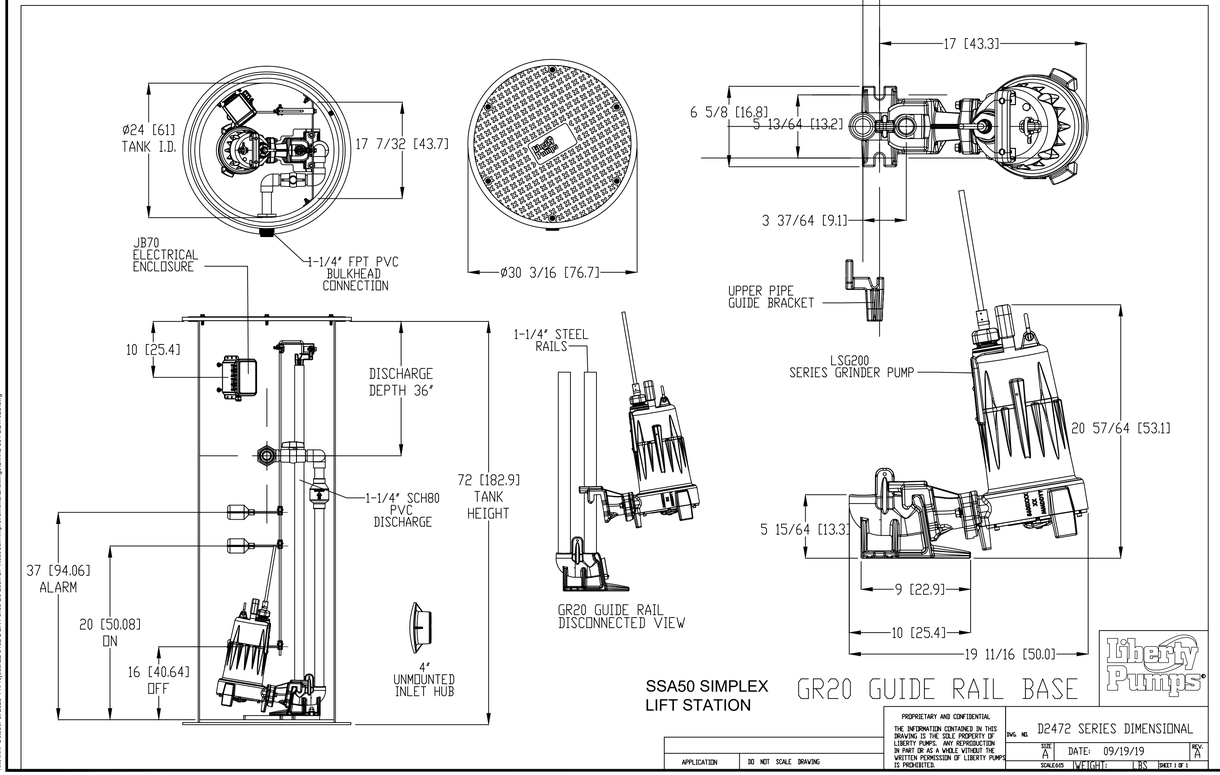

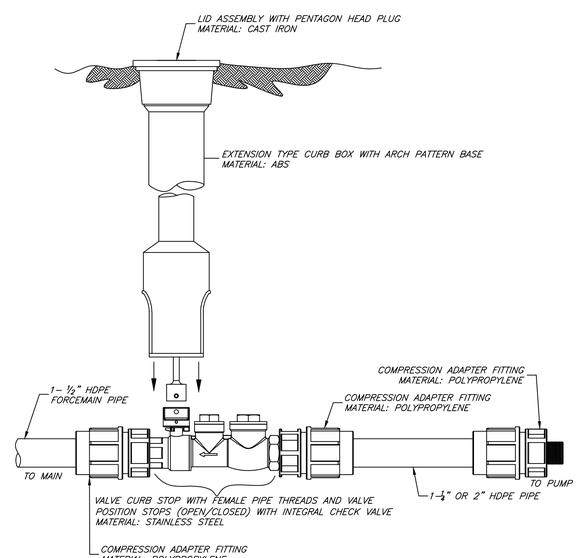

LIBERTY CSV200SS 2" FNPT CURB STOP

SCALE: NTS

NOTES:
1. TO BE INSTALLED BY FOLLOWING ALL MANUFACTURER INSTALLATION INSTRUCTIONS
2. ASSEMBLY IS TO BE PRESSURE TESTED

SHANNON E. HUFTY LICENSE No 91838 STATE OF FLORIDA PROFESSIONAL ENGINEER

GEORGE & ASSOCIATES CONSULTING ENGINEERS, INC.
1967 COMMONWEALTH LANE, SUITE 200
TALLAHASSEE, FL 32303
CERTIFICATE OF AUTHORIZATION: 7879
SHANNON E. HUFTY, P.E. NO. 91838

THIS ITEM HAS BEEN DIGITALLY SIGNED AND SEALED BY SHANNON E. HUFTY, P.E. ON THE DATE ADJACENT TO THE SEAL.

PRINTED COPIES OF THIS DOCUMENT ARE NOT CONSIDERED SIGNED AND SEALED AND THE SIGNATURE MUST BE VERIFIED ON ANY ELECTRONIC COPIES.

SYMBOL	REVISION	DATE

SYMBOL	REVISION	DATE

Department of Environmental Protection
Division of Recreation and Parks
Bureau of Design and Construction
3900 Commonwealth Boulevard, Tallahassee, FL 32399 (850) 245-2118

ISSUE DATE: 10/06/2023
COMP. FILE No: 22-5482
STATE PROJECT No: 61354C

DESIGNER: SEH
DRAWN BY: KRM
REVIEWED BY: SEH
Consultant:

DODSTONE ARCHITECTS
3071-1 Powell Road | Tallahassee, FL 32308
850.656.7326 | #AA26001652

PROFESSIONAL REGISTRATION
SHANNON E. HUFTY
State of Florida P.E. # 91838

PONCE DE LEON SPRINGS STATE PARK

SHEET TITLE: LIFT STATION DETAILS

PROJECT TITLE: RESTROOM IMPROVEMENTS

SHEET NO. C 403

AMANN October 3, 2023 P:\Projects\22-5482 DOA Ponce De Leon SP Restroom Improvements\Drawings\Civil\C-501 DETAILS.dwg