THE BARNACLE STATE PARK

DISTRICT 5

DADE COUNTY

PAVILION REPLACEMENT

PROJECT # 61271C

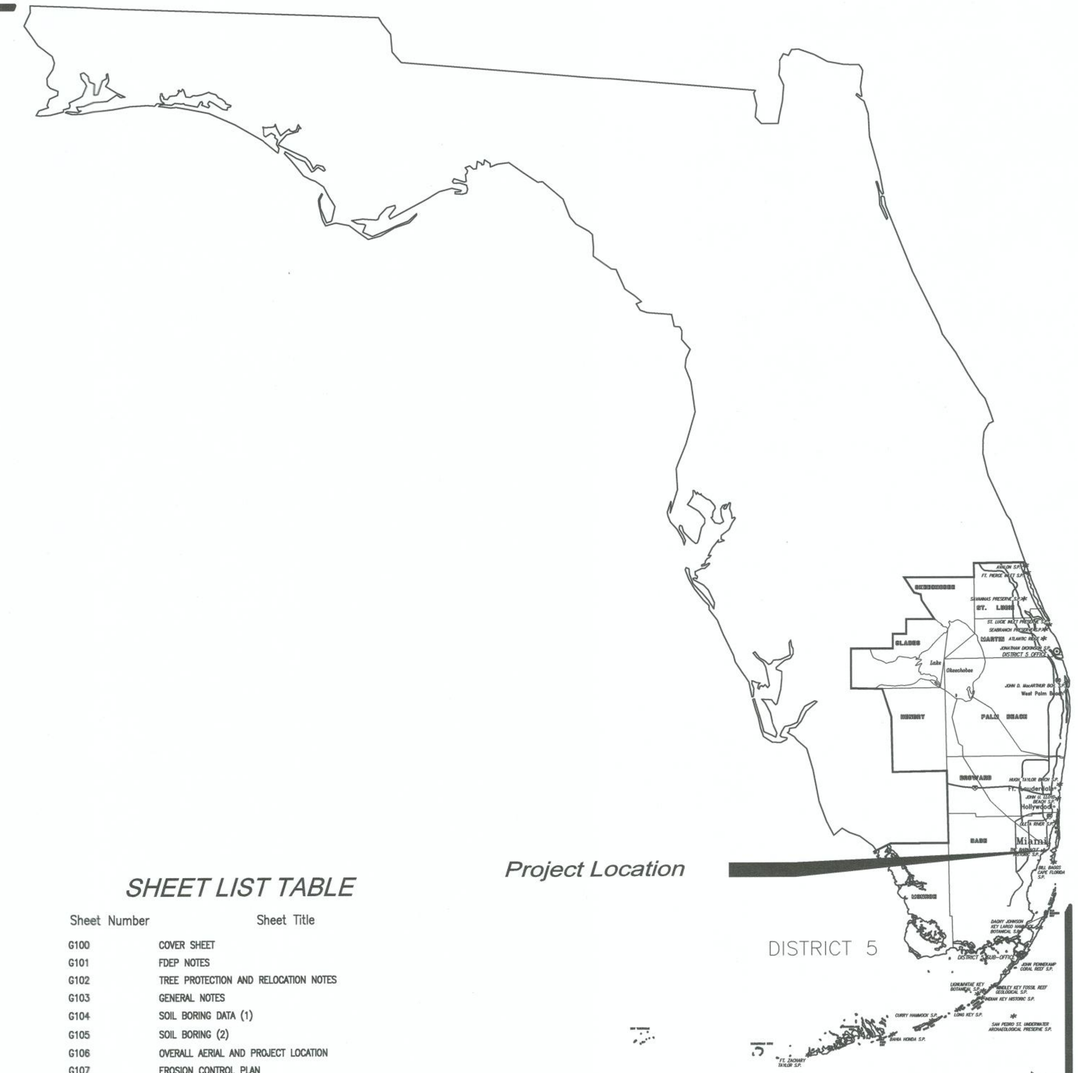

ABBREVIATIONS

A.F.F.	ABOVE FINISHED FLOOR
A.H.U.	AIR HANDLING UNIT
ALUM.	ALUMINUM
ALT.	ALTERNATE
APPROX.	APPROXIMATE
BD.	BOARD
BLDG.	BUILDING
BLK.	BLOCK
BLKG.	BLOCKING
BLT.	BUILT
BRK.	BRICK
BRKR.	BREAKER
BSMT.	BASEMENT
C.J.	CONTROL JOINT
CLG.	CEILING
CLR.	CLEAR
CMU	CONCRETE MASONRY UNIT
C.O.	CLEAN OUT
CONC.	CONCRETE
CU	COPPER
CU. FT.	CUBIC FOOT
CU. IN.	CUBIC INCH
CU. YD.	CUBIC YARD
DIA./Ø.	DIAMETER
DBL.	DOUBLE
DBT.	DRY-BULB TEMPERATURE
DEG.	DEGREE
DEPT.	DEPARTMENT
DF	DRINKING FOUNTAIN
DISC.	DISCONNECT
DL	DEAD LOAD
DN.	DOWN
D.S.	DOWN SPOUT
DWG	DRAWING
E.F.	EXHAUST FAN
EXH	EXHAUST
EXP. JT.	EXPANSION JOINT
EXT.	EXTERIOR
FIN	FINISH
FL	FLOOR
FLUOR.	FLUORESCENT
FP	FIREPLACE
FR	FIRE RATING
FT.	FOOT/FEET
FTG.	FOOTING
GALV.	GALVANIZED
GFI	GROUND FAULT CIRCUIT INTERRUPT
GOV'T.	GOVERNMENT
GR.FL.	GROUND FLOOR
GYP.	GYPSUM
H.C.	HOLLOW CORE
H.D.G.	HOT DIPPED GALVANIZED
HDR	HEADER
HDWR.	HARDWARE
H.P.	HORSEPOWER
HT.	HEIGHT
HTR	HEATER
HV	HIGH VOLTAGE
HVAC.	HEATING, VENTILATING AND AIR CONDITIONING
HWY.	HIGHWAY
ID	INSIDE DIAMETER
IN	INCH
INCAND.	INCANDESCENT
INCL.	INCLUDED
INSUL.	INSULATION
INT.	INTERIOR
INV. EL.	INVERT ELEVATION
JST.	JOIST
KD	KILN DRIED
KW	KILOWATT
KWH	KILOWATT HOUR
LAM.	LAMINATED
LAV.	LAVATORY
LB.	POUND
LTG.	LIGHTING
LGTH.	LENGTH
LIN.	LINEAR
LL	LIVE LOAD
MANUF.	MANUFACTURE
MAX.	MAXIMUM
MF.	MILL FINISH
MIN.	MINIMUM
MLDG.	MOLDING
MHW	MEAN HIGH WATER
MHHW	MEAN HIGHER HIGH WATER
MLW	MEAN LOW WATER
MLLW	MEAN LOWER LOW WATER
MSL	MEAN SEA LEVEL
MOD.	MODIFICATION
NTS.	NOT TO SCALE
NO./#	NUMBER
OA	OVERALL
O.C.	ON CENTER
O.D.	OUTSIDE DIAMETER
OFC.	OFFICE
O/H	OVER HEAD
OPP.	OPPOSITE
PARTN.	PARTITION
PC	PORTLAND CEMENT
PCF	POUNDS PER CUBIC FOOT
P.E.	PROFESSIONAL ENGINEER
PERF.	PERFORATE
PERP.	PERPENDICULAR
PL.	PLATE
PLG.	PILING
PLYWD.	PLYWOOD
PNL.	PANEL
PREFAB.	PREFABRICATED
PRELIM.	PRELIMINARY
PSF	POUNDS PER SQUARE FOOT
PSI	POUNDS PER SQUARE INCH
P.T.	PRESSURE TREATED
QS	QUARTER SAWN
R	RADIUS
RCPT.	RECEPTACLE
REBAR	REINFORCING BAR
REFRIG.	REFRIGERATION
REINF.	REINFORCING
RFG	ROOFING
RGH	ROUGH
RM	ROOM
R.O.	ROUGH OPENING
RS	ROUGH SAWN
S.C.	SOLID CORE
SCH	SCHEDULE
SDG	SIDING
SECT.	SECTION
SFTWD.	SOFTWOOD
SGD.	SLIDING GLASS DOOR
SH	SHINGLES
SPEC	SPECIFICATION
SPR.	SPRUCE
SQ.	SQUARE
SQ. FT.	SQUARE FOOT
SQ. IN.	SQUARE INCH
SQ. YD.	SQUARE YARD
SS	STAINLESS STEEL
STL.	STEEL
SUB. FL.	SUBFLOOR
SUP.	SUPPLY
SW.	SWITCH
SYM.	SYMMETRICAL
S.Y.P.	SOUTHERN YELLOW PINE
SYS.	SYSTEM
S4S	SURFACED FOUR SIDES
TEL.	TELEPHONE
T&G	TONGUE-AND-GROOVE
TYP.	TYPICAL
U.E.	UNDERGROUND ELECTRIC
U.G.	UNDER GROUND
UL	UNDERWRITERS LABORATORIES, INC.
V.	VOLT
VENT.	VENTILATOR
VERT.	VERTICAL
VIF	VERIFY IN FIELD
VOL.	VOLUME
VP	VENT PIPE
VTR	VENT THRU ROOF
W	WATER
WBT.	WET BULB TEMPERATURE
WC	WATER CLOSET
WD	WOOD
WP	WATERPROOF
WWF.	WELDED WIRE FABRIC
YD.	YARD

REFERENCE LEGEND

G8 / A502 — SECTION IDENTIFICATION / SHEET NUMBER

G8 / A502 — DETAIL IDENTIFICATION / SHEET NUMBER

APPLICABLE CODES AND DESIGN DATA

CODE LIST

FLORIDA BUILDING CODE, BUILDING (FBC-B)..... 2020 EDITION
FDOT STANDARD SPECIFICATIONS FOR ROAD & BRIDGE CONST. ..... LATEST EDITION
FDOT DESIGN STANDARDS..... LATEST EDITION
FLORIDA ACCESSIBILITY CODE.....2020 EDITION

DESIGN DATA

CONSTRUCTION TYPE:	N/A	TOTAL BUILDING AREA PER FLOOR:	N/A
OCCUPANCY CLASS:	N/A	BUILDING HEIGHT/NUMBER OF STORIES:	N/A
OCCUPANT LOAD:	N/A	REQUIRED SPRINKLER OR ALARM SYSTEM:	YES / NO
TOTAL EXITS:	N/A	NUMBER OF BEDROOMS:	N/A
SQ FT ALTERED AREA	N/A	LEVEL OF ALTERATION:	N/A

DESIGN LOADS (FBC-B CHAPTER 16):
SEE SHEET G102

WIND LOADS (FBC-B SECTION 1609):
SEE SHEET G102

SCOPE OF PROJECT

THE CONTRACTOR SHALL PROVIDE ALL LABOR, MATERIALS, EQUIPMENT, SUPERVISION AND PERMITTING TO REMOVE EXISTING PAVILION ROOF AND TRUSSES, WOOD SUPPORT COLUMNS, CHECKERBOARD FLOOR, PAVILION CONCRETE FOOTERS, AND SIDEWALK. REGRADE SITE, PLACE NEW HELICAL PILES, FOOTERS, AND A NEW WOOD PAVILION WITH CMU COLUMNS.

JEFFREY R. BERGMANN, P.E.
DESIGNER

CN229
FILE No.

OCTOBER 2021
INITIAL ISSUE DATE

SHEET LIST TABLE

Sheet Number	Sheet Title
G100	COVER SHEET
G101	FDEP NOTES
G102	TREE PROTECTION AND RELOCATION NOTES
G103	GENERAL NOTES
G104	SOIL BORING DATA (1)
G105	SOIL BORING (2)
G106	OVERALL AERIAL AND PROJECT LOCATION
G107	EROSION CONTROL PLAN
G108	EROSION CONTROL DETAILS
SD100	DEMOLITION PLAN
SD101	DEMOLITION PHOTOS
AA101	FIRST FLOOR PLAN
AA201	PERSPECTIVE
S100	STRUCTURAL SITE PLAN
S101	ENLARGED GRADING PLAN
S200	FOUNDATION PLAN
S300	ROOF FRAMING PLAN
S400	PAVILION ELEVATIONS
S500	FOUNDATION DETAILS
S600	DETAILS (1)
S601	DETAILS (2)
S602	DETAILS (3)
S700	BOAT HOIST DETAILS
E001	ELECRTICAL SYMBOLS
E100	ELECRTICAL PLAN
E200	ELECTRICAL SCHEDULES & DETAILS
E300	PHOTOMETRICS
E800	LIGHTING COMCHECK

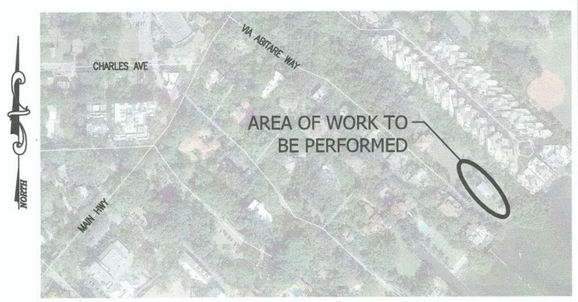

LOCATION MAP
NTS

THE BARNACLE STATE PARK
PAVILION REPLACEMENT

WGI
2035 Vista Parkway
West Palm Beach, FL 33411
Phone No. 561.687.2220
Fax No. 561.687.1110
Registry No. 33574

WGI PROJECT NO. 2412.12

PERMIT SET

Division of Recreation and Parks Bureau of Design and Construction

Florida Department of Environmental Protection

Craig Burkhardt p:\structures\2020-jobs\2412.12 fdep barnacle house pavilion\07 structural dwgs\cadd 2412.12\G100_MM-DD-YY_61271C_F.dwg ---- Plotted: 3/31/2022 5:05:05 PM Saved: 10/27/2021 2:10:29 PM

GENERAL NOTES:

1. CONTRACTOR IS RESPONSIBLE FOR AND SHALL VERIFY AND COORDINATE ALL DIMENSIONS AND DETAILS BEFORE PROCEEDING WITH WORK. ANY DISCREPANCIES SHALL BE BROUGHT TO THE ATTENTION OF THE ENGINEER BEFORE COMMENCING WORK.
2. WORKING HOURS ARE: MONDAY-SUNDAY DURING DAYLIGHT HOURS.
3. THE CONTRACTOR IS RESPONSIBLE FOR INSPECTING AND ACCEPTING THE EXISTING CONDITIONS OF THE SITE PRIOR TO BIDDING.
4. ALL DISTURBED AREAS WITHIN THE LIMITS OF CONSTRUCTION SHALL BE RE-VEGETATED AS SPECIFIED BY THE PARK SERVICE BIOLOGIST.
5. EXISTING UNDERGROUND UTILITIES SHOWN ARE BASED ON THE BEST AVAILABLE INFORMATION. THE CONTRACTOR SHALL ENSURE THAT THE UTILITY SYSTEMS DO NOT CONFLICT WITH THE PROPOSED PROJECT. CONFLICTS SHALL BE REPORTED TO THE PROJECT MANAGER IMMEDIATELY.
6. THE CONTRACTOR IS RESPONSIBLE FOR THE PROTECTION OF ALL UTILITIES. REMOVAL AND/OR RELOCATION OF EXISTING UTILITIES IN CONFLICT WITH THE WORK, CONSTRUCTION OF TEMPORARY UTILITIES IN THE EVENT THAT EXISTING UTILITY SERVICE MUST BE INTERRUPTED AND ANY OTHER CONSTRUCTION RELATED ACTIVITIES THAT MAY AFFECT EXISTING OR PROPOSED UTILITIES. THE INFORMATION SHOWN ON THESE DRAWINGS CONCERNING TYPE AND LOCATION OF UNDERGROUND AND OTHER UTILITIES IS BASED ON INFORMATION PROVIDED BY THE UTILITY OWNERS, AVAILABLE RECORDS, AND SURVEYED FIELD INFORMATION. THE INFORMATION MAY NOT REFLECT ACTUAL CONDITIONS, INCLUDE ALL UTILITIES IN THE AREA, EITHER IN SERVICE OR ABANDONED, OR SHOW THE UTILITIES IN THE CORRECT HORIZONTAL OR VERTICAL LOCATIONS. THE CONTRACTOR WILL MAKE HIS OWN DETERMINATION AS TO THE TYPE AND LOCATION OF UTILITIES AS NECESSARY TO ESTABLISH THEIR LOCATIONS AND AVOID DAMAGE.
7. THE CONTRACTOR SHALL BE RESPONSIBLE FOR ESTABLISHING ALL GRADE STAKES, LINES AND LEVELS.
8. THE CONTRACTOR SHALL SOLID SOD ALL DISTURBED AREAS UNLESS OTHERWISE SPECIFIED OR SHOWN.
9. NO SEPARATE PAYMENT WILL BE MADE FOR DEWATERING. THE COSTS FOR DEWATERING ARE INCLUDED IN THE UNIT PRICES FOR CONSTRUCTING THIS PROJECT.
10. ALL AREAS, STREETS, DRIVEWAYS, PARKING LOTS, ETC. DISTURBED BY CONSTRUCTION SHALL BE RESTORED BY THE CONTRACTOR TO THEIR ORIGINAL OR BETTER CONDITION.
11. THE CONTRACTOR WILL HAVE ALL REQUIRED PERMITS IN-HAND PRIOR TO BEGINNING CONSTRUCTION, AND WILL PERFORM ALL WORK IN ACCORDANCE WITH THE REQUIREMENTS OF THE PERMITS OBTAINED BY THE OWNER AND THOSE PERMITS OBTAINED BY THE CONTRACTOR.
12. PRIOR TO COMMENCING CONSTRUCTION, THE CONTRACTOR WILL SUBMIT TO THE OWNER'S PROJECT MANAGER A SCHEDULE OF VALUES, A CONSTRUCTION SCHEDULE, A SAFETY PLAN AND E-VERIFICATION.
13. THE CONSTRUCTION SCHEDULE WILL DESCRIBE IN DETAIL HOW THE CONSTRUCTION IS TO BE PHASED, ESTABLISH START AND FINISH DATES FOR ALL SIGNIFICANT CONSTRUCTION ACTIVITIES, AND IDENTIFY ALL CONTROLLING ITEMS OF WORK. THE SCHEDULE IS TO BE APPROVED BY THE OWNER'S PROJECT MANAGER, AND WILL BE UPDATED ON A MONTHLY BASIS TO REFLECT ACTUAL WORK PROGRESS. PAYMENT FOR PREPARING, UPDATING AND SUBMITTING THE SCHEDULE WILL BE INCLUDED IN THE PAY ITEM FOR MOBILIZATION OR OTHER PAY ITEMS AS APPROPRIATE.
14. THE CONTRACTOR SHALL SUBMIT AN EROSION CONTROL PLAN FOR APPROVAL BY THE OWNER'S PROJECT MANAGER AND WILL ADDRESS THE INSTALLATION AND MAINTENANCE OF ALL TEMPORARY AND PERMANENT SEDIMENT AND EROSION CONTROL DEVICES TO BE USED DURING EACH PHASE OF CONSTRUCTION, INCLUDING TREE REMOVAL, CLEARING AND GRUBBING, EXCAVATION, HAULING OF EXCAVATED MATERIALS, AND PLACEMENT OF EMBANKMENT AND BACKFILL. THE PLAN ALSO WILL DETAIL THE EROSION CONTROL MEASURES TO BE EMPLOYED AT ALL STOCKPILE AND CONSTRUCTION STAGING AREAS AND WILL DEFINE THE MAXIMUM LIMITS OF ALL ACTIVE CONSTRUCTION ZONES.
15. ANY NATIONAL GEODETIC SURVEY MONUMENT WITHIN THE LIMITS OF CONSTRUCTION MUST BE PROTECTED. IF IN DANGER OF DAMAGE, THE CONTRACTOR WILL IMMEDIATELY NOTIFY THE PROJECT MANAGER AND:

    FDEP, BUREAU OF SURVEY AND MAPPING, MS 105
    3900 COMMONWEALTH BLVD.
    TALLAHASSEE, FLORIDA 32399
    (850) 245-2606 (OFFICE)
    (850) 245-2645 (FAX)

16. PRIOR TO ANY SCHEDULED INTERRUPTION OF UTILITY SERVICE, THE CONTRACTOR WILL COORDINATE SUCH INTERRUPTION WITH THE UTILITY PROVIDER AND WILL PROVIDE A MINIMUM 24-HOUR NOTICE TO THE AFFECTED PARTIES. THE CONTRACTOR WILL NOTIFY THE ELECTRIC UTILITY A MINIMUM OF TWO WEEKS PRIOR TO CONSTRUCTION IN THE VICINITY OF THEIR FACILITIES.
17. NO TRENCHES WILL BE ALLOWED TO REMAIN OPEN OVERNIGHT.
18. THE CONTRACTOR IS RESPONSIBLE FOR THE PROTECTION OF VEGETATION ON AND ADJACENT TO THE PROJECT SITE, AND WILL BE SOLELY LIABLE FOR DAMAGE TO VEGETATION ON PROPERTIES ADJACENT TO CONSTRUCTION WORK ZONES. ALL TREES WITHIN THE LIMITS OF CONSTRUCTION ARE TO BE PROTECTED EXCEPT THOSE TREES IDENTIFIED ON THE PLANS TO BE REMOVED. ALL TREES OUTSIDE THE CONSTRUCTION WORK ZONE ARE TO BE PROTECTED TO THE MAXIMUM EXTENT PRACTICABLE. TREE BARRICADES WILL BE INSTALLED AND MAINTAINED AROUND ALL TREES TO BE PROTECTED AS SHOWN ON THE DRAWINGS OR AS DIRECTED BY THE PROJECT MANAGER.
19. THE CONTRACTOR IS RESPONSIBLE TO PLACE AND MAINTAIN ROADSIDE WARNING SIGNS WHEN WORK IS BEING CONDUCTED IN THE PROPERTY RIGHT OF WAY OR WHEN MACHINERY IS ENTERING AND LEAVING THE PROJECT SITE.
20. THE CONTRACTOR IS RESPONSIBLE FOR DISPOSAL OF EXCAVATED MATERIAL OFF-SITE UNLESS OTHERWISE DIRECTED BY THE PROJECT MANAGER.

ENVIRONMENTAL NOTES:

1. THE CONTRACTOR SHALL SUBMIT AN EROSION CONTROL PLAN IN ACCORDANCE WITH SECTION 104 OF THE FDOT STANDARD SPECIFICATIONS FOR ROAD AND BRIDGE CONSTRUCTION. THE PLAN SHALL INCLUDE, BUT NOT BE LIMITED TO, MEASURES TO CONTROL TURBIDITY, CONTAINMENT AND DISPOSAL OF CONSTRUCTION DEBRIS, AND A SPILL CONTROL REPORTING PLAN.
2. IF SUSPECT CONTAMINATED OR HAZARDOUS MATERIAL IS FOUND ON THE PROJECT OR ENCOUNTERED DURING CONSTRUCTION THE CONTRACTOR SHALL CEASE OPERATION IN THAT AREA. IMMEDIATELY NOTIFY FDEP AND THE PROJECT ENGINEER AND PROTECT THE IMMEDIATE AREA OF SUSPECT CONTAMINATED OR HAZARDOUS MATERIAL FROM FURTHER ACCESS. CONSTRUCTION COORDINATION WILL ARRANGE FOR THE INVESTIGATION, IDENTIFICATION AND/OR REMOVAL/REMEDIATION OF THE MATERIAL IN QUESTION AS NEEDED.
3. THE CONTRACTOR SHALL NOT BRING ANY HAZARDOUS MATERIALS ONTO THE PROJECT. SHOULD THE CONTRACTOR REQUIRE SUCH FOR PERFORMING THE CONTRACTED WORK, THE CONTRACTOR SHALL REQUEST WRITTEN PERMISSION FROM FDEP AND THE PROJECT ENGINEER. THE CONTRACTOR SHALL PROVIDE A COPY OF THE REQUEST TO THE FDEP AND THE PROJECT ENGINEER. THE CONTRACTOR SHALL PROVIDE THE FDEP AND THE PROJECT ENGINEER WITH A COPY OF THE MATERIAL SAFETY DATA SHEET (MSDS) FOR EACH HAZARDOUS MATERIAL PROPOSED FOR USE, AND PROVIDE A DESCRIPTION OF THE SPECIFIC MANNER IN WHICH THE MATERIAL WILL BE USED. THE PROJECT ENGINEER SHALL COORDINATE WITH THE FDEP PRIOR TO ISSUING WRITTEN APPROVAL TO THE CONTRACTOR. BECAUSE STATE LAW DOES NOT TREAT PETROLEUM PRODUCTS THAT ARE PROPERLY CONTAINERIZED AS HAZARDOUS MATERIALS, SUCH PRODUCTS DO NOT REQUIRE AN MSDS SUBMITTAL. ALL BULK PETROLEUM PRODUCTS STORED ON SITE SHALL REQUIRE PROPER STORAGE WHICH INCLUDES SECONDARY CONTAINMENT.
4. THE CONTRACTOR SHALL INSTRUCT ALL PERSONNEL OF THE POTENTIAL PRESENCE OF PROTECTED MAMMALS, REPTILES AND BIRDS. THE CONTRACTOR SHALL COMPLY WITH ALL FEDERAL AND STATE REQUIREMENTS AND CHAPTER 7-1.4 OF THE FDOT STANDARD SPECIFICATIONS FOR PROTECTED SPECIES.
5. SPECIFIC REQUIREMENTS FOR UNEXPECTED INTERACTION WITH CERTAIN PROTECTED SPECIES DURING WORK ACTIVITIES MAY BE FOUND AT: http://www.dot.state.fl.us/programmanagement/Implemented/URLinSpecs/files/endangeredwildlifeguidelines.pdf
6. THE CONTRACTOR SHALL LEGALLY DISPOSE OF SPOILS OFF SITE AND NOT IN THE ADJACENT WATER BODIES.
7. MANGROVES ARE PROTECTED UNDER THE 1996 MANGROVE TRIMMING AND PRESERVATION ACT. NO IMPACTS (TRIMMING/ALTERATION/REMOVAL)TO MANGROVES ARE PERMITTED WITHOUT FIRST OBTAINING A SEPARATE AUTHORIZATION FROM MIAMI-DADE DERM.
8. A BARGE IS NOT PERMITTED TO BE USED AT ANY POINT BEFORE, DURING OR AFTER CONSTRUCTION.

EROSION CONTROL NOTES:

1. ALL EROSION AND SEDIMENTATION CONTROLS SHALL BE INSTALLED PRIOR TO ANY LAND DISTURBING ACTIVITIES.
2. ALL EROSION AND SEDIMENTATION CONTROLS SHALL BE INSPECTED DAILY AND REPAIRS MADE AS NECESSARY TO ENSURE THE PROPER AND CONTINUED FUNCTION OF THE CONTROL(S).
3. ALL EROSION AND SEDIMENTATION CONTROL SHALL REMAIN IN PLACE UNTIL A PERMANENT VEGETATIVE COVER HAS BEEN ESTABLISHED.
4. UNDER NO CIRCUMSTANCES SHALL SEDIMENTS BE PERMITTED TO EXIT THE PROJECT LIMITS, INCLUDING TRACKING BY VEHICLES ONTO PAVED ROADWAYS. THE CONTRACTOR SHALL MAKE IMMEDIATE REPAIRS OR ENHANCEMENTS TO ANY EROSION CONTROL SYSTEM THAT ALLOWS THE RELEASE OF SEDIMENTS.
5. BISCAYNE BAT AQUATIC PRESERVE IS AN OUTSTANDING FLORIDA WATER. TURBIDITY SHALL NOT EXCEED 0 NTUs ABOVE BACKGROUND.
6. FLOATING TURBIDITY BARRIER SHALL BE INSTALLED IN AREAS DEVOID OF SEAGRASS.

MANUFACTURER'S REFERENCES AND SUBSTITUTIONS:

1. REFERENCE TO A PARTICULAR MANUFACTURER, TRADE NAME, OR CATALOG NUMBER ESTABLISHES THE QUALITY STANDARDS OF MATERIAL AND EQUIPMENT REQUIRED FOR THIS INSTALLATION IN ACCORDANCE WITH THE FDOT QUALIFIED PRODUCTS LIST, ETC. AND IS NOT INTENDED TO EXCLUDE OR SOLE-SOURCE PRODUCTS EQUAL/EQUIVALENT/SIMILAR IN QUALITY AND DESIGN. WHENEVER THE PLANS SPECIFY A PROPRIETARY PRODUCT, MATERIAL, EQUIPMENT, ETC. AND THE TERM "OR APPROVED EQUAL" IS NOT USED, "OR APPROVED EQUAL" SHALL BE IMPLIED.
2. EQUIVALENT PRODUCTS, MATERIALS, EQUIPMENT, ETC. MAY BE SUBMITTED BY THE CONTRACTOR TO THE ENGINEER FOR REVIEW AND APPROVAL AT THE TIME OF CONSTRUCTION (IE: AFTER THE BID), PROVIDED THAT THE CHANGE IS AT NO ADDITIONAL COST TO THE OWNER. ALL STRUCTURAL, ETC. DETAILS SHALL BE REVISED BY THE CONTRACTOR AS REQUIRED TO SUIT THE CERTIFIED DIMENSIONS, SPECIFICATIONS, ETC. OF THE COMPONENTS ACTUALLY BEING FURNISHED AS A RESULT OF A SUBSTITUTION APPROVED BY THE ENGINEER.

NOTE:
ELEVATIONS SHOWN HEREON ARE BASED ON NAVD '88 DATUM.
TO CONVERT TO NGVD '29 ADD 1.549' TO THE NAVD VALUE.

NOTE: THE SCALE OF THESE DRAWINGS HAVE CHANGED DUE TO REPRODUCTION.

Sunshine 811

Craig Burkhardt p:\structures\2020-jobs\2412.12 fdep barnacle house pavilion\07 structural dwgs\cadd 2412.12\G101_MM-DD-YY_61271C_F.dwg adobe pdf 24x36 Plotted: 3/31/2022 5:05:09 PM Saved: 10/27/2021 2:10:46 PM

SYMBOL	REVISION	DATE	SYMBOL	REVISION	DATE
A			C		
B			D		

DESIGNER : JRB
DRAWN BY: CAB
REVIEWED BY: CBL
ISSUE DATE: FEBRUARY 2021
COMP. FILE No.:
STATE PROJECT No.: 61271C

Department of Environmental Protection
Division of Recreation and Parks
Bureau of Design and Construction
3800 Commonwealth Blvd., Tallahassee, FL 32399 (850) 245-2157

Consultant :
WGI
2035 Vista Parkway
West Palm Beach, FL 33411
Phone No. 561.687.2220
Fax No. 561.687.1110
Registry No. 33574
WGI PROJECT NO. 2412.12

PROFESSIONAL REGISTRATION
JEFFREY R. BERGMANN, PE
50159

THE BARNACLE STATE PARK

SHEET TITLE
FDEP NOTES

PROJECT TITLE
PAVILION REPLACEMENT

SHEET NO.
G101

POST TRANSPLANT WATERING TO PROVIDE MOISTURE AND REDUCE ANY EXCESSIVE STRESS DUE TO DESSICATION. WATERING TO BE ADJUSTED ACCORDING TO CONDITIONS AND AT THE SUPERVISION AND DIRECTION OF THE ISA CERTIFIED ARBORIST.

TRANSPLANTING HOLE TO BE AT LEAST 1/3 LARGER THAN THE AREA THAT WAS TRENCHED FOR TRANSPLANTING.

TRANPLANT OPERATIONS TO BE SUPERVISED BY AN ISA CERTIFIED ARBORIST.

WOOD BATTENS FOR SUPPORT. BRACES DO NOT NAIL TO PALM.

WOOD BRACES PROVIDED - A MINIMUM OF THREE - TO BRACE AND SUPPORT PALM. THE CONTRACTOR SHALL BE RESPONSIBLE TO ADD BRACING NECESSARY TO PROVIDE FULL SUPPORT AND CHECK REGULARLY. RE-BRACE AS NEEDED. 4" X 4" AS NEEDED FOR ROYAL PALMS

SET THE PALM NO DEEPER THAN ITS ORIGINAL CONDITION

RECYCLED MULCH - 3" DEEP

SAUCER ALL AROUND FOR WATER RETENTION

BACKFILL WITH A MIXTURE OF 50% NATIVE SOIL AND 50% OF 50:50 TOPSOIL: SAND MIXTURE

WATER TO ELIMINATE WATER POCKETS WITH WATER HOSE APPLICATION OF FLOOD WATERING.

PALM TRANSPLANT DETAIL

REF: "THE LANDSCAPE MANUAL" DADE CO. DEPT OF PLANNING & ZONING 2001 N.T.S.

NOTES:

1. ALL TREES AND PALMS TO BE RELOCATED SHALL BE ROOT PRUNED AND CANOPY PRUNED ACCORDING TO ALL ACCEPTED STANDARDS AS DEFINED BY THE NATIONAL ARBORIST ASSOCIATION, AND ALL PRE AND POST-TRANSPLANT OPERATIONS SHALL BE COORDINATED WITH THE UTMOST CARE TO MINIMIZE DAMAGE AND TRANSPLANT SHOCK. WATERING-IN AND WATERING SCHEDULES SHALL BE SUBMITTED TO THE PROJECT MANAGER FOR REVIEW AND APPROVAL PRIOR TO RELOCATION.
2. ALL TREES AND PALMS TO BE RELOCATED SHALL BE STAKED AND BRACED TO INSURE STABILITY AND MINIMIZE ROOT DAMAGE DURING THE RECUPERATION PERIOD.
3. CONTRACTOR SHALL VERIFY WITH THE PROJECT SUPERINTENDANT THE PROPOSED LANDSCAPE AREAS PRIOR TO TREE AND PALM RELOCATION TO ENSURE PROPER RELOCATION AND MINIMIZE ANY FIELD DISCREPENCIES WITH RESPECT TO PROPOSED PAVING, BUILDING, AMENITIES, ABOVE AND BELOW GROUND UTILITIES AND LIMITS OF PROPERTY.
4. CONTRACTOR SHALL ESTABLISH AN IRRIGATION SYSTEM TO PROVIDE FOR PRE AND POST-TRANSPLANT IRRIGATION SCHEDULING. TREE AND PALM FERTILIZATION SHALL BE ESTABLISHED CONCURRENTLY WITH IRRIGATION PRE AND POST-FERTILIZATION, THIS PROCEDURE SHALL BE CONDUCTED TO OPTIMIZE PLANT ESTABLISHMENT.
5. CONTRACTOR SHALL COORDINATE WITH THE PROJECT SUPERINTENDANT TO PLANT ALL RELOCATED TREES AND PALMS AT THE FINAL GRADE OF SITE.
6. SEE "ROOT PRUNING DETAIL" AND "TREE TRANSPLANT DETAIL AS SHOWN ON PLANS.

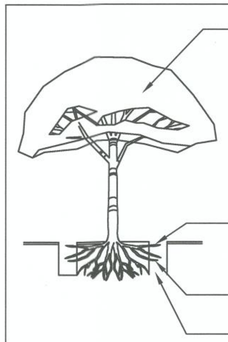

TREE TO BE LIGHTLY PRUNED BY HAND

WORK TO BE SUPERVISED BY AN ISA CERTIFIED ARBORIST OR A COMPANY WITH A CERTIFIED ISA ARBORIST ON STAFF.

ROOT PRUNING MUST BE DONE A MINIMUM OF 8 WEEKS PRIOR TO TRANSPLANTING.

WATERING MUST PROVIDE SUFFICIENT WATER TO MAINTAIN A MOIST CONDITION IN THE ROOTS. ONCE A WEEK OR MORE ACCORDING TO CONDITIONS.

TAKE EXTRA CARE NOT TO DAMAGE THE TRUNK OR BRANCHES

TRENCH TO BE LIGHTLY FILLED WITH FIBROUS MATERIAL SUCH AS LEAVES OR WOOD SHAVINGS. TRENCH SHALL SHARP INSTRUMENTS OR MACHINERY. RIPPING OR TEARING OF THE ROOTS IS STRICLY PROHIBITED.

ALL TORN ROOTS MUST BE TRIMMED TO SOLID WOOD WITH CLEAN, SHARP INSTRUMENTS.

DEPTH TO BE 18" MIN. TO 36" - VARIES WITH SIZE OF TREE.

ROOT PRUNING DETAIL

POST TRANSPLANT WATERING TO PROVIDE MOISTURE AND REDUCE ANY EXCESSIVE STRESS DUE TO DESSICATION. WATERING TO BE ADJUSTED ACCORDING TO CONDITIONS AND AT THE SUPERVISION AND DIRECTION OF THE ISA CERTIFIED ARBORIST.

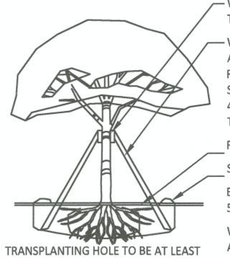

TRANSPLANTING HOLE TO BE AT LEAST 1/3 LARGER THAN THE AREA THAT WAS TRENCHED FOR TRANSPLANTING.

TRANSPLANT OPERATIONS TO BE SUPERVISED BY AN ISA CERTIFIED ARBORIST.

WOOD BATTENS FOR SUPPORT. BRACES DO NOT NAIL TO TREE.

WOOD BRACES PROVIDED - A MINIMUM OF THREE - TO BRACE AND SUPPORT TREE. THE CONTRACTOR SHALL BE RESPONSIBLE TO ADD BRACING NECESSARY TO PROVIDE FULL SUPPORT AND CHECK REGULARLY. RE-BRACE AS NEEDED. 4" X 4" AS NEEDED FOR LARGE OAKS SET THE TREE NO DEEPER THAN ITS ORIGINAL CONDITION

RECYCLED MULCH - 3" DEEP

SAUCER ALL AROUND FOR WATER RETENTION

BACKFILL WITH A MIXTURE OF 50% NATIVE SOIL AND 50% OF 50:50 TOPSOIL: SAND MIXTURE

WATER TO ELIMINATE WATER POCKETS WITH WATER HOSE APPLICATION OF FLOOD WATERING.

TREE TRANSPLANT DETAIL

REF: "THE LANDSCAPE MANUAL" DADE CO. DEPT OF PLANNING & ZONING 2001 N.T.S.

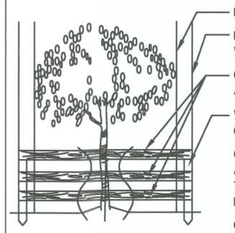

BARRIER TO FORM A CONTINUOUS CIRCLE AROUND THE TREE OR GROUP OF TREES.

DRIP LINE

FENCE TO EXTEND TO THE EDGE OF THE DRIPLINE OR MORE WHERE POSSIBLE

ORANGE CONSTRUCTION FENCING TO BE PLACED AROUND ALL EXISTING TREES TO REMAIN.

WOODEN STAKES (2" X 4" X 5" MIN.) OR REBAR ON 10' CENTERS - TO SUPPORT FENCING.

CONTRACTOR TO INSTALL PROTECTIVE FENCE BARRIER AROUND ALL EXISTING TREES TO REMAIN - AT THE START OF THE PROJECT - FENCE TO REMAIN IN PLACE THROUGHOUT THE DURATION OF THE PROJECT.

CONTRACTOR SHALL TAKE EXTRA CARE DURING EARTHWORK AND UTILITY OPERATIONS. TO PROTECT ALL EXISTING TREES - AND SHALL BE RESPONSIBLE TO REPLACE ANT TREES DAMAGED DURING CONSTRUCTION.

TREE PROTECTION DETAIL

N.T.S.

TREE TRANSPLANTING PROCEDURAL SPECIFICATIONS

PURPOSE: TO MAXIMIZE THE SUCCESS OF TREE TRANSPLANTING OPERATIONS.

ALL STANDARDS SHALL MEET OR EXCEED THE ANSI A300 (PART 6)-2005 (TRANSPLANTING) STANDARD PRACTICES AND ANY APPLICABLE LOCAL CODES.

CONTRACTOR SHALL EMPLOY AN ISA CERTIFIED ARBORIST WITH VERIFIABLE TREE TRANSPLANT EXPERIENCE AS THE "EXPERT ARBORIST OF RECORD" TO CARRY OUT THE FOLLOWING DUTIES:

SHALL PROVIDE A TREE RELOCATION PLAN FOR APPROVAL BY THE OWNERS AGENT BEFORE ANY WORK CAN COMMENCE.

SHALL MAKE SITE VISITS PRIOR TO ANY RELOCATION WORK TO INSPECT THAT THE PROPER PREPARATION WORK IS PERFORMED TO THE TREE RELOCATION GUIDELINES.

SHALL MAKE SITE VISITS DURING RELOCATION WORK TO INSURE WORK IS BEING PERFORMED TO THE TREE RELOCATION GUIDELINES.

SHALL DOCUMENT ALL INSPECTIONS AND PROVIDE REPORT TO THE OWNER'S AGENT WITHIN 5 BUSINESS DAYS OF THE SITE VISIT.

SHALL SUBMIT PRIOR TO FINAL ACCEPTANCE BY OWNER'S AGENT, A POST-TRANSPLANT CARE GUIDE FOR UP TO THREE YEARS THAT INCLUDES WATERING, FERTILIZATION, PRUNING, PEST CONTROL, STAKING, ETC, FOR APPROVAL.

NOTE:
ELEVATIONS SHOWN HEREON ARE BASED ON NAVD '88 DATUM.
TO CONVERT TO NGVD '29 ADD 1.549' TO THE NAVD VALUE.

NOTE: THE SCALE OF THESE DRAWINGS HAVE CHANGED DUE TO REPRODUCTION.

Sunshine811

SYMBOL	REVISION	DATE
C		
D		

SYMBOL	REVISION	DATE
A		
B		

ISSUE DATE: FEBRUARY 2021
COMP. FILE No.:
STATE PROJECT No.: 61271C

DESIGNER : JRB
DRAWN BY: CAB
REVIEWED BY: CBL
CONSULTANT :

WGI
2035 Vista Parkway
West Palm Beach, FL 33411
Phone No. 561.687.2220
Fax No. 561.687.1110
Registry No. 33574

WGI PROJECT NO. 2412.12

Department of Environmental Protection
Division of Recreation and Parks
Bureau of Design and Construction
3800 Commonwealth Blvd., Tallahassee, FL 32399 (850) 245-2157

PROFESSIONAL REGISTRATION
JEFFREY C. BERGMANN, PE
No. 50159
STATE OF FLORIDA
PROFESSIONAL ENGINEER

THE BARNACLE STATE PARK

SHEET TITLE: TREE PROTECTION AND RELOCATION NOTES

PROJECT TITLE: PAVILION REPLACEMENT

SHEET NO. G102

Craig Burkhardt p:\structures\2020-jobs\2412.12 fdep barnacle house pavilion\07 structural dwgs\cadd 2412.12\G102-MM-DD-YY_61271C_F.dwg adobe pdf 24x36 Plotted: 3/31/2022 5:05:14 PM Saved: 10/27/2021 2:10:08 PM

DESIGN CRITERIA

DESIGNED IN ACCORDANCE WITH FLORIDA BUILDING CODE 2020 (FBC)

WIND DESIGN IN ACCORDANCE WITH ASCE 7-10:

$VELOCITY_{ULT}$ = 175.0 MPH (3 SEC.)
$VELOCITY_{ASD}$ = 135.6 MPH (3 SEC.)
RISK CATEGORY II
EXPOSURE = D
GCPI = +/- 0.00
Q_Z = 41.2 PSF (SERVICE)

SEISMIC DESIGN DATA:

RISK CATEGORY II
I_S = 1.0
S_S = 0.041
S_1 = 0.02
SITE CLASS = D
S_{DS} = 0.044
S_{D1} = 0.032
SEISMIC DESIGN CATEGORY = A
R = 5
C_S = 0.008
V = 0.008W

SLAB LOAD = 100 PSF
ROOF DEAD LOAD = 20 PSF
ROOF LIVE LOAD = 20 PSF
GROUND SNOW LOAD = 0 PSF

ELEVATION DATA:

1. ALL ELEVATIONS SHOW REFER TO THE NORTH AMERICAN VERTICAL DATUM OF 1988 (NAVD 88).

DIVISION 1: GENERAL CONDITION

1. STRUCTURAL DRAWINGS SHALL BE USED IN CONJUNCTION WITH JOB SPECIFICATIONS AND ARCHITECTURAL, MECHANICAL, ELECTRICAL, PLUMBING, AND SITE DRAWINGS. CONSULT THESE DRAWINGS FOR SLEEVES, DEPRESSIONS, AND OTHER DETAILS NOT SHOWN ON STRUCTURAL DRAWINGS.
2. ALL DIMENSIONS AND CONDITIONS MUST BE VERIFIED IN THE FIELD. ANY DISCREPANCIES SHALL BE BROUGHT TO THE ATTENTION OF THE ENGINEER BEFORE PROCEEDING WITH THE AFFECTED PART OF THE WORK.
3. THE STRUCTURE IS DESIGNED TO BE SELF SUPPORTING AND STABLE AFTER THE BUILDING IS COMPLETE. IT IS THE CONTRACTOR'S RESPONSIBILITY TO DETERMINE ERECTION PROCEDURES AND SEQUENCE TO ENSURE SAFETY OF THE BUILDING AND ITS COMPONENTS DURING ERECTION. THIS INCLUDES THE ADDITION OF NECESSARY SHORING, SHEETING, TEMPORARY BRACING, GUYS OR TIE DOWNS.
4. CONTRACTOR SHALL PROVIDE TEMPORARY SUPPORTS FOR ALL COVERED PORCH COLUMNS AND BEAMS AS NEEDED THROUGHOUT DEMOLITION AND NEW CONSTRUCTION.
5. ALL WORK SHALL BE DONE IN ACCORDANCE WITH ALL PERTINENT LOCAL, STATE, AND FEDERAL BUILDING REGULATIONS.

SHOP DRAWINGS:

1. THE ENGINEER'S REVIEW IS ONLY FOR CONFORMANCE WITH THE DESIGN CONCEPT OF THE PROJECT AND COMPLIANCE WITH THE INFORMATION GIVEN IN THE CONTRACT DOCUMENTS. THE CONTRACTOR IS RESPONSIBLE FOR DIMENSIONS TO BE CONFIRMED AND CORRELATED AT THE SITE; FOR INFORMATION THAT PERTAINS SOLELY TO THE FABRICATION, PROCESSES, OR TO THE MEANS, METHODS, TECHNIQUES, SEQUENCES AND PROCEDURES OF CONSTRUCTION; AND FOR COORDINATION OF THE WORK OF ALL TRADES. THE ENGINEER'S APPROVAL OF A SPECIFIC ITEM SHALL NOT INCLUDE APPROVAL OF AN ASSEMBLY OF WHICH THE ITEM IS A COMPONENT.

DIVISION 2: SITE WORK

INSPECTIONS:

1. ALL SUB-GRADE SOIL COMPACTION AND WELDED/BOLTED STEEL CONNECTIONS SHALL BE INSPECTED IN ACCORDANCE WITH THE REQUIREMENTS OF THE FLORIDA BUILDING CODE 2017.

FOUNDATION:

1. INDIVIDUAL FOOTING AREAS AND SLAB ON GRADES SHALL BE EXCAVATED, FORMED AND CONCRETED IN THE DRY. THE EXCAVATION BOTTOMS SHALL BE DENSIFIED (TAMPED) WITH A WALK-BEHIND TYPE COMPACTOR PRIOR TO PLACEMENT OF REINFORCING STEEL. THE COMPACTIVE EFFORTS SHALL ACHIEVE A MINIMUM OF 95 PERCENT OF THE ASTM D 1557 MAXIMUM DRY DENSITY TO A DEPTH OF 12 INCHES BELOW THE FOOTING SUBGRADE SURFACE. ANY SOFT, COMPRESSIBLE OR OTHERWISE UNSUITABLE SOILS THAT ARE FOUND AT OR BENEATH THE FOOTING BOTTOMS SHALL BE REMOVED AND REPLACED WITH STRUCTURAL BACKFILL.
2. CENTERLINES OF WALLS AND COLUMNS SHALL COINCIDE WITH THE FOUNDATION CENTERLINES, UNLESS SPECIFICALLY SHOWN OTHERWISE.
3. SLAB ON GRADE CONTRACTION JOINTS SHALL BE TOOLED OR SAW-CUT (WITHIN 6 HOURS OF POURING) JOINT PATTERN SHALL BE APPROXIMATELY SQUARE WITH NO DIMENSION EXCEEDING 35 FEET IN ANY DIRECTION AND SHALL INTERSECT AT ALL COLUMN LOCATIONS PROVIDE DIAMOND PATTERN AROUND ALL COLUMNS - TYPICAL.

CLEARING AND GRUBBING:

1. CLEARING AND GRUBBING SHALL BE PERFORMED WITHIN THE LIMITS OF THE PROJECT WORK IN ACCORDANCE WITH SECTION 110, FDOT SPECIFICATIONS, FOR "STANDARD CLEARING AND GRUBBING," DEFINED IN PARAGRAPHS 110-2 AND 110-3. THIS ITEM OF WORK SHALL INCLUDE, BUT IS NOT LIMITED TO, THE COMPLETE REMOVAL AND DISPOSAL OF ALL TREES, BRUSH, STUMPS, ROOTS, GRASS, WEEDS, RUBBISH AND ALL OTHER OBSTRUCTIONS TO A DEPTH OF 18 INCHES BELOW NATURAL GROUND OR DESIGN GRADE WHICHEVER IS LOWER THE AREAS TO BE CLEARED AND GRUBBED GENERALLY CONSIST OF THE RIGHTS-OF-WAYS, DRAINAGE & UTILITY EASEMENTS AND SELECTED LOTS. HOWEVER, IT SHALL BE NOTED THAT PRIOR TO THE REMOVAL OF ANY TREES FROM THE LOTS, THE CONTRACTOR SHALL CONFIRM THEIR REMOVAL WITH THE OWNER.
2. ALL MATERIAL SHALL BE REMOVED FROM THE SITE OF THE PROJECT, AND SHALL BE DISPOSED OF IN ACCORDANCE WITH ALL LOCAL, REGIONAL, STATE AND FEDERAL LAWS, REGULATIONS OR ORDINANCES. MATERIAL MAY BE BURNED UPON RECEIVING ALL REQUIRED PERMITS. ANY UNBURNED REMAINS SHALL BE LEGALLY DISPOSED OF.
3. MANGROVES ARE A PROTECTED RESOURCE. ALL MANGROVE TRIMMING AND/OR ALTERATION SHALL BE CONDUCTED IN ACCORDANCE WITH THE 1996 MANGROVE TRIMMING AND PRESERVATION ACT. NO MANGROVES SHALL BE REMOVED FROM THE SITE. MANGROVES MAY BE TRIMMED ONCE AUTHORIZED BY DERM,

FILL:

1. ALL IMPORTED FILL SHALL BE FREE OF DELETERIOUS MATERIAL NONCOHESIVE AND BE COMPACED IN PLACE TO 95% ASTM D1557.

HELICAL PILES:

1. HELICAL PILES TO BE A. B. CHANCE RS3500.3 WITH 8 INCH DIAMETER, 10 INCH DIAMETER AND 12 INCH DIAMETER HELICES.
2. PILES SHALL BE INSTALLED TO PROVIDE A MINIMUM SERVICE AXIAL COMPRESSIVE CAPACITY OF 30 KIP AND SERVICE TENSILE CAPACITY OF 5 KIP. MINIMUM INSTALLATION TORQUE SHALL NE 3,600 FT-LB. ESTIMATED EMBEDMENT = +/- 25 FEET.
3. PILE SHAFT TO BE GROUTED SOLID.
4. TOP OF THE HELICAL PILE TO HAVE A CHANCE CONSTRUCTION BRACKET WITH FOUR 5/8 INCH Ø NELSON STUDS x 4 INCHES LONG.
5. MINIMUM EMBEDMENT LENGTH OF BASE PLATE BRACKET SHALL BE 6 INCHES MIN. ABOVE BOTTOM OF PILE CAP.
6. **CONTRACTOR SHALL PRE-AUGER 7 - 10 FEET TO ADVANCE HELICAL PILES INTO WEATHERED LIMESTONE.**

DIVISION 3: CONCRETE

CONCRETE NOTES:

1. NORMAL WEIGHT CONCRETE (145 PCF) 28 DAY COMPRESSIVE STRENGTH: FOUNDATIONS, SLAB AND WALLS = 5,000 PSI.
2. MAXIMUM WATER TO CEMENT RATIO = 0.40.
3. REINFORCEMENT SHALL BE HOT DIPPED GALVANIZED, ASTM A615 GRADE 60.
4. MINIMUM CONCRETE COVER SHALL BE: (INCHES)

SLAB:	2
EXPOSED UNPROTECTED CONCRETE:	4
FORMED CONCRETE BELOW GRADE:	4
UNFORMED CONCRETE BELOW GRADE:	4

5. CONCRETE CONSTRUCTION TECHNIQUES SHALL CONFORM TO THE "SPECIFICATIONS FOR STRUCTURAL CONCRETE FOR BUILDINGS" (ACI 301-05).
6. REINFORCING STEEL IN FOOTINGS SHALL BE ASSEMBLED AS MATS WITH BARS EQUALLY SPACED AND WIRED TOGETHER AT EACH INTERSECTION BEFORE CONCRETE IS PLACED.
7. CENTER ALL FOOTINGS ON WALL OR COLUMN ABOVE UNLESS OTHERWISE INDICATED.
8. FOOTING ELEVATIONS ARE TO TOP OF FOOTING (T.F.) AND SLAB ELEVATIONS ARE TO TOP OF SLABS (T.S.)
9. DOWEL WALL REINFORCING TO FOOTING OR PILE CAP WITH SAME SIZE AND NUMBER OF DOWELS AS VERTICAL BARS ABOVE.

FORMWORK AND SHORING:

1. NO-STRUCTURAL CONCRETE SHALL BE STRIPPED UNTIL IT HAS REACHED AT LEAST TWO-THIRDS OF THE 28 DAY DESIGN STRENGTH. DESIGN, ERECTION AND REMOVAL OF ALL FORMWORK, SHORES AND RE-SHORES SHALL MEET THE REQUIREMENTS SET FORTH IN ACI STANDARDS 347 AND 301.

NOTE:
ELEVATIONS SHOWN HEREON ARE BASED ON NAVD '88 DATUM.
TO CONVERT TO NGVD '29 ADD 1.549' TO THE NAVD VALUE.

CONCRETE MASONRY NOTES:

1. REINFORCED CONCRETE MASONRY CONSTRUCTION SHALL CONFORM TO THE "BUILDING CODE REQUIREMENTS FOR CONCRETE MASONRY STRUCTURES" (ACI 530).
2. ALL REINFORCED MASONRY CELLS SHALL BE GROUTED WITH 3,000 PSI GROUT MIX.
3. WHEN GROUTING IS STOPPED FOR ONE HOUR OR LONGER, THE GROUT SHALL BE STOPPED 1.5 INCHES BELOW THE TOP OF THE UPPERMOST UNIT.
4. GROUT SHALL BE PLACED IN LIFTS NOT TO EXCEED 11 FEET 4 INCHES MAXIMUM.
5. MASONRY GROUT SHALL BE MIXED WITH SUFFICIENT WATER TO GIVE A FLUID CONSISTENCY WITHOUT SEGREGATION OF MATERIALS.
6. GROUT SUMP TO BE MAINTAINED BETWEEN 10 AND 11 INCHES.
7. MASONRY UNITS SHALL CONFORM TO THE ASTM C90 SPECIFICATIONS FOR NORMAL WEIGHT CONCRETE MASONRY UNITS.
8. ALL BELOW GRADE MASONRY CELLS SHALL BE GROUTED/FILLED SOLID.
9. REINFORCEMENT SHALL BE HOT DIPPED GALVANIZED, ASTM A615 GRADE 60.

STRUCTURAL STEEL NOTES:

1. STRUCTURAL STEEL CONSTRUCTION SHALL CONFORM TO THE AISC "SPECIFICATION FOR THE DESIGN, FABRICATION AND ERECTION OF STRUCTURAL STEEL FOR BUILDINGS."
2. SHOP DRAWINGS SHALL BE PREPARED UNDER THE SUPERVISION OF A REGISTERED PROFESSIONAL ENGINEER REGISTERED IN THE STATE OF FLORIDA, INCLUDING COMPLETE DETAILS AND SCHEDULES FOR FABRICATION AND ASSEMBLY OF STRUCTURAL STEEL MEMBERS WITH PROCEDURES AND DIAGRAMS.
3. BOLTED CONNECTIONS SHALL BE BEARING-TYPE CONNECTIONS UNLESS OTHERWISE NOTED.
4. SHOP CONNECTIONS SHALL BE WELDED OR BOLTED. FIELD CONNECTIONS SHALL BE BOLTED EXCEPT AS NOTED.
5. CONNECTIONS NOT SHOWN SHALL BE DESIGNED IN ACCORDANCE WITH THE AISC "MANUAL OF STEEL CONSTRUCTION."
6. BOLT INSTALLATION SHALL BE DONE BY TURN-OF-NUT METHOD UNLESS OTHERWISE APPROVED BY THE ENGINEER.

DIVISION 5: METALS CONTINUED

STEEL:

1. STRUCTURAL STEEL WORK SHALL CONFORM TO 2006 IBC 2205, AISC 341-05, AISC 358-05, AND AISC 360-05.
2. STRUCTURAL SHAPES

W:	F_Y = 36 KSI (ASTM A992)
M,S,C,MC AND L:	F_Y = 30 KSI 316 STAINLESS STEEL (ASTM F593 GR. 30)
HP:	F_Y = 50 KSI (ASTM A572 GR. 50)
HSS RECTANGULAR:	F_Y = 46 KSI (ASTM A500 GR. B)
HSS ROUND:	F_Y = 42 KSI (ASTM A 500 GR. B)
PIPE:	F_Y = 30 KSI 316 STAINLESS STEEL (ASTM F593 GR. 30)

ALL STRUCTURAL STEEL SHALL BE PROPERLY PAINTED AND PRIMED PER MANUFACTURER'S REQUIREMENTS.

3. PLATES AND BARS: 316 STAINLESS STEEL AS NOTED.
4. STRUCTURAL FASTENERS

HIGH-STRENGTH BOLTS: F_U = 105-150 KSI (ASTM A325-X, A490-X) - NO THREADS IN SHEAR PLANE
HIGH-STRENGTH BOLTS SHALL BE FURNISHED WITH DIRECT TENSION INDICATOR WASHERS

COMMON BOLTS:	F_Y = 30 KSI 316 STAINLESS STEEL (ASTM F593 GR. 30)
NUTS:	F_Y = 30 KSI 316 STAINLESS STEEL (ASTM F593 GR. 30)
WASHERS:	F_Y = 30 KSI 316 STAINLESS STEEL (ASTM F593 GR. 30)
SHEAR STUDS:	F_U = 65 KSI (ASTM A108)
THREADED RODS:	F_Y = 30 KSI 316 STAINLESS STEEL (ASTM F593 GR. 30)
ANCHOR RODS:	F_Y = 30 KSI 316 STAINLESS STEEL (ASTM F593 GR. 30)

5. WELDING: F_U = 70 KSI

WELDING WORK SHALL COMPLY WITH THE AMERICAN WELDING SOCIETY (AWS) "STRUCTURAL WELDING CODE," EXCLUDING ITEMS CONFLICTING WITH AISC REQUIREMENTS.

6. METAL ROOF:

ROOF COLOR TO BE SELECTED BY OWNER. GENERAL CONTRACTOR TO SUBMIT COLOR SAMPLES TO OWNER FOR APPROVAL.

CLEANING AND COATING OF FABRICATED SS316 STEEL CONNECTIOS.

1. SURFACE PREPARATION
   A. REMOVE ANY OIL OR GREASE BEFORE BLASTING IN ACCORDANCE WITH 22PC-SP1 SOLVENT CLEANING. ABRASIVE BLAST ALL SS316 STEEL SURFACES IN ACCORDANCE WITH SSPC-SP16.
   B. ALL SURFACES MUST BE CLEAN AND DRY PRIOR TO THE APPLICATION OF ANY COATINGS. PAY PARTICULAR ATTENTION FO EDGES, BOLTS AND CORNERS.
2. COATING SYSTEM
   A. PRIME COAT: BARE PREPARED SS316 STEEL. APPLY (1) COAT OF TNEMEC SERIES N69 HI-BUILD EPOXOLINE II POLYAMIDOAMINE EPOXY PRIMER AT 2.0-3.0 MILS DFT.
   B. FINISH COAT: APPLY (1) COAT OF TNEMEC SERIES 1096 ENDURA-SHEILD BLACK AT A RATE OF 3.0-5.0 MILS DFT.

DIVISION 6: WOOD

ALL WOOD SHALL BE PRESSURE-TREATED.

TIMBER SPECIFICATIONS:

1. WOOD PRESERVATIVE AND RETENTION (PCF):

STRINGERS, BLOCKING AND PILE CAP TIMBERS	ACQ-B-D 0.6
POSTS, RAILS, AND PICKETS	ACQ-B-D 0.6

SUBMIT PRESERVATIVE TREATMENT AND RETENTION FOR APPROVAL. PRESERVATIVES INCLUDED IN THE "SAWN PRODUCTS - UC4B" IN COMMODITY SPECIFICATION A AND IN TABLE 1 OF SECTION 4 IN THE AMERICAN WOOD PRODUCTION ASSOCIATION STANDARD U1-17 MAY BE SUBSTITUTED UPON CLIENT'S/OWNER'S APPROVAL.

2. SOUTHERN YELLOW PINE (SYP) GRADE NO. 1 DIMENSIONAL LUMBER.
3. LUMBER SIZES INDICATED ARE NOMINAL.
4. ALL SCREWS, NAILS, NUTS, BOLTS, WASHERS, AND FASTENERS TO BE TYPE 316 STAINLESS STEEL (SS) UNLESS NOTED OTHERWISE. SIMPSON HARDWARE TO USE TYPE 316 STAINLESS STEEL CONNECTORS AND FASTENERS. STAINLESS STEEL DECK SCREWS SHALL BE ALIGNED WITH CHALK SNAP LINE. DECKING SHALL BE PRE-DRILLED FOR A FLUSH SCREW SET. ALL ALUMINUM TO BE 6061-T6. ALL ALUMINUM IN CONTACT WITH CONCRETE AND WOOD SHALL BE COATED WITH BITUMASTIC EPOXY.
5. SOUTHERN YELLOW PINE GRADE NO. 1 STRINGERS AND PILE CAP TIMBERS TO BE WRAPPED IN GRACE VYCOR DECK PROTECTOR AT ALL POINTS OF CONTACT BETWEEN WOOD AND GALVANIZED CONNECTORS AND BENEATH DECKING.

ROOF TRUSSES:

1. CONTRACTOR SHALL SUBMIT TIMBER ROOF TRUSS SHOP DRAWINGS IN ACCORDANCE WITH THE FLORIDA BUILDING CODE 2017 FOR REVIEW AND APPROVAL, SIGNED AND SEALED BY A SPECIALTY ENGINEER REGISTERED IN THE STATE OF FLORIDA.

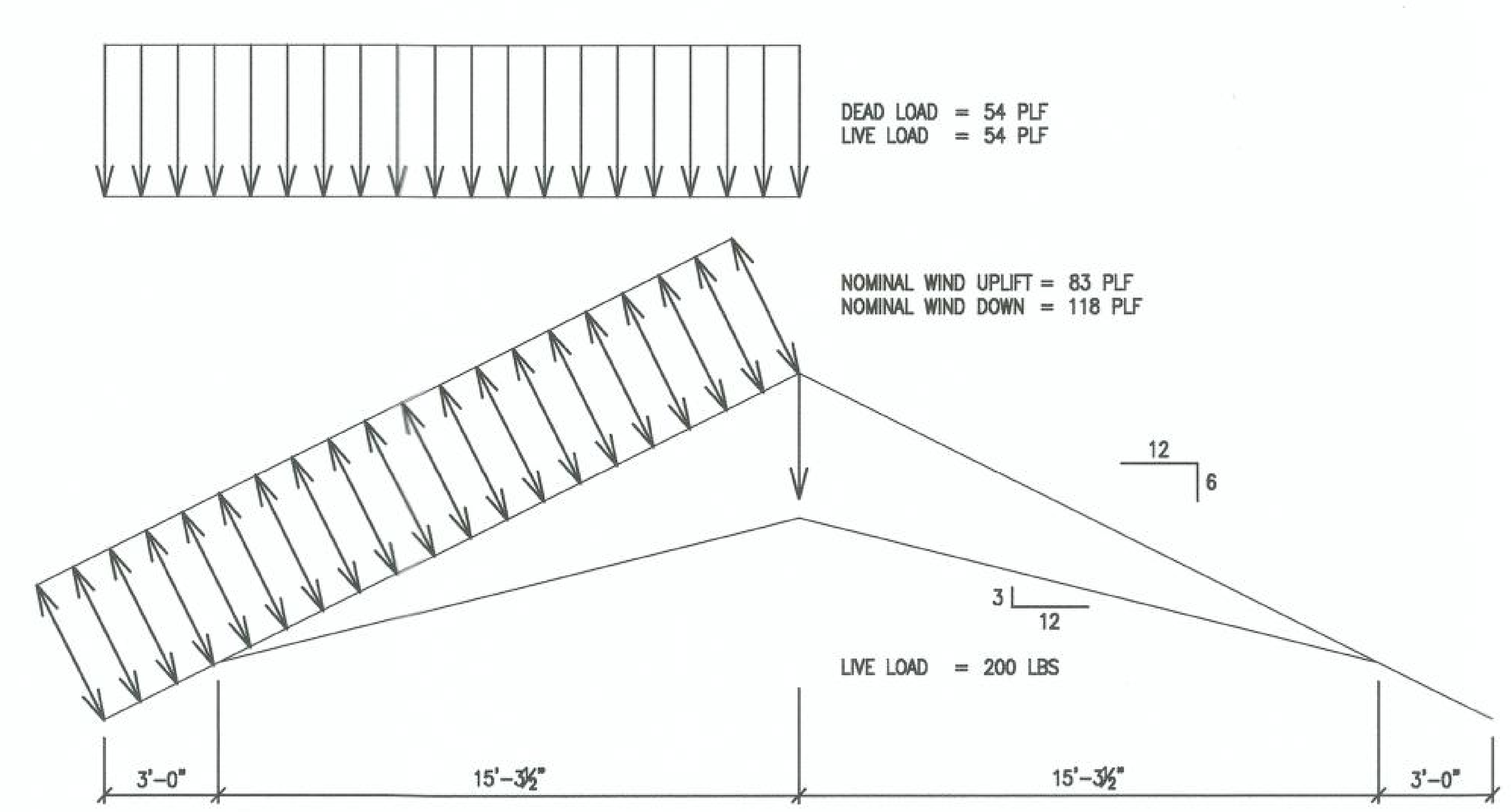

LIST OF FREQUENTLY USED ABBREVIATIONS

AAMA	-	AMERICAN ARCHITECTURAL MANUFACTURERS ASSOCIATION
AASHTO	-	AMERICAN ASSOCIATION OF STATE HIGHWAY AND TRANSPORTATION OFFICIALS
AC.	-	ACRE
ACI	-	AMERICAN CONCRETE INSTITUTE
ACQ	-	ALKALINE COPPER QUATERNARY
AISC	-	AMERICAN INSTITUTE OF STEEL CONSTRUCTION
ANSI	-	AMERICAN NATIONAL STANDARDS INSTITUTE
ASCE	-	AMERICAN SOCIETY OF CIVIL ENGINEERS
ASD	-	ALLOWABLE STRESS DESIGN
ASTM	-	AMERICAN SOCIETY FOR TESTING AND MATERIALS
AWS	-	AMERICAN WELDING SOCIETY
B/L, ℄	-	BASELINE
BOT	-	BOTTOM
BRG	-	BEARING
CA-A	-	COPPER AZOLE, TYPE A
CA-B	-	COPPER AZOLE, TYPE B
CAP	-	CORRUGATED ALUMINUM PIPE
CCA	-	CHROMATED COPPER ARSENATE
CE	-	CONTROL ELEVATION
CIP	-	CAST-IN-PLACE
C.J.	-	CONTROL JOINT
C/L, ℄	-	CENTERLINE
CLR	-	CLEAR
CMP	-	CORRUGATED METAL PIPE
CONST.	-	CONSTRUCT
CONT.	-	CONTINUOUS
CPP	-	CORRUGATED PLASTIC PIPE
CY	-	CUBIC YARD(S)
DERM	-	DEPARTMENT OF ENVIRONMENTAL RESOURCES MANAGEMENT
DFT	-	DRY FILM THICKNESS
DIA., ø	-	DIAMETER
EB	-	END BENT
EF	-	EACH FACE
EL., ELEV.	-	ELEVATION
EMBED	-	EMBEDMENT
ES	-	EACH SIDE
EQ.	-	EQUAL
EX., EXIST.	-	EXISTING
EW	-	EACH WAY
FAC	-	FLORIDA ADMINISTRATIVE CODE
FBC	-	FLORIDA BUILDING CODE
FDOT	-	FLORIDA DEPARTMENT OF TRANSPORTATION
FIN. FL.	-	FINISH FLOOR
FT	-	FOOT
GR	-	GRADE
HDG	-	HOT-DIPPED GALVANIZED
INV	-	INVENTORY
KSI	-	KILOPOUNDS PER SQUARE INCH
LB(S)	-	POUND(S)
LF	-	LINEAR FEET
LT	-	LEFT
LRFD	-	LOAD RESISTANCE FACTOR DESIGN
INV.	-	MAXIMUM
MIN.	-	MINIMUM
NAVD '88	-	NORTH AMERICAN VERTICAL DATUM OF 1988
NGVD '29	-	NATIONAL GEODETIC VERTICAL DATUM OF 1929
NEC	-	NATIONAL ELECTRICAL CODE
NF	-	NEAR FACE
NFPA	-	NATIONAL FIRE PROTECTION ASSOCIATION
NTS	-	NOT TO SCALE
O.C.	-	ON CENTER
OCEW	-	ON CENTER EACH WAY
O.D.	-	OUTSIDE DIAMETER
OPR	-	OPERATING
PCF	-	POUNDS PER CUBIC FOOT
PCI	-	POUNDS PER CUBIC INCH
PL, ℄	-	PLATE
PSF	-	POUNDS PER SQUARE FOOT
PSI	-	POUNDS PER SQUARE INCH
RCP	-	REINFORCED CONCRETE PIPE
RDWY	-	ROADWAY
RT	-	RIGHT
R/W	-	RIGHT OF WAY
SEC.	-	SECONDS
SDWK	-	SIDEWALK
SF	-	SQUARE FEET
SFWMD	-	SOUTH FLORIDA WATER MANAGEMENT DISTRICT
SHW	-	SEASONAL HIGH WATER
SHLD	-	SHOULDER
SIM.	-	SIMILAR
SPA	-	SPACING, SPACES
SS	-	TYPE 316 STAINLESS STEEL
SYP	-	SOUTHERN YELLOW PINE
TSP	-	TECHNICAL SPECIAL PROVISION
TYP	-	TYPICAL
ULT	-	ULTIMATE
UON	-	UNLESS OTHERWISE NOTED
VAR	-	VARIES
W/	-	WITH

NOTE: THE SCALE OF THESE DRAWINGS HAVE CHANGED DUE TO REPRODUCTION.

Sunshine 811

SYMBOL	REVISION	DATE	SYMBOL	REVISION	DATE
A			C		
B			D		

ISSUE DATE: FEBRUARY 2021
COMP. FILE No.:
STATE PROJECT No.: 61271C

DESIGNER : JRB
DRAWN BY: CAB
REVIEWED BY: CBL
Consultant :

Department of Environmental Protection
Division of Recreation and Parks
Bureau of Design and Construction
3800 Commonwealth Blvd., Tallahassee, FL 32399 (850) 245-2157

WGI
2035 Vista Parkway
West Palm Beach, FL 33411
Phone No. 561.687.2220
Fax No. 561.687.1110
Registry No. 33574
WGI PROJECT NO. 2412.12

PROFESSIONAL REGISTRATION
JEFFREY R. BERGMANN, PE
50159

THE BARNACLE STATE PARK

SHEET TITLE
GENERAL NOTES

PROJECT TITLE
PAVILION REPLACEMENT

SHEET NO.
G103

Craig Burkhardt p:\structures\2020-jobs\2412.12 fdep barnacle house pavilion\07 structural dwgs\cadd 2412.12\G103_MM-DD-YY_61271C_F.dwg adobe pdf 24x36 Plotted: 3/31/2022 5:05:20 PM Saved: 10/27/2021 2:10:39 PM

BORING LOCATION PLAN

0 50'

PLAN SCALE

LEGEND

- APPROXIMATE LOCATION OF AUGER BORING
- APPROXIMATE LOCATION OF SPT BORING

DRAWN BY:	APPROVED BY:	ENGINEER OF RECORD:		SCALE:	PROJECT NUMBER:	GEOTECHNICAL ENGINEERING SERVICES	SHEET 1
SW	KHS	KEVIN H. SCOTT, P.E.	TIERRA	NOTED	6511-14-175-004	BARNACLE HISTORIC STATE PARK	
CHECKED BY: JMN	DATE: MAY 2020	FLORIDA LICENSE NO.: 65514	7351 Temple Terrace Highway, Tampa, Florida 33637, Phone: 813-989-1354 Fax: 813-989-1355, FL Cert. No.: 6486			MIAMI-DADE COUNTY, FLORIDA	

NOTE:
ELEVATIONS SHOWN HEREON ARE BASED ON NAVD '88 DATUM.
TO CONVERT TO NGVD '29 ADD 1.549' TO THE NAVD VALUE.

NOTE: THE SCALE OF THESE DRAWINGS HAVE CHANGED DUE TO REPRODUCTION.

Sunshine811

ISSUE DATE: FEBRUARY 2021	SYMBOL	REVISION	DATE	SYMBOL	REVISION	DATE
COMP. FILE No.:	A			C		
STATE PROJECT No.: 61271C	B			D		

DESIGNER: JRB
DRAWN BY: CAB
REVIEWED BY: CBL
CONSULTANT:

WGI
2035 Vista Parkway
West Palm Beach, FL 33411
Phone No. 561 687-2220
Fax No. 561 687-1110
Registry No. 33574

WGI PROJECT NO. 2412.12

Department of Environmental Protection
Division of Recreation and Parks
Bureau of Design and Construction
3800 Commonwealth Blvd., Tallahassee, FL 32399 (850) 245-2157

INFORMATION ONLY

SHEET TITLE: SOIL BORING DATA (1)

PROJECT TITLE: THE BARNACLE STATE PARK — PAVILION REPLACEMENT

SHEET NO. G104

Craig Burkhardt p:\structures\2020-jobs\2412.12 fdep barnacle house pavilion\07 structural dwgs\cadd 2412.12\G104_MM-DD-YY_61271C_F.dwg adobe pdf 24x36 Plotted: 3/31/2022 5:05:29 PM Saved: 10/27/2021 2:10:49 PM

SOIL PROFILES

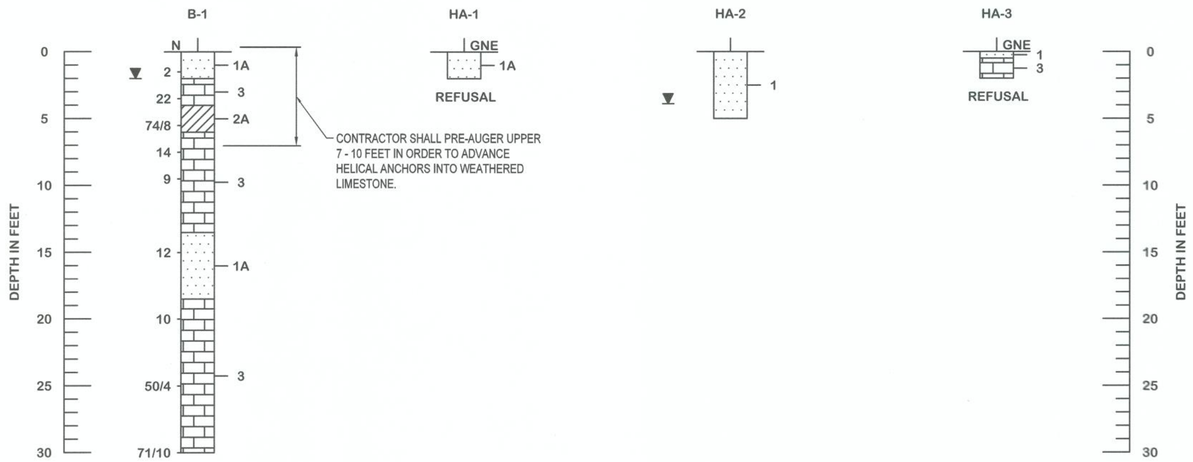

LEGEND

1 — LIGHT BROWN TO BROWN SAND TO SAND WITH SILT (SP/SP-SM)

2 — ORANGE-BROWN SANDY CLAY TO CLAY (CL/CH)

3 — CALCAREOUS CLAY TO WEATHERED LIMESTONE

A - WITH LIMESTONE FRAGMENTS

▼ GROUNDWATER LEVEL ENCOUNTERED DURING INVESTIGATION

N SPT N-VALUE IN BLOWS/FOOT FOR 12 INCHES OF PENETRATION (UNLESS OTHERWISE NOTED)

SP UNIFIED SOIL CLASSIFICATION SYSTEM (ASTM D 2488) GROUP SYMBOL AS DETERMINED BY VISUAL REVIEW

GNE GROUNDWATER TABLE NOT ENCOUNTERED

50/4 NUMBER OF BLOWS FOR 4 INCHES OF PENETRATION

REFUSAL BORING TERMINATED DUE TO HAND AUGER REFUSAL ON ROCK

NOTE: SPT BORING PERFORMED UTILIZING AN AUTOMATIC HAMMER.

	SAFETY HAMMER	AUTOMATIC HAMMER
GRANULAR MATERIALS-RELATIVE DENSITY	SPT N-VALUE (BLOWS/FT.)	SPT N-VALUE (BLOWS/FT.)
VERY LOOSE	LESS THAN 4	LESS THAN 3
LOOSE	4 to 10	3 to 8
MEDIUM DENSE	10 to 30	8 to 24
DENSE	30 to 50	24 to 40
VERY DENSE	GREATER THAN 50	GREATER THAN 40
SILTS AND CLAYS CONSISTENCY	SPT N-VALUE (BLOWS/FT.)	SPT N-VALUE (BLOWS/FT.)
VERY SOFT	LESS THAN 2	LESS THAN 1
SOFT	2 to 4	1 to 3
FIRM	4 to 8	3 to 6
STIFF	8 to 15	6 to 12
VERY STIFF	15 to 30	12 to 24
HARD	GREATER THAN 30	GREATER THAN 24

DRAWN BY: SW
CHECKED BY: JMN
APPROVED BY: KHS
DATE: MAY 2020
ENGINEER OF RECORD: KEVIN H. SCOTT, P.E.
FLORIDA LICENSE NO.: 65514

TIERRA
7351 Temple Terrace Highway
Tampa, Florida 33637
Phone: 813-989-1354 Fax: 813-989-1355
FL Cert. No.: 6486

SCALE: NOTED
PROJECT NUMBER: 6511-14-175-004

GEOTECHNICAL ENGINEERING SERVICES
BARNACLE HISTORIC STATE PARK
MIAMI-DADE COUNTY, FLORIDA

SHEET 2

NOTE:
ELEVATIONS SHOWN HEREON ARE BASED ON NAVD '88 DATUM.
TO CONVERT TO NGVD '29 ADD 1.549' TO THE NAVD VALUE.

NOTE: THE SCALE OF THESE DRAWINGS HAVE CHANGED DUE TO REPRODUCTION.

Sunshine811

SYMBOL	REVISION	DATE

SYMBOL	REVISION	DATE
A		
B		

SYMBOL	REVISION	DATE
C		
D		

Department of Environmental Protection
Division of Recreation and Parks
Bureau of Design and Construction
3800 Commonwealth Blvd., Tallahassee, FL 32399 (850) 245-2157

ISSUE DATE: FEBRUARY 2021
COMP. FILE No.:
STATE PROJECT No.: 61271C

DESIGNER: JRB
DRAWN BY: CAB
REVIEWED BY: CBL
CONSULTANT:

WGI
2035 Vista Parkway
West Palm Beach, FL 33411
Phone No. 561.687.2220
Fax No. 561.687.1110
Registry No. 33574

WGI PROJECT NO. 2412.12

INFORMATION ONLY

PROJECT TITLE: THE BARNACLE STATE PARK
SHEET TITLE: SOIL BORING (2)
PAVILION REPLACEMENT

SHEET NO. G105

Craig Burkhardt p:\structures\2020-jobs\2412.12 fdep barnacle house pavilion\07 structural dwgs\cadd 2412.12\G105_JM-DD-YY_61271C_F.dwg adobe pdf 24x36 Plotted: 3/31/2022 5:05:37 PM Saved: 10/27/2021 2:10:48 PM

1 G106 **OVERALL AERIAL AND PROJECT LOCATION**

20 10 0 20
GRAPHIC SCALE IN FEET

NOTE: THE SCALE OF THESE DRAWINGS HAVE CHANGED DUE TO REPRODUCTION.

Sunshine811

NOTE:
ELEVATIONS SHOWN HEREON ARE BASED ON NAVD '88 DATUM.
TO CONVERT TO NGVD '29 ADD 1.549' TO THE NAVD VALUE.

SYMBOL	REVISION	DATE
A		
B		

SYMBOL	REVISION	DATE
C		
D		

ISSUE DATE: FEBRUARY 2021
COMP. FILE No.:
STATE PROJECT No.: 61271C

DESIGNER : JRB
DRAWN BY: CAB
REVIEWED BY: CBL
CONSULTANT :

WGI.
2035 Vista Parkway
West Palm Beach, FL 33411
Phone No. 561.687.1220
Fax No. 561.687.1110
Registry No. 33574
WGI PROJECT NO. 2412.12

Department of Environmental Protection
Division of Recreation and Parks
Bureau of Design and Construction
3800 Commonwealth Blvd., Tallahassee, FL 32399 (850) 245-2157

PROFESSIONAL REGISTRATION
JEFFREY A. BERGMANN, PE
No. 58353
STATE OF FLORIDA
PROFESSIONAL ENGINEER
5/9/22

THE BARNACLE STATE PARK

SHEET TITLE
OVERALL AERIAL AND PROJECT LOCATION

PROJECT TITLE
PAVILION REPLACEMENT

SHEET NO.
G106

Craig Burkhardt p:\structures\2020-jobs\2412.12 fdep barnacle house pavilion\07 structural dwgs\cadd 2412.12\G106_MM-DD-YY_61271C_F.dwg adobe pdf 24x36 Plotted: 3/31/2022 5:05:49 PM Saved: 10/27/2021 2:10:22 PM

NOTE:
ELEVATIONS SHOWN HEREON ARE BASED ON NAVD '88 DATUM.
TO CONVERT TO NGVD '29 ADD 1.549' TO THE NAVD VALUE.

1 G107 **EROSION CONTROL PLAN**

6 3 0 0 6
GRAPHIC SCALE IN FEET

NOTE: THE SCALE OF THESE DRAWINGS HAVE CHANGED DUE TO REPRODUCTION.

Sunshine811

SYMBOL	REVISION	DATE
A		
B		

SYMBOL	REVISION	DATE
C		
D		

ISSUE DATE: FEBRUARY 2021
COMP. FILE No.:
STATE PROJECT No.: 61271C

DESIGNER : JRB
DRAWN BY: CAB
REVIEWED BY: CBL
CONTINUITY:

WGI
2035 Vista Parkway,
West Palm Beach, FL 33411
Phone No. 561.687.2220
Fax No. 561.687.1110
Registry No. 3374

WGI PROJECT NO. 2412.12

Department of Environmental Protection
Division of Recreation and Parks
Bureau of Design and Construction
3800 Commonwealth Blvd., Tallahassee, FL 32399 (850) 245-2157

PROFESSIONAL ENGINEER REGISTRATION
JEFFREY R. BURKHARDT
STATE OF FLORIDA
No. 61271
3/31/22

THE BARNACLE STATE PARK

SHEET TITLE: EROSION CONTROL PLAN

PROJECT TITLE: PAVILION REPLACEMENT

SHEET NO. G107

Craig Burkhardt p:\structures\2020-jobs\2412.12 fdep barnacle house pavilion\07 structural dwgs\cadd 2412.12\G107_WM-DD-YY_61271C_F.dwg adobe pdf 24x36 Plotted: 3/31/2022 5:05:57 PM Saved: 10/27/2021 2:10:38 PM

EROSION CONTROL NOTES

1. SEDIMENT BASINS AND TRAPS, PERIMETER DIKES, SEDIMENT BARRIERS AND OTHER MEASURES INTENDED TO TRAP SEDIMENT SHALL BE CONSTRUCTED AS A FIRST STEP IN ANY LAND DISTURBING ACTIVITY AND SHALL BE MADE FUNCTIONAL BEFORE UP-SLOPE LAND DISTURBANCE TAKES PLACE.

2. ALL SEDIMENT CONTROL MEASURES ARE TO BE ADJUSTED TO MEET FIELD CONDITIONS AT THE TIME OF CONSTRUCTION AND BE CONSTRUCTED PRIOR TO ANY GRADING OR DISTURBANCE OF EXISTING SURFACE MATERIAL ON BALANCE OF SITE. PERIMETER SEDIMENT BARRIERS SHALL BE CONSTRUCTED TO PREVENT SEDIMENT OR TRASH FROM FLOWING OR FLOATING ON TO ADJACENT PROPERTIES.

3. PERMANENT OR TEMPORARY SOIL STABILIZATION SHALL BE APPLIED TO DENUDED AREAS WITHIN SEVEN DAYS AFTER FINAL GRADE IS REACHED ON ANY PORTION OF THE SITE. TEMPORARY SOIL STABILIZATION SHALL BE APPLIED WITHIN SEVEN DAYS TO DENUDED AREAS THAT MAY NOT BE AT FINAL GRADE BUT WILL REMAIN UNDISTURBED FOR LONGER THAN 30 DAYS. PERMANENT STABILIZATION SHALL BE APPLIED TO AREAS THAT ARE TO BE LEFT UNDISTURBED FOR MORE THAN ONE YEAR.

4. DURING CONSTRUCTION OF THE PROJECT, SOIL STOCK PILES SHALL BE STABILIZED, COVERED OR CONTAINED WITH SEDIMENT TRAPPING MEASURES. THE APPLICANT IS RESPONSIBLE FOR THE TEMPORARY PROTECTION AND PERMANENT STABILIZATION OF ALL SOIL STOCKPILES ON SITE AS WELL AS SOIL INTENTIONALLY TRANSPORTED FROM THE PROJECT SITE.

5. A PERMANENT VEGETATIVE COVER SHALL BE ESTABLISHED ON DENUDED AREAS NOT OTHERWISE PERMANENTLY STABILIZED.

6. AFTER ANY SIGNIFICANT RAINFALL, SEDIMENT CONTROL STRUCTURES WILL BE INSPECTED FOR INTEGRITY. ANY DAMAGED DEVICES SHALL BE CORRECTED IMMEDIATELY.

7. CONCENTRATED RUNOFF SHALL NOT FLOW DOWN CUT OR FILL SLOPES UNLESS CONTAINED WITHIN AN ADEQUATE TEMPORARY OR PERMANENT CHANNEL, FLUME, SLOPE DRAIN STRUCTURE OR APPROVED CONTROL.

8. SEDIMENT WILL BE PREVENTED FROM ENTERING ANY STORM WATER SYSTEM, DITCH OR CHANNEL. ALL STORM WATER INLETS THAT ARE MADE OPERABLE DURING CONSTRUCTION SHALL BE PROTECTED SO THAT SEDIMENT-LADEN WATER CANNOT ENTER THE CONVEYANCE SYSTEM WITHOUT FIRST BEING FILTERED OR OTHERWISE TREATED TO REMOVE SEDIMENT.

9. WHEN WORK IN A LIVE WATERCOURSE IS PERFORMED, PRECAUTIONS SHALL BE TAKEN TO MINIMIZE ENCROACHMENT, CONTROL SEDIMENT TRANSPORT AND STABILIZE THE WORK AREA TO THE GREATEST EXTENT POSSIBLE DURING CONSTRUCTION.

10. PERIODIC INSPECTION AND MAINTENANCE OF ALL SEDIMENT CONTROL STRUCTURES MUST BE PROVIDED TO ENSURE INTENDED PURPOSE IS ACCOMPLISHED. THE DEVELOPER, OWNER AND/OR CONTRACTOR SHALL BE CONTINUALLY RESPONSIBLE FOR ALL SEDIMENT CONTROLS. SEDIMENT CONTROL MEASURES SHALL BE IN WORKING CONDITION AT THE END OF EACH WORKING DAY.

11. WHERE CONSTRUCTION VEHICLE ACCESS ROUTES INTERSECT PAVED PUBLIC ROADS, PROVISIONS SHALL BE MADE TO MINIMIZE THE TRANSPORT OF SEDIMENT BY TRACKING ONTO THE PAVED SURFACE. WHERE SEDIMENT IS TRANSPORTED ONTO A PUBLIC ROAD SURFACE WITH CURBS AND GUTTERS, THE ROAD SHALL BE CLEANED THOROUGHLY AT THE END OF EACH DAY. SEDIMENT SHALL BE REMOVED FROM THE ROADS BY SHOVELING OR SWEEPING AND TRANSPORTED TO A SEDIMENT CONTROL DISPOSAL AREA. STREET WASHING SHALL BE ALLOWED ONLY AFTER SEDIMENT IS REMOVED IN THIS MANNER. THIS PROVISION SHALL APPLY TO INDIVIDUAL SUBDIVISION LOTS AS WELL AS TO LARGER LAND DISTURBING ACTIVITIES.

12. ALL TEMPORARY EROSION AND SEDIMENT CONTROL MEASURES SHALL BE REMOVED WITHIN 30 DAYS AFTER FINAL SITE STABILIZATION OR AFTER THE TEMPORARY MEASURES ARE NO LONGER NEEDED.

13. PROPERTIES AND WATERWAYS DOWNSTREAM FROM CONSTRUCTION SITES SHALL BE PROTECTED FROM SEDIMENT DEPOSITION AND EROSION AT ALL TIMES DURING CONSTRUCTION.

14. EROSION CONTROL DESIGN AND CONSTRUCTION SHALL FOLLOW THE REQUIREMENTS IN INDEX NUMBERS 101, 102 AND 103 OF FDOT ROADWAY AND TRAFFIC DESIGN STANDARDS AND COUNTY PERMITS.

15. CONTRACTOR IS RESPONSIBLE FOR ALL SURFACE WATER DISCHARGES, RAINFALL RUN OFF OR DE-WATERING ACTIVITIES.

16. CONTRACTOR MUST INCORPORATE ALL BMP'S NECESSARY TO MEET OR EXCEED STATE WATER QUALITY AND SWPPP REQUIREMENTS.

17. THE POLLUTION PREVENTION PLAN IS A MINIMUM GUIDELINE ONLY. ADDITIONAL BMP'S MAY BE NECESSARY AT CONTRACTOR'S EXPENSE.

18. NOI TO BE POSTED ON SITE.

19. DE-WATERING ACTIVITIES:
    IF DE-WATERING IS REQUIRED CONTRACTOR SHALL BE RESPONSIBLE FOR OBTAINING THE NECESSARY STATE AND COUNTY DE-WATERING PERMITS. THE DE-WATERING PLAN SHALL ADDRESS DE-WATERING HOLDING AREAS AND WATER QUALITY TREATMENT.
    A – DISCHARGE MUST NOT EXCEED STATE WATER QUALITY STANDARDS.
    B – CONTRACTOR MUST HAVE A TRANSFERABLE SFWMD CONSUMPTIVE USE PERMIT KNOWN AS A "NOTICED GENERAL PERMIT FOR SHORT TERM CONSTRUCTION DE-WATERING".
    C – NO HYDRAULIC PUMPS MAY BE USED FOR DE-WATERING UNLESS APPROVED BY THE WATER MANAGEMENT DISTRICT FOR THAT AREA.
    D – NO TURBID DISCHARGE. TURBIDITY READINGS ARE REQUIRED ONCE A WEEK AND MUST BE REPORTED TO THE PROJECT ENGINEER.

NOTE:
ALL STOCKPILES SHALL BE A MAXIMUM OF 25' HIGH.

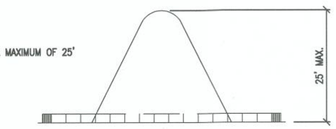

SECTION A–A

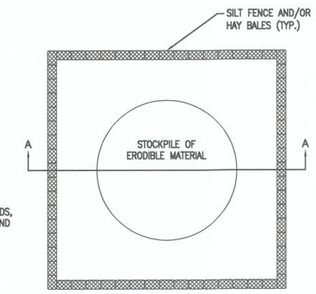

NOTE:
FOR STOCKPILING ERODIBLE MATERIAL FOR EXTENDED PERIODS, THE AREA SHALL BE SEEDED AND MULCHED.

SEDIMENT CONTROL DETAIL FOR STOCKPILING OF ERODIBLE MATERIAL–N.T.S.

TYPE 2. DOT FOR HIGHER CURRENT WATERS (UP TO FIVE FEET PER SECOND): DEEPER LAKES, STREAMS, INTERCOASTAL AND TIDAL AREAS. INCLUDES AN ENCAPSULATED STEEL LOAD CABLE ALONG TOP OF BARRIER AND 8"x8"x4' FLOTATION LOGS. WEAR STRESS POINTS ARE REINFORCED WITH SHIELDS.

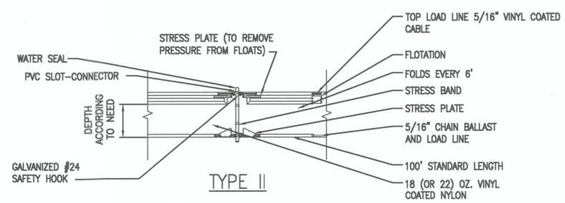

TYPE II

BLOW–UP OF SHACKLE CONNECTION

ORIENTATION WHEN INSTALLED (TIDAL SITUATION–TYPE III)–N.T.S.

NOTES:
1. SILT FENCE SHALL BE PLACED ON SLOPE CONTOURS TO MAXIMIZE PONDING EFFICIENCY.
2. INSPECT AND REPAIR FENCE AFTER EACH STORM EVENT AND REMOVE SEDIMENT WHEN NECESSARY. 9" MAXIMUM RECOMMENDED STORAGE HEIGHT.
3. REMOVED SEDIMENT SHALL BE DEPOSITED TO AN AREA THAT WILL NOT CONTRIBUTE SEDIMENT OFF–SITE AND CAN BE PERMANENTLY STABILIZED.

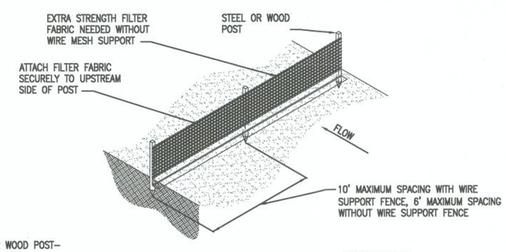

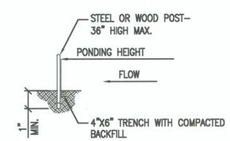

TRENCH DETAIL

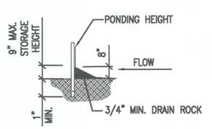

INSTALLATION WITHOUT TRENCHING

TYPE IV SILT FENCE–N.T.S.

NOTE:
ELEVATIONS SHOWN HEREON ARE BASED ON NAVD '88 DATUM. TO CONVERT TO NGVD '29 ADD 1.549' TO THE NAVD VALUE.

NOTE: THE SCALE OF THESE DRAWINGS HAVE CHANGED DUE TO REPRODUCTION.

Sunshine811

SYMBOL	REVISION	DATE
C		
D		

SYMBOL	REVISION	DATE
A		
B		

ISSUE DATE: FEBRUARY 2021
COMP. FILE No.:
STATE PROJECT No.: 61271C

DESIGNER : JRB
DRAWN BY: CAB
REVIEWED BY: CBL
CONSULTANT :

WGI
2035 Vista Parkway
West Palm Beach, FL 33411
Phone No. 561.687.2220
Fax No. 561.687.1110
Registry No. 33574

WGI PROJECT NO. 2412.12

Department of Environmental Protection
Division of Recreation and Parks
Bureau of Design and Construction
3800 Commonwealth Blvd., Tallahassee, FL 32399 (850) 245-2157

PROFESSIONAL REGISTRATION
JEFFREY A. BERDMAN, PE
No. 75755
STATE OF FLORIDA
PROFESSIONAL ENGINEER

THE BARNACLE STATE PARK
PROJECT TITLE

EROSION CONTROL DETAILS
SHEET TITLE

PAVILION REPLACEMENT

SHEET NO.
G108

Craig Burkhardt jb:\structures\2020-jobs\2412.12 fdep barnacle house pavilion\07 structural dwgs\cadd 2412.12\G108_MM-DD-YY_61271C_F.dwg adobe pdf 24x36 Plotted: 3/31/2022 5:06:04 PM Saved: 10/27/2021 2:10:06 PM

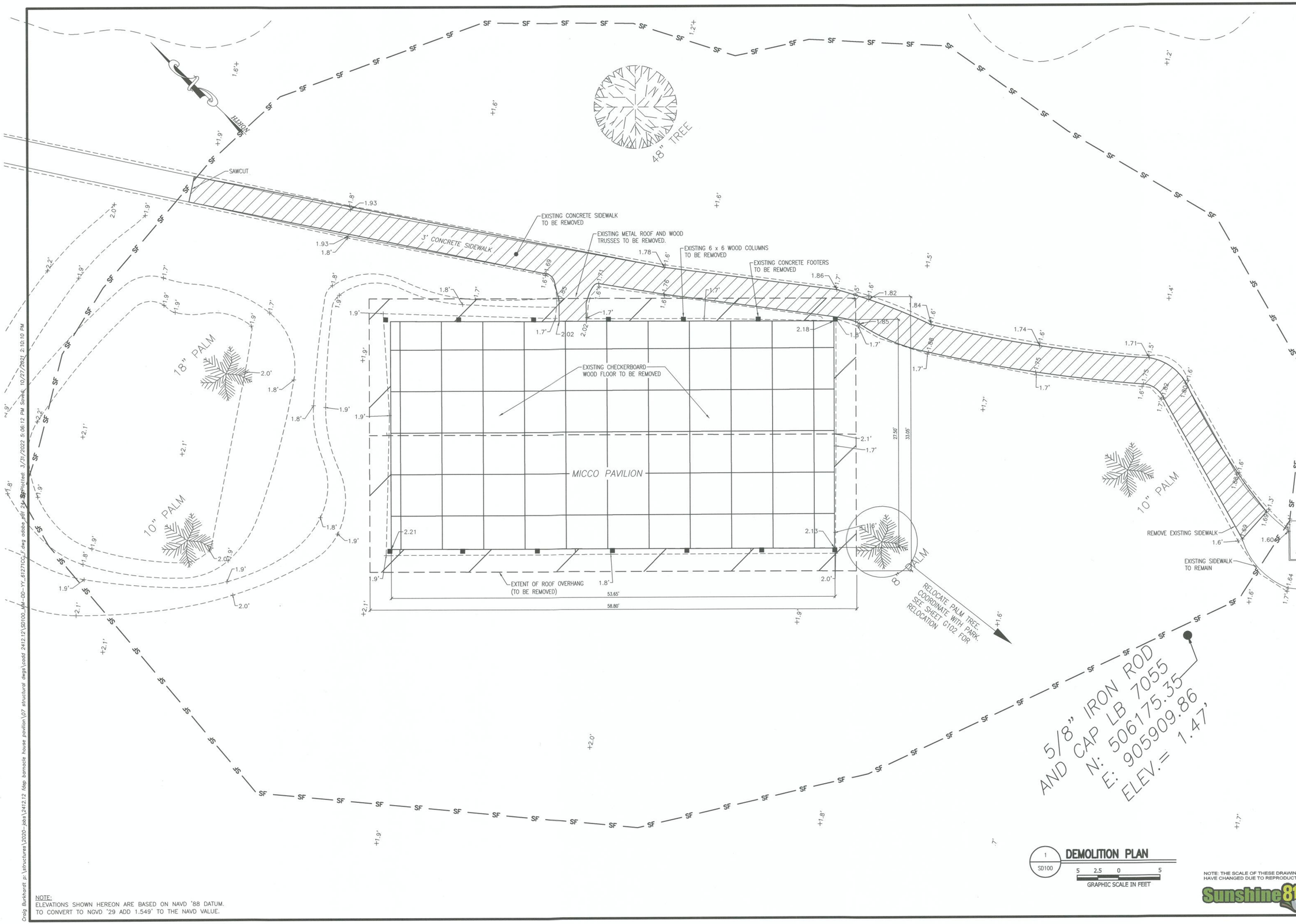

1 SD100 **DEMOLITION PLAN**

5 2.5 0 5
GRAPHIC SCALE IN FEET

NOTE: THE SCALE OF THESE DRAWINGS HAVE CHANGED DUE TO REPRODUCTION.

Sunshine811

NOTE:
ELEVATIONS SHOWN HEREON ARE BASED ON NAVD '88 DATUM.
TO CONVERT TO NGVD '29 ADD 1.549' TO THE NAVD VALUE.

Craig Burkhardt p:\structures\2020-jobs\2412.12 fdep barnacle house pavilion\07 structural dwgs\cadd 2412.12\SD100.dwg adobe.pdf 24 x 36 Plotted: 3/31/2022 5:06:12 PM Sunday, 10/27/2021 2:10:10 PM

SYMBOL	REVISION	DATE
C		
D		

SYMBOL	REVISION	DATE
A		
B		

ISSUE DATE: FEBRUARY 2021
COMP. FILE No.:
STATE PROJECT No.: 61271C

Department of Environmental Protection
Division of Recreation and Parks
Bureau of Design and Construction
3800 Commonwealth Blvd., Tallahassee, FL 32399 (850) 245-2157

2035 Vista Parkway
West Palm Beach, FL 33411
Phone No. 561.687.2220
Fax No. 561.687.1110
Registry No. 3314

WGI

WGI PROJECT NO. 2412.12

DESIGNER : JRB
DRAWN BY: CAB
REVIEWED BY: CBL
CONSULTANT :

PROFESSIONAL CERTIFICATION
REPRESENTING THE ENGINEER
STATE OF FLORIDA PROFESSIONAL ENGINEER

THE BARNACLE STATE PARK

SHEET TITLE: DEMOLITION PLAN

PROJECT TITLE: PAVILION REPLACEMENT

SHEET NO. SD100

PHOTO SD101-1
EXISTING PAVILION TO BE REMOVED INCLUDING:
METAL ROOF, ROOF TRUSSES, WOOD COLUMNS, CHECKERBOARD FLOOR, AND ELECTRICAL

PHOTO SD101-3
EXISTING PAVILION TO BE REMOVED INCLUDING:
METAL ROOF, ROOF TRUSSES, WOOD COLUMNS, CHECKERBOARD FLOOR, AND ELECTRICAL

NOTE:
ELEVATIONS SHOWN HEREON ARE BASED ON NAVD '88 DATUM.
TO CONVERT TO NGVD '29 ADD 1.549' TO THE NAVD VALUE.

PHOTO SD101-2
EXISTING PAVILION POSTS AND FOOTING

PHOTO SD101-4
EXISTING SIDEWALK

LE OF THESE DRAWINGS
DUE TO REPRODUCTION.

Sunshine811

SYMBOL	REVISION	DATE
A		
B		

SYMBOL	REVISION	DATE
C		
D		

ISSUE DATE: FEBRUARY 2021
COMP. FILE No.:
STATE PROJECT No.: 61271C

DESIGNER : JRB
DRAWN BY: CAB
REVIEWED BY: CBL
CONSULTANT :

WGI
2035 Vista Parkway
West Palm Beach, FL 33411
Phone No. 561.687.2220
Fax No. 561.687.1110
Registry No. 33574

WGI PROJECT NO. 2412.12

Department of Environmental Protection
Division of Recreation and Parks
Bureau of Design and Construction
3800 Commonwealth Blvd., Tallahassee, FL 32399 (850) 245-2157

PROFESSIONAL REGISTRATION
JAFFER H. HERMANN, PE
No. 60159
STATE OF FLORIDA
PROFESSIONAL ENGINEER
Sep 22

PROJECT TITLE
THE BARNACLE STATE PARK

SHEET TITLE
DEMOLITION PHOTOS

PAVILION
REPLACEMENT

SHEET NO.
SD101

Craig Burkhardt p:\structures\2020-jobs\2412.12 (dep barnacle house pavilion)\07 structural dwgs\cadd 2412.12\SD101_MM-DD-YY_61271C_F.dwg adobe pdf 24x36 Plotted: 3/31/2022 5:06:25 PM Saved: 10/27/2021 2:10:59 PM

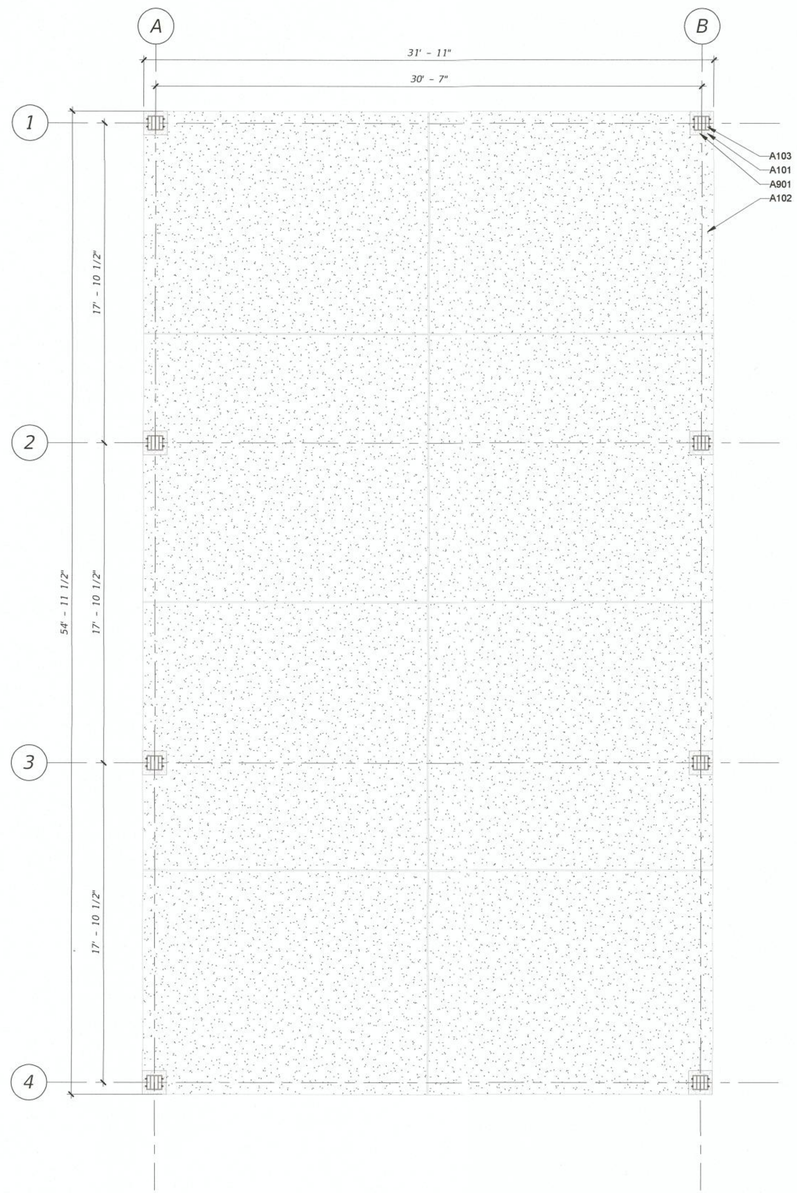

1 FLOOR PLAN

0' 2' 4' 8'

KEYNOTE LEGEND

NO.	DESCRIPTION
A101	16" X 16" CMU BASE
A102	NEW CONCRETE SLAB, REFER TO STRUCTURAL DRAWINGS
A103	(4) 3" x 10" PRESSURE TREATED WOOD COLUMN, REFER TO STRUCTURAL DRAWINGS
A901	7/8" STUCCO SYSTEM ON GALVANIZED META LATH

NOTE: THE SCALE OF THESE DRAWINGS HAVE CHANGED DUE TO REPRODUCTION

Sunshine811

SYMBOL	REVISION	DATE	SYMBOL	REVISION	DATE
A			C		
B			D		

ISSUE DATE: OCTOBER 2021

COMP. FILE No.:

STATE PROJECT No.: 61271C

Department of Environmental Protection
Division of Recreation and Parks
Bureau of Design and Construction
3800 Commonwealth Blvd., Tallahassee, FL 32399 (850) 245-2157

3111 W. Dr. Martin Luther King Jr. Blvd., Suite 375, Tampa, FL 33607
Phone No. 813.574.3190
www.wgi-inc.com
Registry No. 33574

WGI PROJECT NO. 2412.12

DESIGNER: EL

DRAWN BY: CP

REVIEWED BY:

Consultant:

PROFESSIONAL REGISTRATION

ERIC LUTTMANN, AIA
ARCHITECT
VAN WYE & ASSOCIATES, ARCHITECTS, INC.
1111 N. WESTSHORE BLVD., SUITE 205
TAMPA, FLORIDA 33607
(813) 289-1994
LICENSE NO. AR9711

STATE OF FLORIDA
ERIC LUTTMANN
AR9711
REGISTERED ARCHITECT

SHEET TITLE: THE BARNACLE STATE PARK

PROJECT TITLE: **FIRST FLOOR PLAN**

PAVILION REPLACEMENT

SHEET NO. AA101

NOTE:
ALL 3-DIMENSIONAL IMAGES ARE FOR ILLUSTRATIVE PURPOSES ONLY. THEY ARE NOT TO BE USED FOR THE CONSTRUCTION AND DETAILING OF THE PROJECT.

NOTE: THE SCALE OF THESE DRAWINGS HAVE CHANGED DUE TO REPRODUCTION.

Sunshine 811

DESIGNER:	EL	ISSUE DATE:	OCTOBER 2021	SYMBOL	REVISION	DATE	SYMBOL	REVISION	DATE
DRAWN BY:	CP	COMP. FILE No.:		A			C		
REVIEWED BY:		STATE PROJECT No.:	61271C	B			D		
Consultant:	WGI®								

WGI PROJECT NO. 2412.12

3111 W. Dr. Martin Luther King Jr. Blvd., Suite 375, Tampa, FL 33607
Phone No. 813.574.3190
www.wgi-inc.com
Registry No. 33574

PROFESSIONAL REGISTRATION

ERIC LUTTMANN, AIA
ARB/111
STATE OF FLORIDA
REGISTERED ARCHITECT
No. 12345

Department of Environmental Protection
Division of Recreation and Parks
Bureau of Design and Construction
3800 Commonwealth Blvd., Tallahassee, FL 32399 (850) 245-2157

SHEET TITLE: THE BARNACLE STATE PARK

PROJECT TITLE: **PERSPECTIVE**

PAVILION REPLACEMENT

SHEET NO. AA201

1 / S100 **STRUCTURAL SITE PLAN**

20 10 0 20
GRAPHIC SCALE IN FEET

NOTE: THE SCALE OF THESE DRAWINGS HAVE CHANGED DUE TO REPRODUCTION.

Sunshine811

NOTE:
ELEVATIONS SHOWN HEREON ARE BASED ON NAVD '88 DATUM.
TO CONVERT TO NGVD '29 ADD 1.549' TO THE NAVD VALUE.

SYMBOL	REVISION	DATE
A		
B		

SYMBOL	REVISION	DATE
C		
D		

ISSUE DATE: FEBRUARY 2021
COMP. FILE No.:
STATE PROJECT No.: 61271C

DESIGNER : JRB
DRAWN BY: CAB
REVIEWED BY: CBL
CONSULTANT :

WGI
2035 Vista Parkway
West Palm Beach, FL 33411
Phone No. 561.687.7220
Fax No. 561.687.9110
Registry No. 33574

WGI PROJECT NO. 2412.12

Department of Environmental Protection
Division of Recreation and Parks
Bureau of Design and Construction
3800 Commonwealth Blvd., Tallahassee, FL 32399 (850) 245-2157

PROFESSIONAL REGISTRATION
JEFFREY A. BERGMANN
No. 80159
STATE OF FLORIDA
PROFESSIONAL ENGINEER
3/31/22

THE BARNACLE STATE PARK

SHEET TITLE
STRUCTURAL SITE PLAN

PROJECT TITLE
PAVILION
REPLACEMENT

SHEET NO.
S100

Craig Burkhardt p:\structures\2020-jobs\2412.12 fdep barnacle house pavilion\07 structural dwgs\cadd 2412.12\S100_MM-DD-YY_61271C_F.dwg adobe pdf 24x36 Plotted: 3/31/2022 5:06:56 PM Saved: 10/27/2021 2:10:36 PM

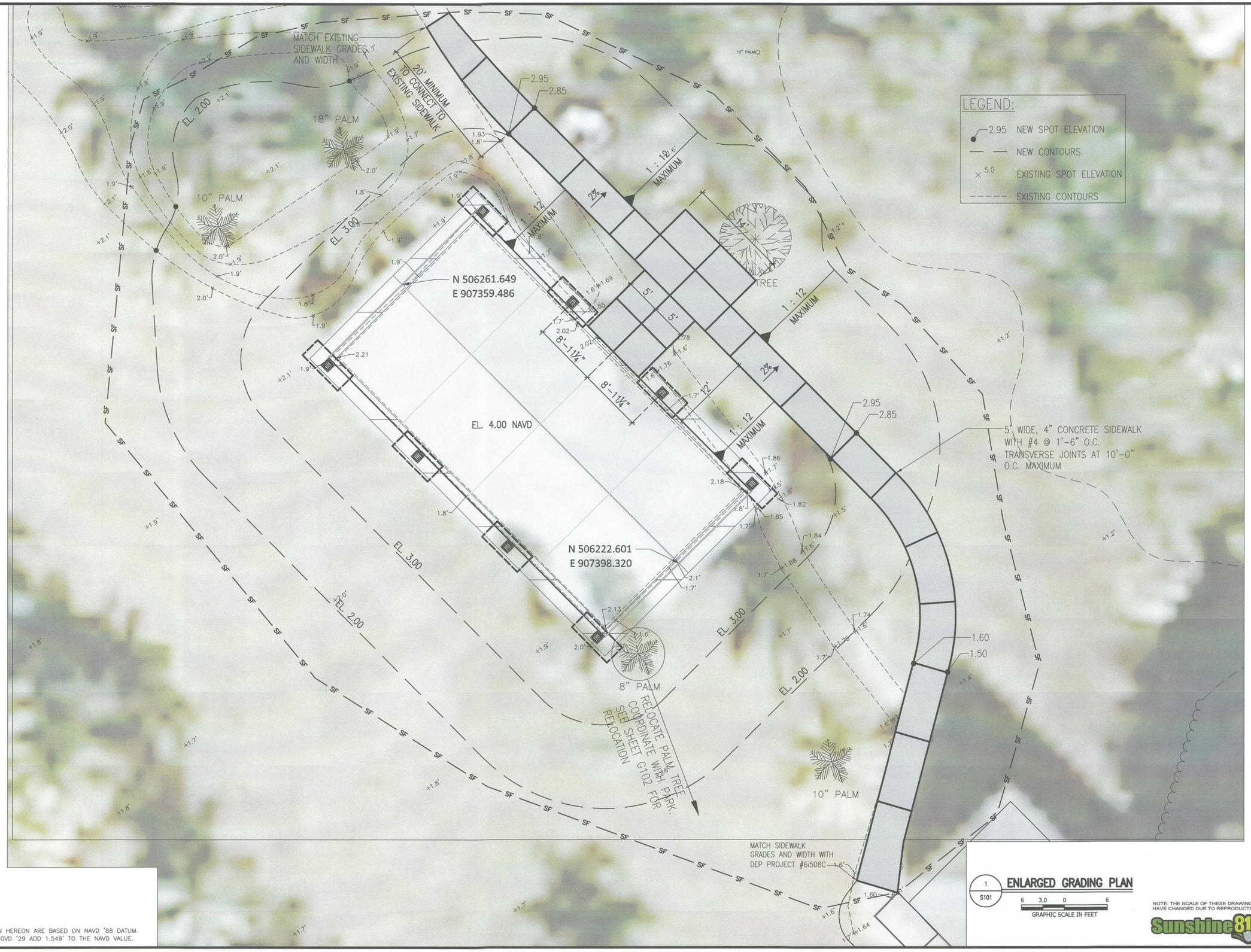

NOTE:
ELEVATIONS SHOWN HEREON ARE BASED ON NAVD '88 DATUM. TO CONVERT TO NGVD '29 ADD 1.549' TO THE NAVD VALUE.

1 / S101 **ENLARGED GRADING PLAN**

6 3.0 0 6
GRAPHIC SCALE IN FEET

NOTE: THE SCALE OF THESE DRAWINGS HAVE CHANGED DUE TO REPRODUCTION.

Sunshine811

DESIGNER : JRB	ISSUE DATE: FEBRUARY 2021	SYMBOL	REVISION	DATE	SYMBOL	REVISION	DATE
DRAWN BY: CAB	COMP. FILE No.:	A			C		
REVIEWED BY: CBL	STATE PROJECT No.: 61271C	B			D		

CONSULTANT:
WGI
2035 Vista Parkway
West Palm Beach, FL 33411
Phone No. 561.687.2220
Fax No. 561.687.1110
Registry No. 33574

PROFESSIONAL REGISTRATION
JEFFREY M. BERGMAN, PE
No. 61159
STATE OF FLORIDA
PROFESSIONAL ENGINEER

Department of Environmental Protection
Division of Recreation and Parks
Bureau of Design and Construction
3800 Commonwealth Blvd., Tallahassee, FL 32399 (850) 245-2157

WGI PROJECT NO. 2412.12

THE BARNACLE STATE PARK

SHEET TITLE: ENLARGED GRADING PLAN

PROJECT TITLE: PAVILION REPLACEMENT

SHEET NO. S101

Craig Burkhardt p:\structures\2020-jobs\2412.12 fdep barnacle house pavilion\07 structural dwgs\cadd 2412.12\S100_MM-DD-YY_61271C_F.dwg adobe pdf 24x36 Plotted: 3/31/2022 5:07:04 PM Saved: 10/27/2021 2:10:36 PM

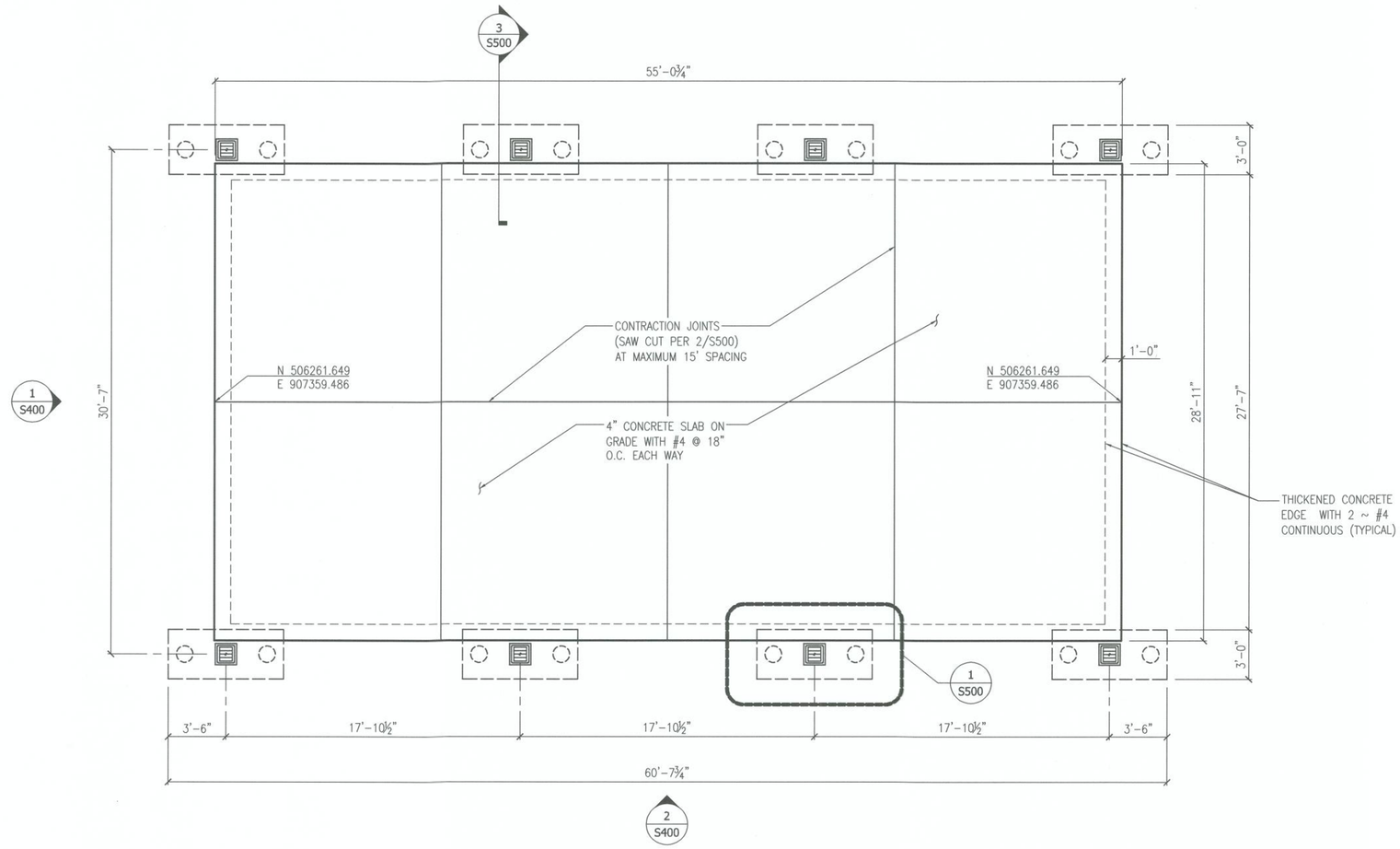

1 S200 **FOUNDATION PLAN**

4 2 0 4
GRAPHIC SCALE IN FEET

NOTE: THE SCALE OF THESE DRAWINGS HAVE CHANGED DUE TO REPRODUCTION.

Sunshine811

NOTE:
ELEVATIONS SHOWN HEREON ARE BASED ON NAVD '88 DATUM.
TO CONVERT TO NGVD '29 ADD 1.549' TO THE NAVD VALUE.

SYMBOL	REVISION	DATE
A		
B		

SYMBOL	REVISION	DATE
C		
D		

Department of Environmental Protection
Division of Recreation and Parks
Bureau of Design and Construction
3800 Commonwealth Blvd., Tallahassee, FL 32399 (850) 245-2157

ISSUE DATE: FEBRUARY 2021
COMP. FILE No.:
STATE PROJECT No.: 61271C

DESIGNER : JRB
DRAWN BY: CAB
REVIEWED BY: CBL
CONSULTANT :

WGI
2035 Vista Parkway
West Palm Beach, FL 33411
Phone No. 561.687.2220
Fax No. 561.687.1110
Registry No. 33574

WGI PROJECT NO. 2412.12

PROFESSIONAL REGISTRATION
JEFFREY R. BERGMAN, PE
No. 50755
STATE OF FLORIDA
PROFESSIONAL ENGINEER
5/24/22

THE BARNACLE STATE PARK

SHEET TITLE: FOUNDATION PLAN

PROJECT TITLE: PAVILION REPLACEMENT

SHEET NO. S200

Craig Burkhardt, p:\structures\2020-jobs\2412.12 fdep barnacle house pavilion\07 structural dwgs\cadd 2412.12\S200_MM-DD-YY_61271C_F.dwg adobe pdf 24x36 Plotted: 3/31/2022 5:07:10 PM Saved: 10/27/2021 2:11:01 PM

PLYWOOD SHEATHING NAILING SCHEDULE
(ROOF)

NAIL SIZE	NAIL SPACING	ZONE
8d RING SHANK (*)	4" @ EDGES, 6" @ INTERMEDIATE SUPPORTS	ROOF (3)
8d	6" @ EDGES, 6" @ INTERMEDIATE SUPPORTS	ROOF (1) (2)

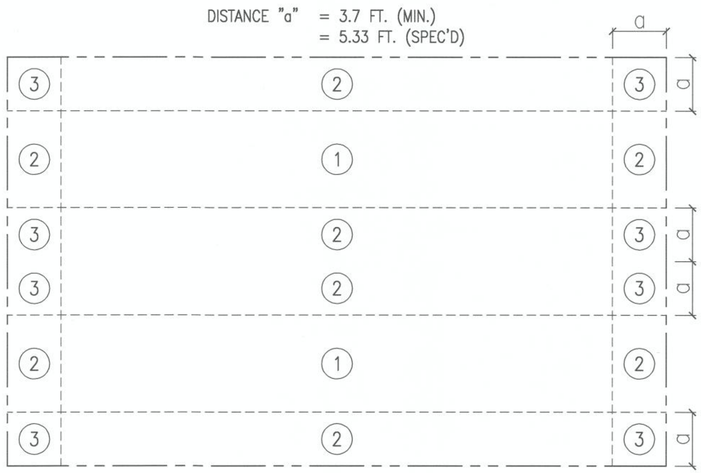

2 S300 **ROOF PLAN**

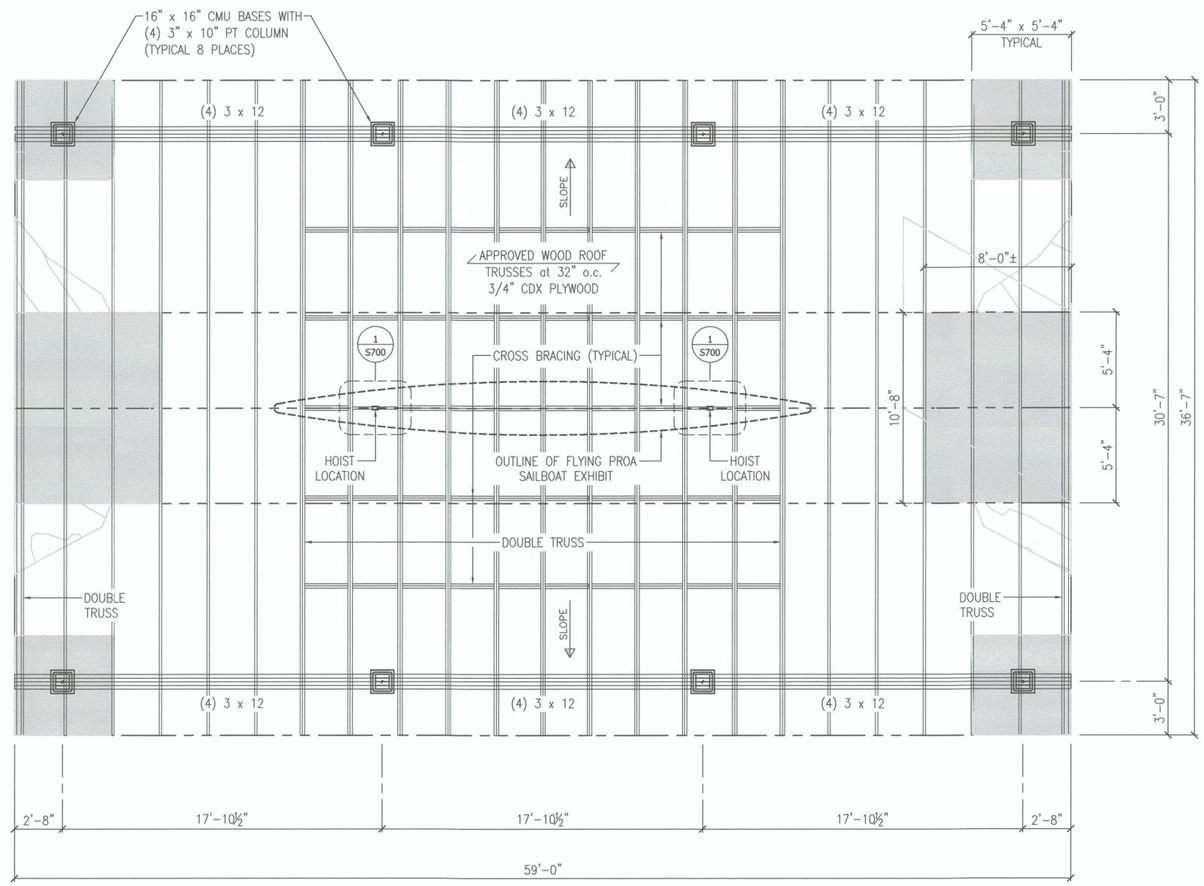

NOTE:

1. SHADED AREAS TO FOLLOW ZONE 3 NAILING SCHEDULE.
2. PLYWOOD BLOCKING AND BLOCKING OVER BEAMS NOT SHOWN FOR CLARITY.

1 S300 **ROOF FRAMING PLAN**

4 2 0 4
GRAPHIC SCALE IN FEET

NOTE:
ELEVATIONS SHOWN HEREON ARE BASED ON NAVD '88 DATUM.
TO CONVERT TO NGVD '29 ADD 1.549' TO THE NAVD VALUE.

NOTE: THE SCALE OF THESE DRAWINGS HAVE CHANGED DUE TO REPRODUCTION.

Sunshine811

SYMBOL	REVISION	DATE

SYMBOL	REVISION	DATE
A		
B		

ISSUE DATE: FEBRUARY 2021
COMP. FILE No.:
STATE PROJECT No.: 61271C

Department of Environmental Protection
Division of Recreation and Parks
Bureau of Design and Construction
3800 Commonwealth Blvd., Tallahassee, FL 32399 (850) 245-2157

2035 Vista Parkway
West Palm Beach, FL 33411
Phone No. 561.687.2220
Fax No. 561.687.1110
Registry No. 33574

WGI
WGI PROJECT NO. 2412.12

DESIGNER : JRB
DRAWN BY: CAB
REVIEWED BY: CBL
CONSULTANT :

PROFESSIONAL RESPONSIBILITY
JEFFREY R. BERMAN, P.E.
No. 70159
STATE OF FLORIDA
PROFESSIONAL ENGINEER

THE BARNACLE STATE PARK

SHEET TITLE: ROOF FRAMING PLAN

PROJECT TITLE: PAVILION REPLACEMENT

SHEET NO. S300

Craig Burkhardt p:\structures\2020-jobs\2412.12 fdep barnacle house pavilion\07 structural dwgs\cadd 2412.12\S300_MM-DD-YY_61271C_F.dwg adobe pdf 24x36 Plotted: 3/31/2022 5:07:14 PM Saved: 10/27/2021 2:10:44 PM

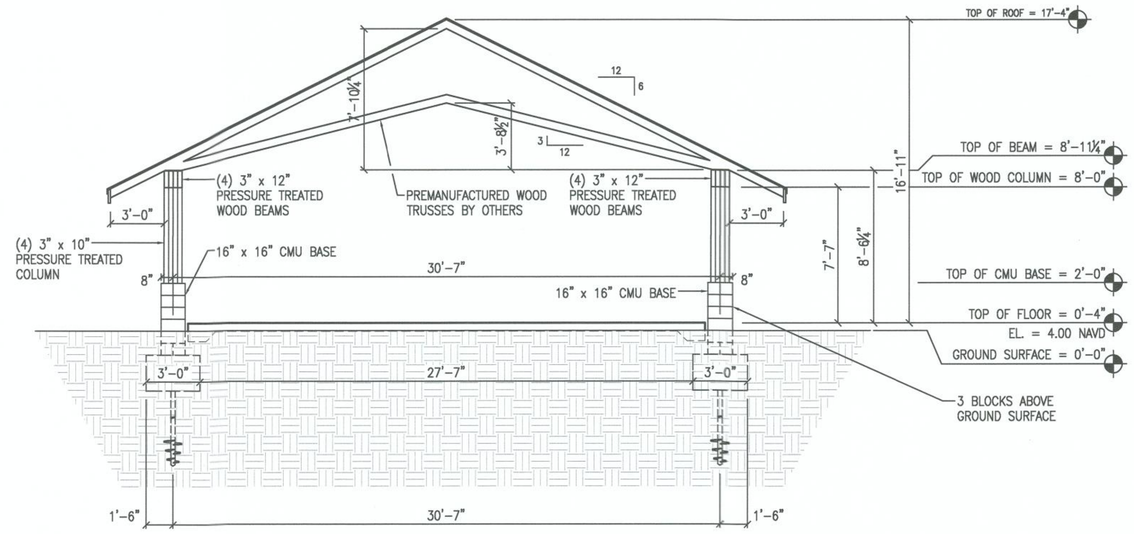

1 S400 **EAST ELEVATION**

4 2 0 4
GRAPHIC SCALE IN FEET

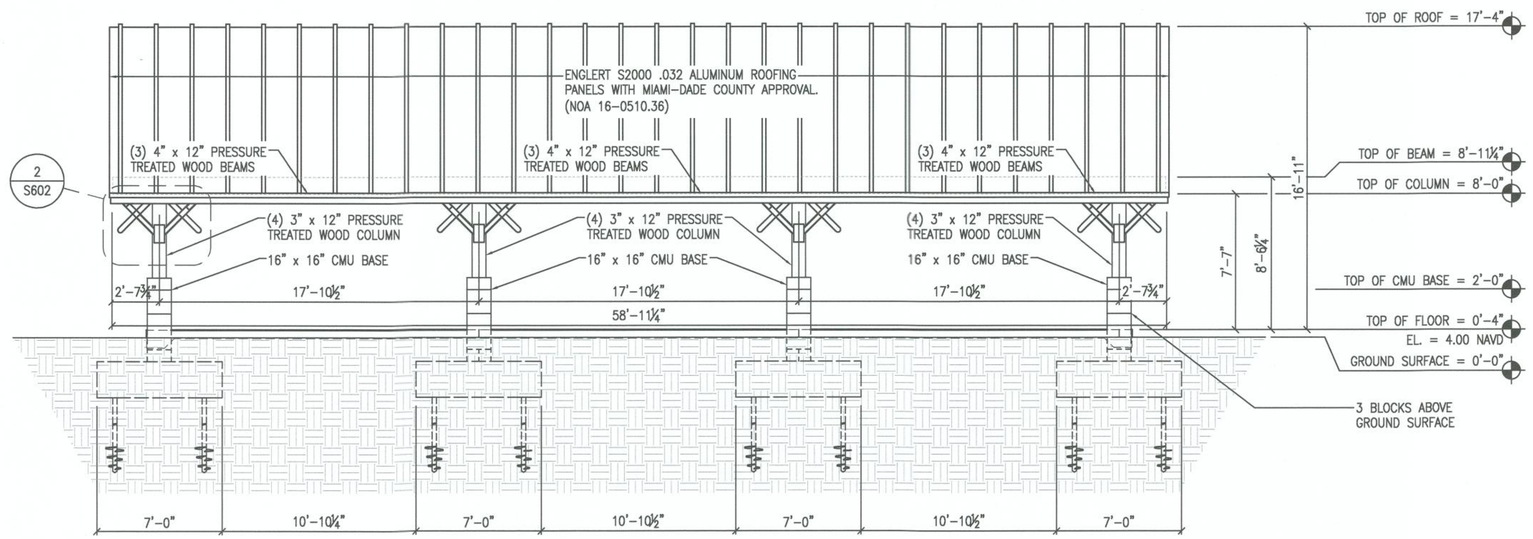

2 S400 **SOUTHWEST ELEVATION**

4 2 0 4
GRAPHIC SCALE IN FEET

NOTE: THE SCALE OF THESE DRAWINGS HAVE CHANGED DUE TO REPRODUCTION.

Sunshine811

SYMBOL	REVISION	DATE
C		
D		

SYMBOL	REVISION	DATE
A		
B		

ISSUE DATE: FEBRUARY 2021
COMP. FILE No.:
STATE PROJECT No.: 61271C

DESIGNER: JRB
DRAWN BY: CAB
REVIEWED BY: CBL
CONSULTANT:

WGI
2035 Vista Parkway
West Palm Beach, FL 33411
Phone No. 561.687.2220
Fax No. 561.687.1110
Registry No. 33574

WGI PROJECT NO. 2412.12

PROFESSIONAL REGISTRANT OF RECORD
JEFFREY A. BERGMANN, PE
LICENSE NO. 75922
STATE OF FLORIDA
PROFESSIONAL ENGINEER
3/31/22

Department of Environmental Protection
Division of Recreation and Parks
Bureau of Design and Construction
3800 Commonwealth Blvd., Tallahassee, FL 32399 (850) 245-2157

THE BARNACLE STATE PARK

SHEET TITLE: PAVILION ELEVATIONS

PROJECT TITLE: PAVILION REPLACEMENT

SHEET NO. S400

Craig Burkhardt p:\structures\2020-jobs\241212 fdep barnacle house pavilion\07 structural dwgs\cadd 241212\S400_MM-DD-YY-61271C_F.dwg adobe pdf 24x36 Plotted: 3/31/2022 5:07:19 PM Saved: 10/27/2021 2:10:32 PM

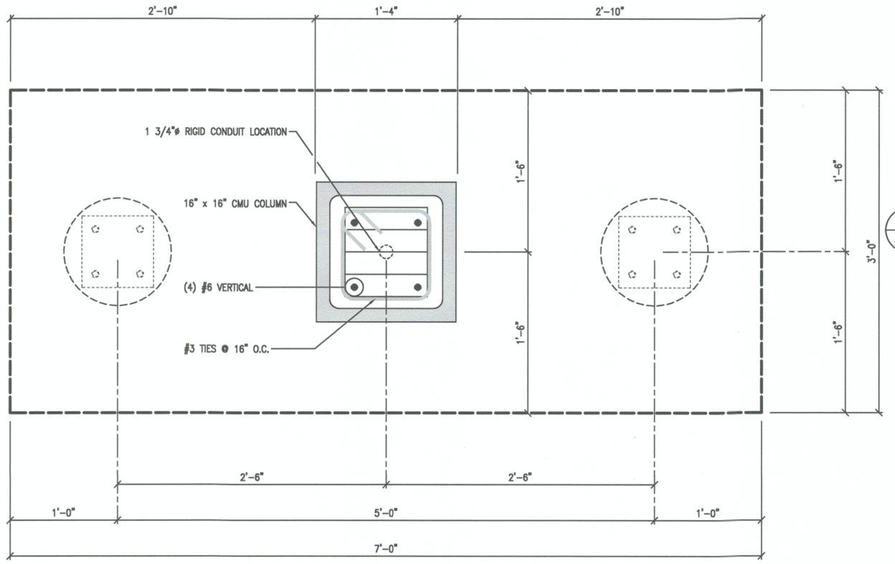

1 / S500 **TYPICAL FOOTING DETAIL**

1 0.5 0 1
GRAPHIC SCALE IN FEET

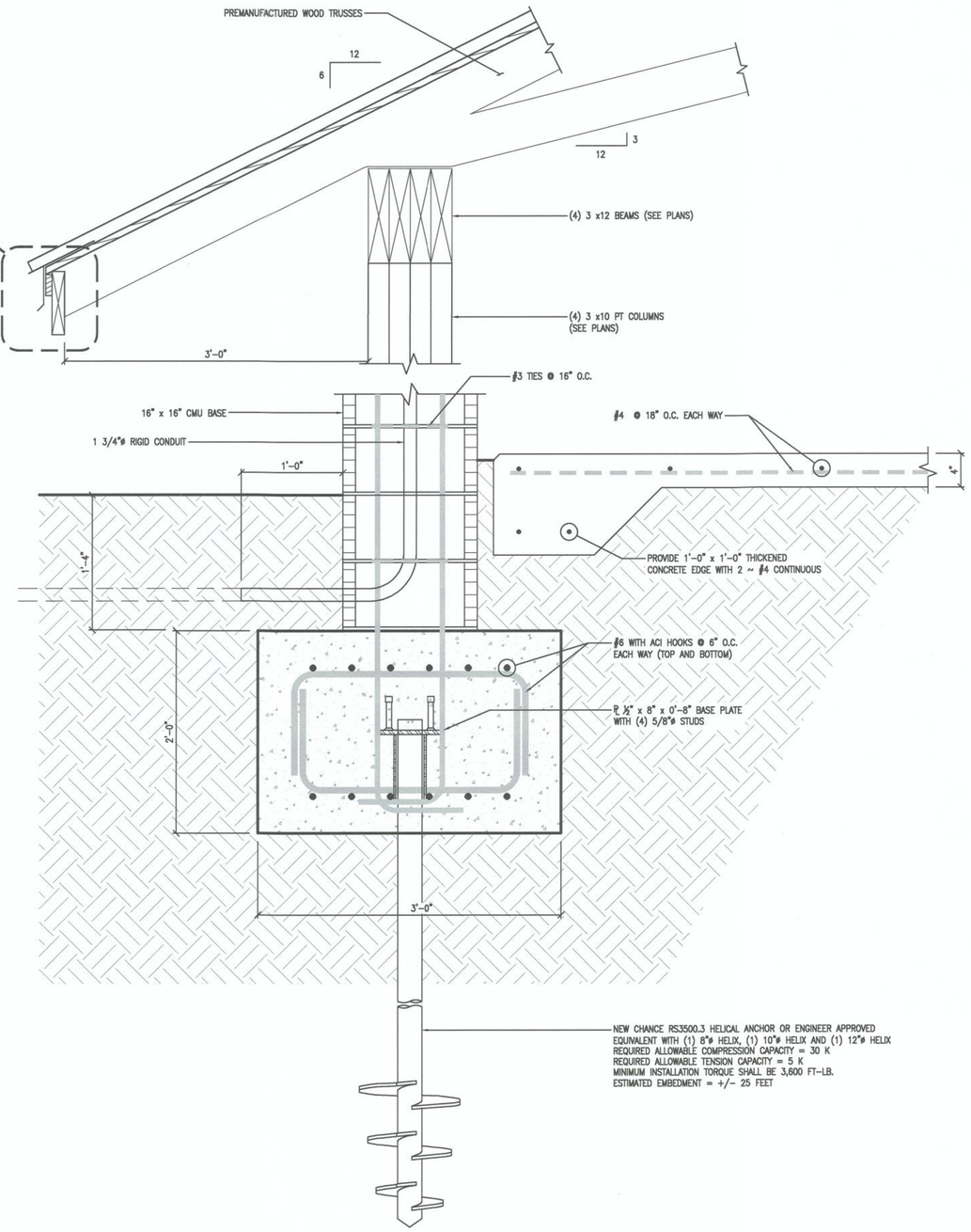

3 / S500 **TYPICAL FOOTING DETAIL**

1 0.5 0 1
GRAPHIC SCALE IN FEET

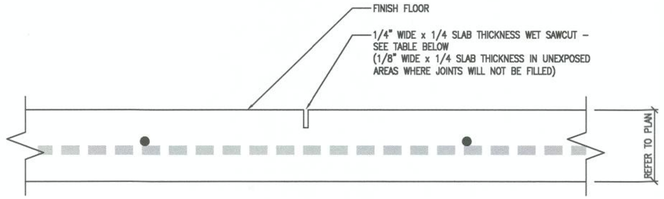

NOTE:
CONTROL JOINTS SHALL BE SAWN NOT LATER THAN THE FOLLOWING TABLE, OR 16 HOURS AFTER THE FINAL TROWELING (WHICHEVER IS LESS). WHERE TEMPERATURE IN DEGREES FAHRENHEIT AT THE TIME OF FINAL TROWELING. SAW CUTTING SHALL BE SUSPENDED ONLY IF THE LARGE AGGREGATE IS DISLODGED OR LOOSENED.
ALTERNATE USE PRE-FORMED JOINT FORMER.

TEMP – °F	TIME – HOURS
<40°	16
50°	14
60°	8 1/2
70°	5 1/2
80°	4
90°	3

2 / S500 **CONTROL/CONTRACTION JOINT**

N.T.S.

NOTE:
ELEVATIONS SHOWN HEREON ARE BASED ON NAVD '88 DATUM.
TO CONVERT TO NGVD '29 ADD 1.549' TO THE NAVD VALUE.

NOTE: THE SCALE OF THESE DRAWINGS HAVE CHANGED DUE TO REPRODUCTION.

Sunshine811

SYMBOL	REVISION	DATE
C		
D		

SYMBOL	REVISION	DATE
A		
B		

Department of Environmental Protection
Division of Recreation and Parks
Bureau of Design and Construction
3800 Commonwealth Blvd., Tallahassee, FL 32399 (850) 245-2157

WGI
2035 Vista Parkway
West Palm Beach, FL 33411
Phone No. 561.687.2220
Fax No. 561.687.1110
Registry No. 33574

WGI PROJECT NO. 2412.12

ISSUE DATE: FEBRUARY 2021
COMP. FILE No.:
STATE PROJECT No.: 61271C

DESIGNER : JRB
DRAWN BY: CAB
REVIEWED BY: CBL
CONSULTANT :

PROFESSIONAL REGISTRATION
JEFFREY R. TERSHMANN PE
LICENSE NUMBER 54525
STATE OF FLORIDA
PROFESSIONAL ENGINEER

THE BARNACLE STATE PARK

SHEET TITLE: FOUNDATION DETAILS

PROJECT TITLE: PAVILION REPLACEMENT

SHEET NO. S500

Craig Burkhardt p:\structures\2020-Jobs\2412.12 fdep barnacle house pavilion\07 structural dwgs\cadd 2412.12\S500_MM-OD-YY_61271C_F.dwg adobe pdf 24x36 Plotted: 3/31/2022 5:07:24 PM Saved: 10/27/2021 2:10:54 PM

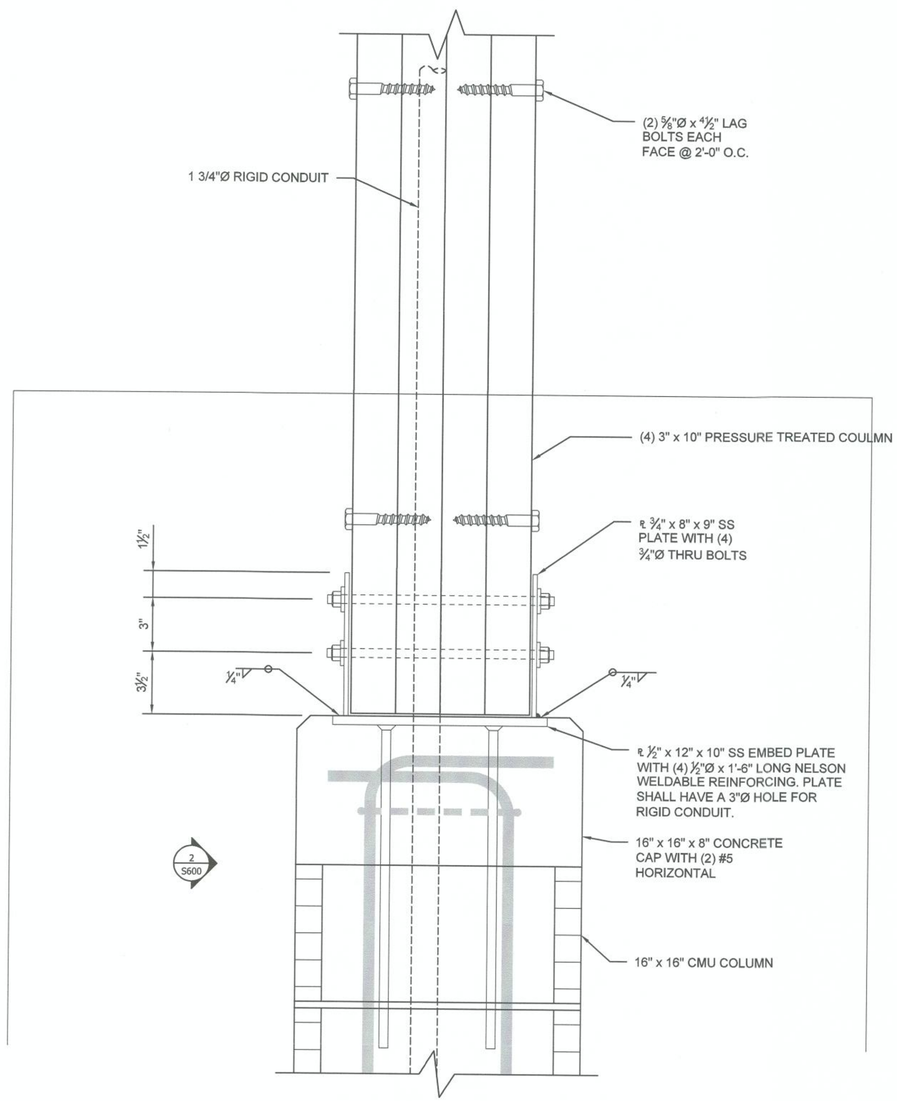

1 S600 **WOOD COLUMN TO CMU BASE CONNECTION DETAIL**

0.5 0.25 0 1
GRAPHIC SCALE IN FEET

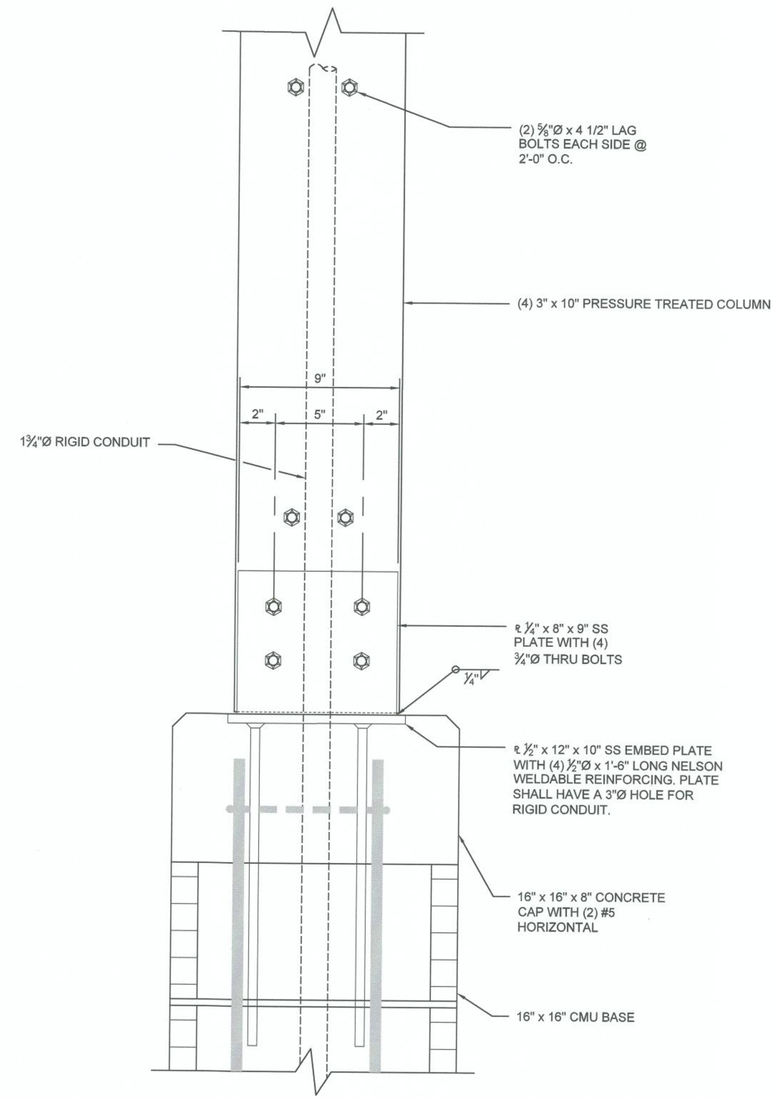

2 S600 **WOOD COLUMN TO CMU BASE CONNECTION DETAIL**

0.5 0.25 0 1
GRAPHIC SCALE IN FEET

NOTE:
ELEVATIONS SHOWN HEREON ARE BASED ON NAVD '88 DATUM.
TO CONVERT TO NGVD '29 ADD 1.549' TO THE NAVD VALUE.

NOTE: THE SCALE OF THESE DRAWINGS HAVE CHANGED DUE TO REPRODUCTION.

Sunshine811

SYMBOL	REVISION	DATE
C		
D		

SYMBOL	REVISION	DATE
A		
B		

ISSUE DATE: FEBRUARY 2021
COMP. FILE No.:
STATE PROJECT No.: 61271C

DESIGNER : JRB
DRAWN BY: CAB
REVIEWED BY: CBL
CONSULTANT :

2035 Vista Parkway
West Palm Beach, FL 33411
Phone No. 561.687.8220
Fax No. 561.687.1110
Registry No. 33574

WGI PROJECT NO. 2412.12

PROFESSIONAL REGISTRATION
JEFFREY R. BUCKHANDT, PE
No. 61271
STATE OF FLORIDA
PROFESSIONAL ENGINEER

Department of Environmental Protection
Division of Recreation and Parks
Bureau of Design and Construction
3800 Commonwealth Blvd., Tallahassee, FL 32399 (850) 245-2157

THE BARNACLE STATE PARK

SHEET TITLE: DETAILS (1)

PROJECT TITLE: PAVILION REPLACEMENT

SHEET NO. S600

Craig Burkhardt p:\structures\2020-jobs\2412.12 fdep barnacle house pavilion\07 structural dwgs\cadd 2412.12\S600_MM-DD-YY_61271C_F.dwg adobe pdf 24x36 Plotted: 3/31/2022 5:07:30 PM Saved: 3/30/2022 4:15:27 PM

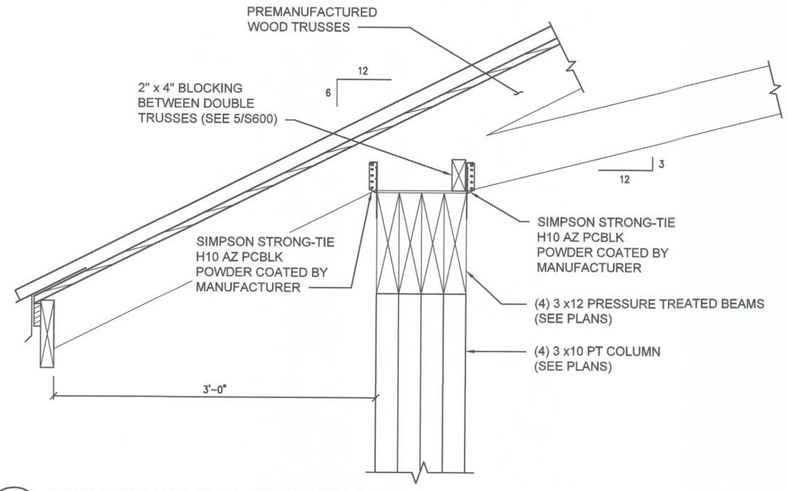

1 / S601 **ROOF TRUSS TO BEAM CONNECTION DETAIL**

1 0.5 0 1
GRAPHIC SCALE IN FEET

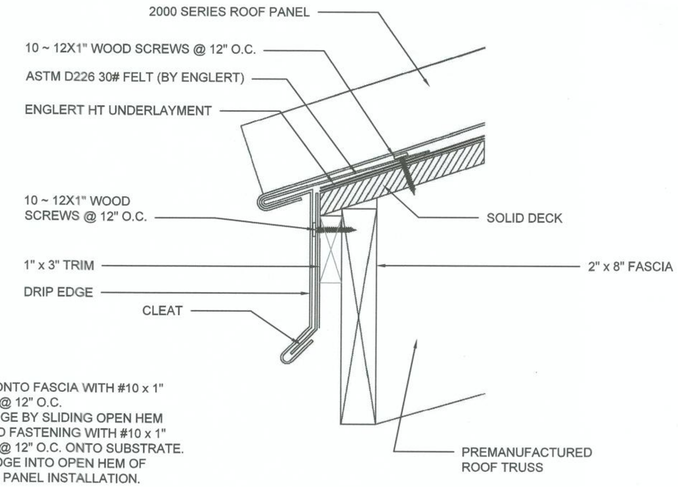

NOTES:

1. INSTALL CLEAT ONTO FASCIA WITH #10 x 1" WOOD SCREWS @ 12" O.C.
2. INSTALL DRIP EDGE BY SLIDING OPEN HEM ONTO CLEAT AND FASTENING WITH #10 x 1" WOOD SCREWS @ 12" O.C. ONTO SUBSTRATE.
3. ENGAGE DRIP EDGE INTO OPEN HEM OF PANEL TO BEGIN PANEL INSTALLATION.

2 / S601 **EAVE FLASHING DETAIL**

N.T.S.

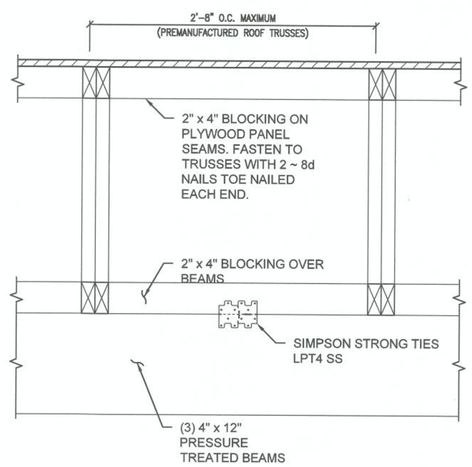

3 / S601 **TYPICAL BLOCKING BETWEEN DOUBLE TRUSSES OVER BEAM**

N.T.S.

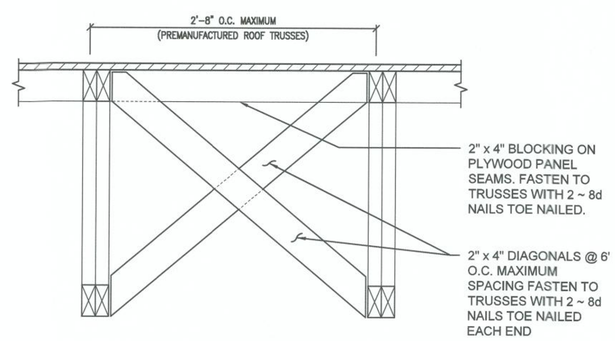

4 / S601 **TYPICAL CROSS BRACING BETWEEN DOUBLE TRUSSES**

N.T.S.

NOTE:
ELEVATIONS SHOWN HEREON ARE BASED ON NAVD '88 DATUM.
TO CONVERT TO NGVD '29 ADD 1.549' TO THE NAVD VALUE.

NOTE: THE SCALE OF THESE DRAWINGS HAVE CHANGED DUE TO REPRODUCTION.

Sunshine811

SYMBOL	REVISION	DATE
C		
D		

SYMBOL	REVISION	DATE
A		
B		

Department of Environmental Protection
Division of Recreation and Parks
Bureau of Design and Construction
3800 Commonwealth Blvd., Tallahassee, FL 32399 (850) 245-2157

ISSUE DATE: FEBRUARY 2021
COMP. FILE No.:
STATE PROJECT No.: 61271C

DESIGNER : JRB
DRAWN BY: CAB
REVIEWED BY: CBL
CONSULTANT :

WGI
2035 Vista Parkway
West Palm Beach, FL 33411
Phone No. 561.687.2220
Fax No. 561.687.1110
Registry No. 33574

WGI PROJECT NO. 2412.12

PROFESSIONAL REGISTRATION
JEFFREY R. BERGMANN, P.E.
No. 61272
STATE OF FLORIDA
PROFESSIONAL ENGINEER

THE BARNACLE STATE PARK

SHEET TITLE: DETAILS (2)

PROJECT TITLE: PAVILION REPLACEMENT

SHEET NO. S601

Craig Burkhardt p:\structures\2020-jobs\2412.12 fdep barnacle house pavilion\07 structural dwgs\cadd 2412.12\S600_MM-DD-YY_61271C_F.dwg adobe pdf 24x36 Plotted: 3/31/2022 5:07:32 PM Saved: 3/30/2022 4:15:27 PM

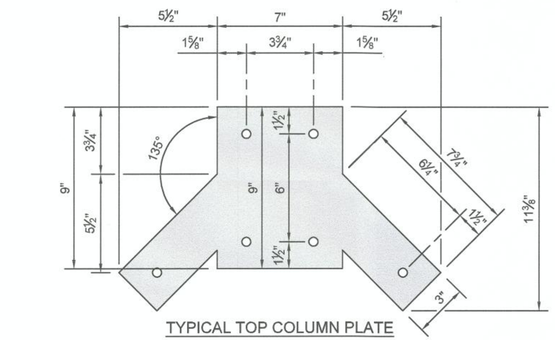

TYPICAL TOP COLUMN PLATE

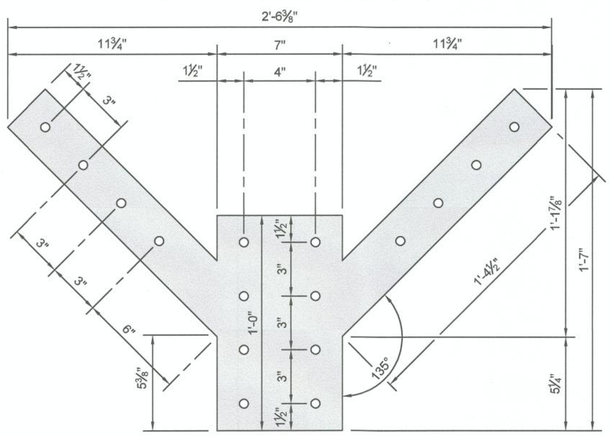

TYPICAL BOTTOM COLUMN PLATE

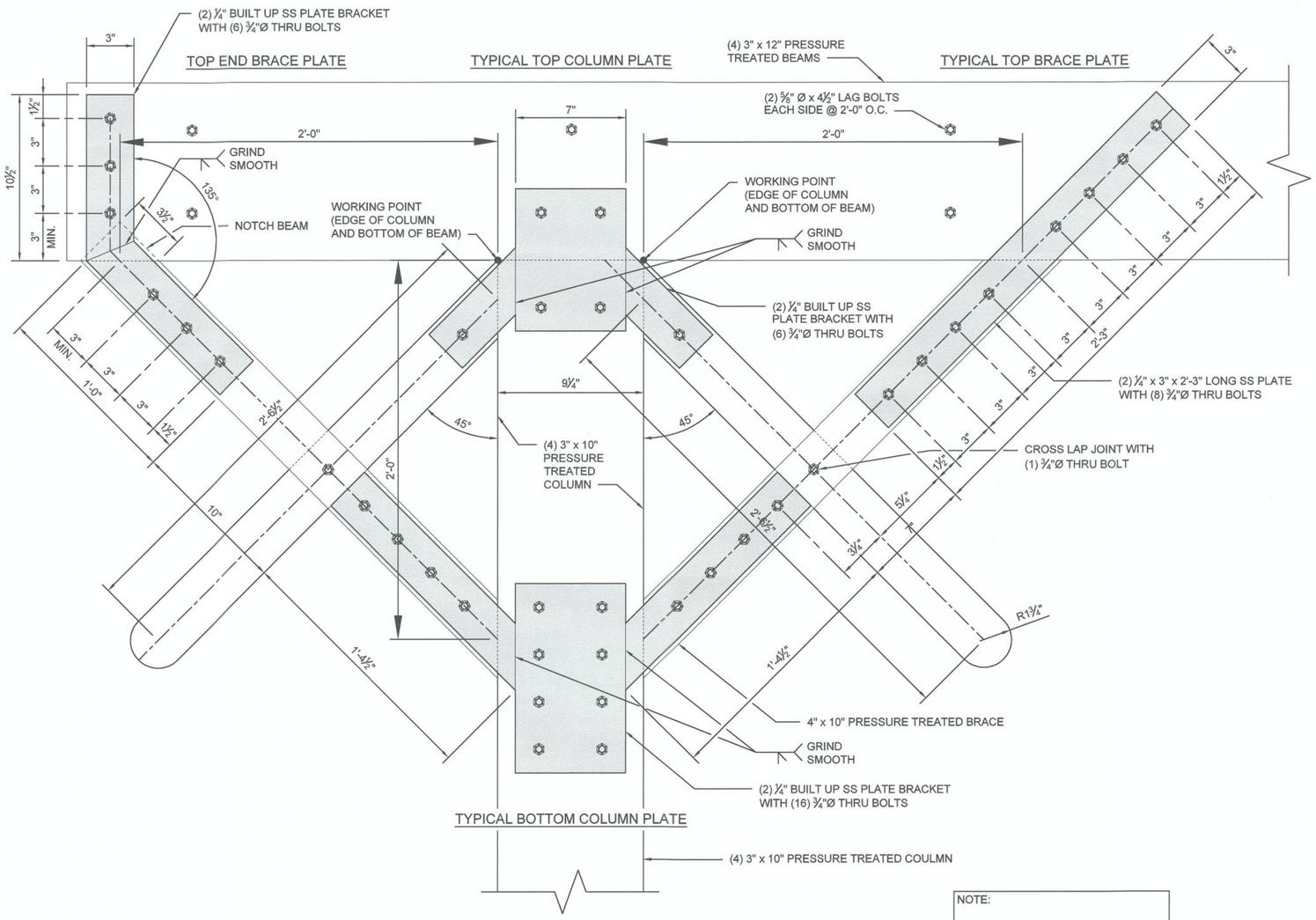

NOTE:

ALL FABRICATED SS316 STEEL CONNECTIONS TO BE COATED IN ACCORDANCE TO THE CLEANING AND COATING NOTES ON SHEET G103. PAINTED BLACK

1 / S602 **STEEL PLATE FOR BRACES DETAILS**

0.5 0.25 0 1
GRAPHIC SCALE IN FEET

2 / S602 **KNEE BRACE CONNECTION DETAIL**

0.5 0.25 0 1
GRAPHIC SCALE IN FEET

NOTE:
ELEVATIONS SHOWN HEREON ARE BASED ON NAVD '88 DATUM.
TO CONVERT TO NGVD '29 ADD 1.549' TO THE NAVD VALUE.

NOTE: THE SCALE OF THESE DRAWINGS HAVE CHANGED DUE TO REPRODUCTION.

Sunshine 811

SYMBOL	REVISION	DATE
C		
D		

SYMBOL	REVISION	DATE
A		
B		

Department of Environmental Protection
Division of Recreation and Parks
Bureau of Design and Construction
3800 Commonwealth Blvd., Tallahassee, FL 32399 (850) 245-2157

WGI
2035 Vista Parkway
West Palm Beach, FL 33411
Phone No. 561 687 2220
Fax No. 561 687 1110
Registry No. 33574

WGI PROJECT NO. 2412.12

ISSUE DATE: FEBRUARY 2021
COMP. FILE No.:
STATE PROJECT No.: 61271C

DESIGNER : JRB
DRAWN BY: CAB
REVIEWED BY: CBL
CONSULTANT :

PROFESSIONAL REGISTRATION
JEFFREY R. BERGMANN, P.E.
No. 50159
STATE OF FLORIDA
PROFESSIONAL ENGINEER

THE BARNACLE STATE PARK

SHEET TITLE: DETAILS (3)

PROJECT TITLE: PAVILION REPLACEMENT

SHEET NO. S602

Craig Burkhardt p:\structures\2020-jobs\2412.12 fdep barnacle house pavilion\07 structural dwgs\cadd 2412.12\S600_MM-00-YY_61271C_F.dwg adobe pdf 24x36 Plotted: 3/31/2022 5:07:37 PM Saved: 3/30/2022 4:15:27 PM

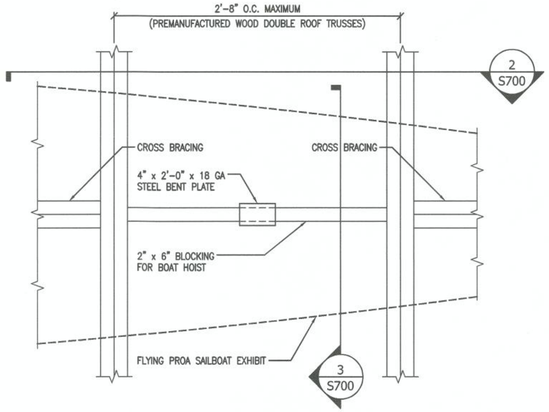

1 S700 **ENLARGED FRAMING PLAN AT BOAT HOIST LOCATION**

N.T.S.

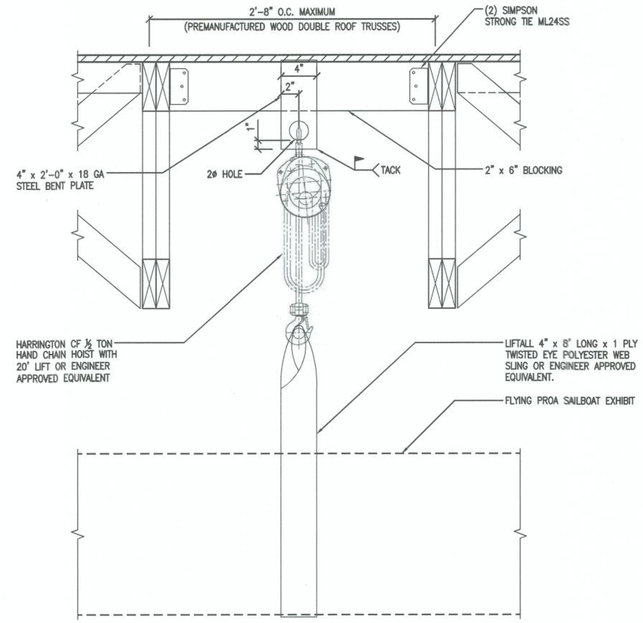

2 S700 **BOAT HOIST DETAIL**

N.T.S.

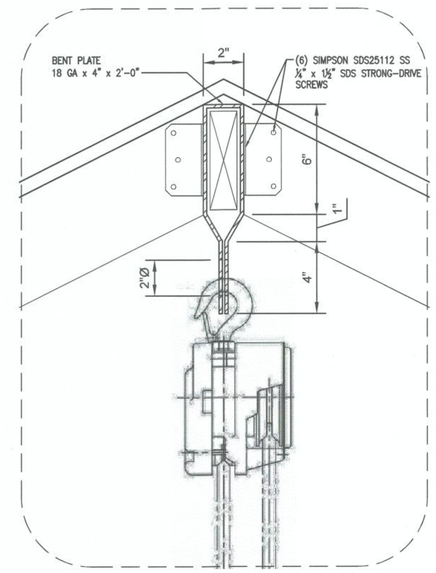

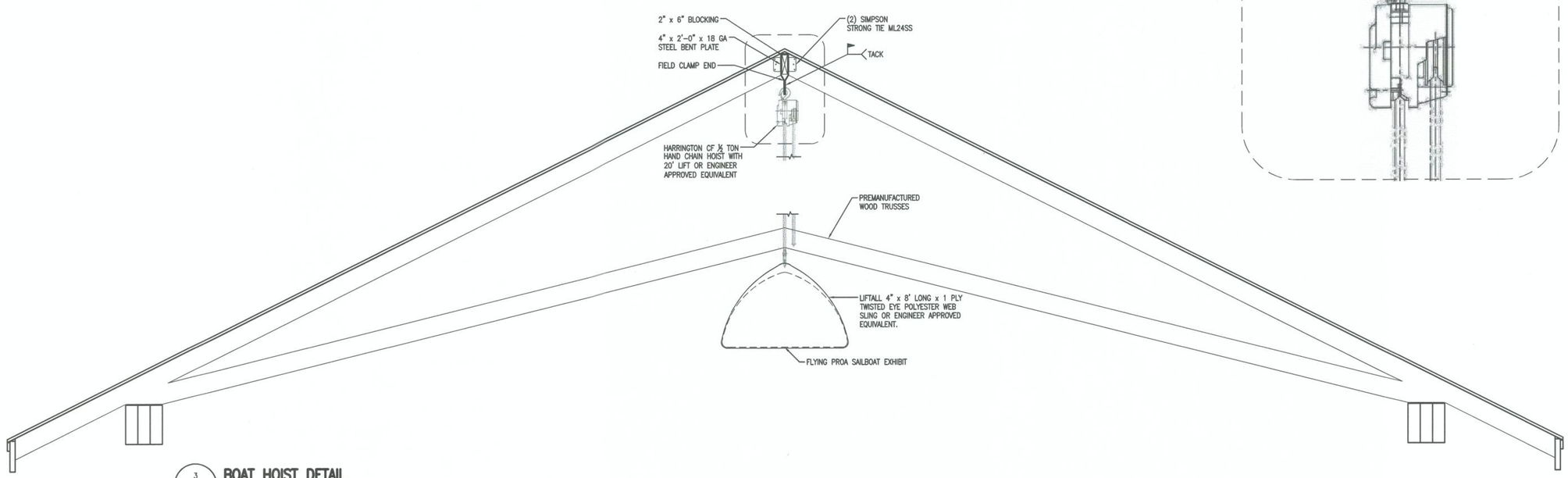

3 S700 **BOAT HOIST DETAIL**

1 0.5 0 1
GRAPHIC SCALE IN FEET

NOTE: THE SCALE OF THESE DRAWINGS HAVE CHANGED DUE TO REPRODUCTION.

Sunshine811

SYMBOL	REVISION	DATE
C		
D		

SYMBOL	REVISION	DATE
A		
B		

ISSUE DATE: FEBRUARY 2021
COMP. FILE No.:
STATE PROJECT No.: 61271C

DESIGNER : JRB
DRAWN BY: CAB
REVIEWED BY: CBL
CONSULTANT :

WGI
2035 Vista Parkway
West Palm Beach, FL 33411
Phone No. 561.687.1220
Fax No. 561.687.1110
Registry No. 33574
WGI PROJECT NO. 2412.12

Department of Environmental Protection
Division of Recreation and Parks
Bureau of Design and Construction
3800 Commonwealth Blvd., Tallahassee, FL 32399 (850) 245-2157

PROFESSIONAL REGISTRATION
JEFFREY R. BERGMANN, PE
No. 61259
STATE OF FLORIDA
PROFESSIONAL ENGINEER

THE BARNACLE STATE PARK

SHEET TITLE: BOAT HOIST DETAILS

PROJECT TITLE: PAVILION REPLACEMENT

SHEET NO. S700

Craig Burkhardt: p:\structures\2020-jobs\2412.12 (dep barnacle house pavilion\07 structural dwgs\cadd 2412.12\S700_MM-00-YY_61271C_F.dwg adobe pdf 24x36 Plotted: 3/31/2022 5:07:45 PM Saved: 10/27/2021 2:10:15 PM

DIVISION 16 - ELECTRICAL SPECIFICATIONS

THIS DIVISION INCLUDES THE FOLLOWING:

POWER DISTRIBUTION.
LIGHTING FIXTURES AND RECEPTACLES.
POWER, INTERLOCK AND CONTROL WIRING FOR MECHANICAL SYSTEMS.
WIRING FOR OWNER FURNISHED EQUIPMENT AND EQUIPMENT FURNISHED UNDER OTHER DIVISION.

COMPLETED INSTALLATION SHALL MEET REQUIREMENTS OF THE 2020 FLORIDA BUILDING CODE.

COMPLETE INSTALLATION SHALL MEET REQUIREMENTS OF THE WILLIAMS-STEIGER OCCUPATIONAL SAFETY AND HEALTH ACT OF 1970, ITS SUBSEQUENT AMENDMENTS, AND INTERPRETATIONS OF THE ACT PROMULGATED BY OCCUPATIONAL SAFETY AND HEALTH ADMINISTRATION OF THE DEPARTMENT OF LABOR.

THE ENTIRE SYSTEM, INCLUDING DEVICES, APPARATUS AND EQUIPMENT SHALL BE GROUNDED IN ACCORDANCE WITH ARTICLE 250, NATIONAL ELECTRICAL CODE, CURRENT EDITION.

WIRE AND CABLE

BRANCH CIRCUIT WIRING NO.10 AND SMALLER SHALL BE COPPER, SOLID, TYPE THHN/THWN. NO CONDUCTOR SHALL BE SMALLER THAN NO.12.
FEEDER AND POWER WIRING No.8 AND LARGER SHALL BE STRANDED COPPER, TYPE THHN/THWN.

CONTROL AND FIRE ALARM SYSTEM WIRING SHALL BE No.14 AWG, TYPE THHN.

COLOR CODE ALL CONDUCTORS IN ACCORDANCE NFPA 70, ARTICLE 210.

CONDUIT

LIGHTING, POWER AND CONTROL WIRING SHALL BE INSTALLED IN CONDUIT AND/OR UNDERFLOOR RACEWAYS. RIGID GALVANIZED CONDUIT SHALL BE USED WHERE CAST IN CONCRETE, WHERE EXPOSED TO POTENTIAL MECHANICAL DAMAGE, WHERE RUN OUTDOORS EXPOSED TO WEATHER, AND FOR PANEL FEEDERS. CONDUIT INSTALLED UNDERGROUND SHALL BE SCHEDULE 40 PVC. PROVIDE 24" FLEXIBLE METAL CONDUIT AT CONNECTIONS TO ALL MECHANICAL EQUIPMENT. USE LIQUID-TIGHT WHERE EXPOSED TO WEATHER OR LIQUIDS. PROVIDE PULLSTRING IN ALL SPARE AND EMPTY CONDUITS.

BOXES

EXTERIOR BOXES SHALL BE CAST METAL, UL LISTED, NEMA 3R.

WIRING DEVICES

RECEPTACLES AND SWITCHES SHALL BE EQUIVALENT TO HUBBELL #5352 AND #1221 SERIES. DEVICE PLATES SHALL BE SMOOTH NYLON. DIMMERS SHALL BE EQUAL TO HUBBELL 'AS' SERIES WITH CAPACITY AS REQUIRED FOR THE LOAD SERVED. ISOLATED GROUND RECPTACLES SHALL BE EQUAL TO HUBBELL #IG5362 SERIES. GFI RECEPTACLES SHALL BE EQUAL TO HUBBELL #GF5352 SERIES. WEATHERPROOF COVERPLATES SHALL BE UL LISTED WEATHERPROOF WHEN IN USE. TAMPER RESISTANT RECEPTACLES SHALL BE EQUAL TO HUBBELL #HBLSG63H SERIES.

SAFETY SWITCHES

SAFETY SWITCHES AND DISCONNECTS SHALL BE HEAVY DUTY, HORSEPOWER RATED, LOCKABLE IN THE 'OFF' POSITION. PROVIDE NEMA 3R ENCLOSURE FOR OUTDOOR LOCATIONS, NEMA 1 ENCLOSURE FOR INDOOR LOCATIONS. FUSES SHALL BE DUAL ELEMENT TIME DELAY TYPE.

LIGHTING

EXTERIOR LIGHTING SHALL BE AS SELECTED BY THE OWNER AND SHALL BE EQUAL TO ILLUMINA. FIXTURES SHALL BE SUPPORTED DIRECTLY FROM STRUCTURE BY A MINIMUM OF TWO CORNERS, INDEPENDENT OF CEILING SYSTEM.

LIGHTING CONTROLS SYMBOLS SCHEDULE

ALL SYMBOLS DO NOT NECESSARILY APPEAR ON THESE DRAWINGS

NOTES:
1. ALL WALL MOUNTED LIGHTING CONTROLS ARE MOUNTED AT 48" AFF TO CENTER, UNO.
2. OCCUPANCY SENSORS SHALL BE DUAL TECHNOLOGY TYPE. LEVITON OR EQUAL BY SENSORSWITCH.
3. RESET TO FACTORY SETTING AT THE END OF CONSTRUCTION PHASE.
4. TOP OF SWITCH IN ON POSITION SHALL NOT EXCEED 48" AFF. IF SWITCH IS OVER COUNTERTOP, TOP OF SWITCH SHALL NOT EXCEED 46" AFF.

SYMBOL	DESCRIPTION	REMARKS
S	20A SINGLE POLE SWITCH	NOTE 1, 3, 4
S^{XX}	SENSOR SWITCH REFER TO SUBSCRIPTS	NOTE 1, 3, 4
OS	CEILING MOUNTED OCCUPANCY SENSOR	NOTE 2
PC	PHOTOCELL	
OS	CORNER MOUNTED OCCUPANCY SENSOR	NOTE 2

LIGHTING CONTROLS SUBSCRIPTS INDICATE THE FOLLOWING:

a,b - SWITCH LEG BEING CONTROLLED
3 - THREE WAY SWITCH
4 - FOUR WAY SWITCH
D - DIMMING SWITCH, RATED 2000 WATTS, UNO.
WP - WEATHERPROOF
EXP- EXPLOSION PROOF
DS - SINGLE GANG DECORA STYLE SWITCH WITH THREE (3) MOMENTARY PUSH BUTTONS: ON/OFF, RAISE AND LOWER DIMMING, WITH SOFT CLICK INDICATOR AND GREEN LED INDICATOR LIGHT. COLOR AS SELECTED BY ARCHITECT. EXACT SWITCH LOCATION AS SHOWN ON PLAN.
K - KEY OPERATED
MC - MOMENTARY CONTACT
P - PILOT LIGHT
T - REMOTE EMERGENCY BATTERY TEST SWITCH
F - FAN CONTROL SWITCH
VS - MANUAL 'ON' SINGLE GANG DECORA STYLE SWITCH WITH THREE (3) MOMENTARY PUSH BUTTONS: ON/OFF, RAISE AND LOWER DIMMING, WITH VACANCY SENSOR, SOFT CLICK INDICATOR AND GREEN LED INDICATOR LIGHT. COLOR AS SELECTED BY ARCHITECT. EXACT SWITCH LOCATION AS SHOWN ON PLAN.

WIRING DEVICE SYMBOL SCHEDULE

ALL SYMBOLS DO NOT NECESSARILY APPEAR ON THESE DRAWINGS.
ALL MOUNTING HEIGHTS ARE TO THE CENTER OF BOX, UNO.
ALL WALL MOUNTED DEVICES SHALL BE MOUNTED AT 18" AFF TO CENTER UNO.

SYMBOL	DESCRIPTION	REMARKS
	20A, 120V DUPLEX RECEPTACLE	
	20A, 120V DUPLEX RECEPTACLE WITH GROUND FAULT INTERRUPT (GFI)	
	20A, 120V DUPLEX RECEPTACLE WITH ISOLATED INSULATED GROUND	
	20A, 120V DOUBLE DUPLEX RECEPTACLE	
	20A, 120V DOUBLE DUPLEX RECEPTACLE WITH ISOLATED INSULATED GROUND	
	20A, 120V SIMPLEX RECEPTACLE	
	20A, 120V SIMPLEX RECEPTACLE WITH GROUND FAULT INTERRUPT (GFI)	
	SPECIAL PURPOSE RECEPTACLE. SEE PLANS FOR DETAILS	
	RECESSED FLOOR BOX WITH 20A, 120V DOUBLE DUPLEX RECEPTACLE	
	RECESSED FLOOR BOX WITH 20A, 120V DUPLEX RECEPTACLE	
	20A, 120V DUPLEX RECEPTACLE - TOP HALF CONTROLLED BY WALL SWITCH	
	MULTI OUTLET PLUG STRIP ASSEMBLY AS INDICATED ON POWER PLANS.	

SUBSCRIPTS INDICATE THE FOLLOWING:

WP - WEATHER RESISTANT RECEPTACLE IN A WEATHER PROOF IN-USE ENCLOSURE.
SP - RECEPTACLE WITH SURGE SUPPRESSION.
TR - TAMPER RESISTANT DUPLEX RECEPTACLE.
C - CLOCK RECEPTACLE. MOUNT AT 90" AFF.
48" - DEVICE MOUNTED AT 48" AFF. OTHER MOUNTING HEIGHTS AS INDICATED.
H - MOUNT DEVICE HORIZONTALLY.
EWC - RECEPTACLE SERVING ELECTRIC WATER COOLER. MOUNTING HEIGHT AS REQUIRED.
G - RECEPTACLE WITH INTEGRAL GROUND FAULT CIRCUIT INTERRUPER (GFCI).
OC - DEVICE MOUNTED OVER COUNTERTOP.

LIGHTING SYMBOLS SCHEDULE

ALL SYMBOLS DO NOT NECESSARILY APPEAR ON THESE DRAWINGS

NOTES:
1. IF WALL MOUNTED FIXTURE PROJECTS 4" OR MORE FROM FINISHED WALL THERE SHALL BE 80" VERTICAL CLEARANCE A.F.F.
2. PROVIDE A SEPARATE REFERENCE CONDUCTOR FOR THE FIXTURES BATTERY PACK, FED FROM THE SAME CIRCUIT AS THE FIXTURE. THIS REFERENCE CONDUCTOR SHALL NOT ROUTE THROUGH ANY LOCAL SWITCH OR LIGHTING CONTROL RELAY. ALL FIXTURES WITH EMERGENCY BATTERY PACKS SHALL BE SWITCHED AS SHOWN ON PLANS, UNO. ALL FIXTURES WITH EMERGENCY BATTERY PACKS SHALL BE PROVIDED WITH INTEGRAL RED TEST BUTTON, UNO.

SYMBOL	DESCRIPTION	REMARKS
	2' x 4' LIGHT FIXTURE	
	2' x 2' LIGHT FIXTURE	
	1' x 4' LIGHT FIXTURE	
	LINEAR STRIP LIGHTING FIXTURE	NOTE 1
	DOWNLIGHT	
	WALL WASH/ADJUSTABLE DOWNLIGHT - ARROW INDICATED DIRECTION OF BEAM	
	LINEAR LIGHT WALL MOUNTED FIXTURE	NOTE 1
	WALL SCONCE	NOTE 1
	TRACK HEAD	
	PENDANT	
	EXIT SIGN - SINGLE FACE	NOTE 1
	EXIT SIGN - DUAL FACE	NOTE 1
	DUAL HEAD EMERGENCY LIGHT WITH INTEGRAL BATTERY PACK	NOTE 1
	SINGLE HEAD SITE AREA LUMINAIRE	
	DUAL HEAD SITE AREA LUMINAIRE	
	EXISTING SINGLE HEAD SITE AREA LUMINAIRE	
	EXISTING DUAL HEAD SITE AREA LUMINAIRE	
	BOLLARD	
	LANDSCAPE LUMINAIRE	
HG-1	WHERE SHOWN, INDICATES PANEL AND CIRCUIT SERVING ALL FIXTURES IN THE SAME ROOM.	
	TYPICAL FIXTURE [CONNECTED TO EMERGENCY POWER SYSTEM.] [EQUIPPED WITH EMERGENCY BATTERY BALLAST.]	NOTE 2

INDICATES FIXTURE TYPE — A
NL — WHERE SHOWN, INDICATES NIGHT LIGHT. 24HR OPERATION
TYPICAL LIGHTING FIXTURE
INDICATES PANEL AND CIRCUIT SERVING FIXTURE — HG-1
CONTROL SWITCH LEG

ELECTRICAL ABBREVIATIONS

A	AMPERES	LTG	LIGHTING
ABV	ABOVE		
A/C	AIR CONDITIONING	MAX	MAXIMUM
ACT	ABOVE COUNTER TOP	MC	MECHANICAL CONTRACTOR
AFF	ABOVE FINISHED FLOOR	MCB	MAIN CIRCUIT BREAKER
AF	AMP FUSED	MCC	MOTOR CONTROL CENTER
AFG	ABOVE FINISHED GRADE	MCM	THOUSAND CIRCULAR MILS
AL	ALUMINUM	MDP	MAIN DISTRIBUTION PANEL
ARCH	ARCHITECT	MECH	MECHANICAL
ASB	ABOVE SPLASH BLOCK	MH	MANHOLE
ASC	ABOVE SUSPENDED CEILING	MIN	MINIMUM
ASD	ADJUSTABLE SPEED DRIVE	MISC	MISCELLANEOUS
AUTO	AUTOMATIC	MLO	MAIN LUG ONLY
AUX	AUXILIARY	MSB	MAIN SWITCHBOARD
ATS	AUTOMATIC TRANSFER SWITCH	MTD	MOUNTED
AWG	AMERICAN WIRE GAUGE		
		NEC	NATIONAL ELECTRICAL CODE
BFF	BELOW FINISH FLOOR	NEMA	NATIONAL ELECTRICAL MANUFACTURERS ASSOCIATION
BLDG	BUILDING		
BFG	BELOW FINISHED GRADE	NEUT	NEUTRAL
		NF	NON FUSED
C	CONDUIT	NIC	NOT IN CONTRACT
C/B	CIRCUIT BREAKER	NL	NIGHT LIGHT
CCTV	CLOSED CIRCUIT TELEVISION	N.O.	NORMALLY OPEN
CCT	CIRCUIT	N.C.	NORMALLY CLOSED
CLG	CEILING	NO.	NUMBER
COL	COLUMN	NTS	NOT TO SCALE
COMB	COMBINATION		
CONC	CONCRETE	OC	OVER COUNTERTOP
CONST	CONSTRUCTION	OD	OUTSIDE DIAMETER
		OFCI	OWNER FURNISHED CONTRACTOR INSTALLED
DFC	DOWN FROM CEILING		
DIA	DIAMETER	OH	OVERHEAD
DN	DOWN		
DWG	DRAWING	P	POLE
		PC	PLUMBING CONTRACTOR
EA	EACH	PF	POWER FACTOR
EC	ELECTRICAL CONTRACTOR	PH	PHASE
EF	EXHAUST FAN	PL	PROPERTY LINE
ELEC	ELECTRIC / ELECTRICAL	PNL	PANEL
EMER	EMERGENCY	PVC	POLYVINYL CHLORIDE
EMT	ELECTRICAL METALLIC TUBING		
EPO	EMERGENCY POWER OFF	RECPT	RECEPTACLE
EQUIP	EQUIPMENT	RE:	REFERENCE/REFER TO
EWC	ELECTRIC WATER COOLER	REQD	REQUIRED
EX	EXISTING	RGS	RIGID GALVANIZED STEEL
EXT	EXTERIOR	RM	ROOM
FA	FIRE ALARM	SCH	SCHEDULE
FACP	FIRE ALARM CONTROL PANEL	SPEC	SPECIFICATIONS
FLR	FLOOR/FLOORING	SVC	SERVICE
FXTR	FIXTURE		
		TEL	TELEPHONE
G	GROUND	TR	TAMPER RESISTANT
GC	GENERAL CONTRACTOR	TS	TRANSFER SWITCH
GD	GENERAL DUTY	TYP	TYPICAL
GEN	GENERATOR	TTB	TELEPHONE TERMINAL BOARD
GFI	GROUND FAULT INTERRUPT		
		UG	UNDERGROUND
HD	HEAVY DUTY	UL	UNDERWRITER'S LABORATORIES
HP	HORSEPOWER	UNO	UNLESS NOTED OTHERWISE
HT	HEIGHT		
HVAC	HEATING/VENTILATING/AIR CONDITIONING	V	VOLTS
		VA	VOLT - AMPERES
HW	HOT WATER	VSD	VARIABLE SPEED DRIVE
ID	INSIDE DIAMETER	W	WATTS
IG	ISOLATED GROUND	W/	WITH
IMT	INTERMEDIATE METAL	W/O	WITHOUT
		WP	WEATHER PROOF
J	JUNCTION BOX	WR	WEATHER RESISTANT
		WT	WEIGHT
KVA	KILOVOLT-AMPERES	WTR	WATER
KW	KILOWATTS	WW	WASTE WATER
KCMIL	THOUSAND CIRCULAR MILS		
		XFMR	TRANSFORMER

POWER DISTRIBUTION SYMBOL SCHEDULE

ALL SYMBOLS DO NOT NECESSARILY APPEAR ON THESE DRAWINGS

SYMBOL	DESCRIPTION	REMARKS
A-1,3,5	HOMERUN - TO CIRCUIT NO. 1,3,5 ON PANEL 'A'	
B100	FEEDER TAG. RE: ELECTRICAL FEEDER SCHEDULE FOR CONDUIT AND WIRE SIZE.	
	BRANCH CIRCUIT OR CONDUIT EXPOSED AND/OR SURFACE MOUNTED	
	BRANCH CIRCUIT OR CONDUIT UNDER FLOOR	
J	JUNCTION BOX	
	MOTOR	
S_M	MANUAL STARTER WITH THERMAL TRIP	
	DISCONNECT SWITCH	
	POWER AND/OR LIGHTING PANELBOARD, REFER TO PANELBOARD SCHEDULE	MOUNT AT 72" AFF TO CENTER
	SWITCHBOARD / DISTRIBUTION PANELBOARD, REFER TO SWITCHBOARD SCHEDULE OR RISER DIAGRAM	
SPD	SURGE PROTECTIVE DEVICE. RE: SURGE PROTECTIVE DEVICE SCHEDULE FOR CONFIGURATION.	

GENERAL ELECTRICAL NOTES

1. ELECTRICAL CONTRACTOR SHALL COMPLY WITH LATEST EDITION OF THE FLORIDA BUILDING CODE AND LOCAL AMENDMENTS.
2. ELECTRICAL CONTRACTOR SHALL COORDINATE WITH OTHER TRADES TO MINIMIZE CONFLICTS.
3. ALL WIRE AND CABLE SIZES ARE FOR COPPER, UNLESS NOTED OTHERWISE AS ALUMINUM.
4. NO CONDUCTOR SHALL BE LOADED BEYOND ITS ALLOWABLE AMPACITY.
5. CONFIRM WITH LOCAL CODES, MECHANICAL CONTRACTOR AND EQUIPMENT VENDORS ON THE LOCATION AND MOUNTING METHOD FOR DISCONNECT SWITCHES, MANUAL MOTOR STARTERS, COMBINATION STARTER/DISCONNECTS, ETC. PRIOR TO ELECTRICAL ROUGH-IN AND INSTALLATION.
6. ELECTRICAL CONTRACTOR SHALL DOUBLE CHECK ALL FEEDER CONDUCTOR AND CONDUIT SIZES WITH NEC AND LOCAL CODES PRIOR TO BID, ORDERING OR CUTTING CONDUCTORS.
7. ELECTRICAL CONTRACTOR SHALL COORDINATE WORK WITH ARCHITECTURAL DRAWINGS AND REPORT ANY DISCREPANCIES TO ARCHITECT/ENGINEER IMMEDIATELY. LIGHT FIXTURES ARE SHOWN IN APPROXIMATE LOCATION ONLY. REFER TO ARCHITECTURAL REFLECTED CEILING PLAN FOR EXACT LOCATION.
8. UNLESS OTHERWISE NOTED, BRANCH CIRCUIT CONDUCTORS SHALL BE COPPER (THW OR EQUAL) SIZED AS FOLLOWS:

BREAKER RATING	WIRE SIZE	BREAKER RATING	WIRE SIZE
15 AMP	#12 AWG	60 AMP	#4 AWG
20 AMP	#12 AWG	70 AMP	#4 AWG
30 AMP	#10 AWG	80 AMP	#3 AWG
40 AMP	#8 AWG	90 AMP	#2 AWG
50 AMP	#6 AWG	100 AMP	#1 AWG

ALL BRANCH CIRCUITS WITH AN OVERALL LENGTH IN EXCESS OF 75 FEET SHALL BE INCREASED IN WIRE SIZE TO ACCOMMODATE VOLTAGE DROP.

10. ELECTRICAL CONTRACTOR SHALL MAKE ALL FINAL CONNECTIONS TO OWNER PROVIDED EQUIPMENT.
11. ALL JUNCTION BOXES SHALL BE ACCESSIBLE FOR FUTURE SERVICE PER NEC. REFER TO ARCHITECTURAL DRAWINGS FOR CEILING TYPES AND POINTS OF ACCESS.
12. ALL SLEEVES THRU FLOOR SHALL BE SEALED WATERTIGHT AND SHALL TERMINATE MINIMUM 1" AFF.
13. CONTRACTOR SHALL VISIT SITE AND BECOME FAMILIAR WITH ALL EXISTING CONDITIONS, DETERMINE THE EXTENT OF DEMOLITION REQUIRED TO FACILITATE NEW CONSTRUCTION AND INCLUDE ALL SUCH WORK IN HIS BID. NO ADDITIONAL FUNDS WILL BE AUTHORIZED FOR ANY EXTRA WORK OR MATERIAL NECESSARY DUE TO THE FAILURE OF THE CONTRACTOR TO FAMILIARIZE THEMSELVES WITH THE EXISTING CONDITIONS OR FOR LACK OF COORDINATION BETWEEN TRADES.
14. PVC CONDUIT SHALL ONLY BE USED UNDERGROUND WITH PLASTIC COATED OR WRAPPED RIGID STEEL CONDUIT ELBOWS. ALL INTERIOR CONDUIT SHALL BE EMT.
15. SEE MECHANICAL FLOOR PLANS FOR THERMOSTAT LOCATIONS.
16. PROVIDE NYLON COVERPLATES FOR ALL OUTLET BOXES.
17. SEAL AROUND ALL EXTERIOR WALL PENETRATIONS.
18. DRAWINGS ARE SCHEMATIC IN NATURE AND MAY NOT BE DRAWN EXACTLY TO SCALE. CONTRACTOR IS RESPONSIBLE FOR COORDINATING EXACT ROUTING OF ALL SERVICES WITH EXISTING CONDITIONS AND ALL OTHER TRADES TO AVOID SPACING OR ROUTING PROBLEMS.
19. ALL CIRCUITS SHALL INCLUDE A GREEN GROUND CONDUCTOR SIZED IN ACCORDANCE WITH NEC 250.122, UNLESS NOTED OTHERWISE.
20. ALL PENETRATIONS OF FIRE RATED PARTITIONS DUE TO THE INSTALLATION OF THE ELECTRICAL SYSTEMS SHALL BE SEALED TO MAINTAIN THE FIRE RATING OF THE WALL AND/OR FLOOR/CEILING.
21. CONTRACTOR SHALL PROVIDE ACCURATE PANEL SCHEDULES. SCHEDULES SHALL INDICATE DEVICES AND/OR EQUIPMENT SERVED, LOCATION AND/OR ROOM NUMBERS.
22. WHERE NEW LIGHTS OR RECEPTACLES ARE NOTED TO BE CONNECTED TO AN EXISTING CIRCUIT, CONTRACTOR SHALL TRACE EXISTING CIRCUIT TO DETERMINE CIRCUIT LOADING. THE LOAD ON A 20 AMP CIRCUIT SHALL NOT EXCEED 16 AMPS. WHERE THIS CANNOT BE ACHIEVED, CONTRACTOR SHALL CONTACT ARCHITECT FOR ALTERNATE INSTRUCTIONS.
23. WHERE TIGHTENING TORQUE IS INDICATED AS A NUMERIC VALUE OR IN INSTALLATION INSTRUCTIONS PROVIDED BY THE MANUFACTURER, A CALIBRATED TORQUE TOOL SHALL BE USED TO ACHIEVE THE INDICATED VALUE, UNLESS THE EQUIPMENT MANUFACTURER HAS PROVIDED INSTALLATION INSTRUCTIONS FOR AN ALTERNATIVE METHOD OF ACHIEVING THE REQUIRED TORQUE. CONTRACTOR SHALL PROVIDE A LETTER TO THE ELECTRICAL INSPECTOR STATING THAT ALL ELECTRICAL EQUIPMENT HAS BEEN TORQUED ACCORDING TO THE MANUFACTURER'S SPECIFICATIONS.

NOTE: THE SCALE OF THESE DRAWINGS HAVE CHANGED DUE TO REPRODUCTION.

Sunshine811

SYMBOL	REVISION	DATE
A		
B		
C		
D		

ISSUE DATE: FEBRUARY 2021
COMP. FILE No.:
STATE PROJECT No. 61271C

DESIGNER: CS
DRAWN BY: MC
REVIEWED BY: JM
Consultant:

WGI®
2035 Vista Parkway
West Palm Beach, FL 33411
Phone No. 561 687.2220
Fax No. 561 687.1110
Registry No. 35374
WGI PROJECT NO. 2412.12

Department of Environmental Protection
Division of Recreation and Parks
Bureau of Design and Construction
3800 Commonwealth Blvd., Tallahassee, FL 32399 (850) 245-2157

4/27/22

PROFESSIONAL REGISTRATION CASEY RYAN SVEIVEN, PE
CASEY RYAN SVEIVEN LICENSE No. 90074 STATE OF FLORIDA PROFESSIONAL ENGINEER

SHEET TITLE: ELECTRICAL SYMBOLS

PROJECT TITLE: THE BARNACLE STATE PARK — PAVILION REPLACEMENT

SHEET NO. E001

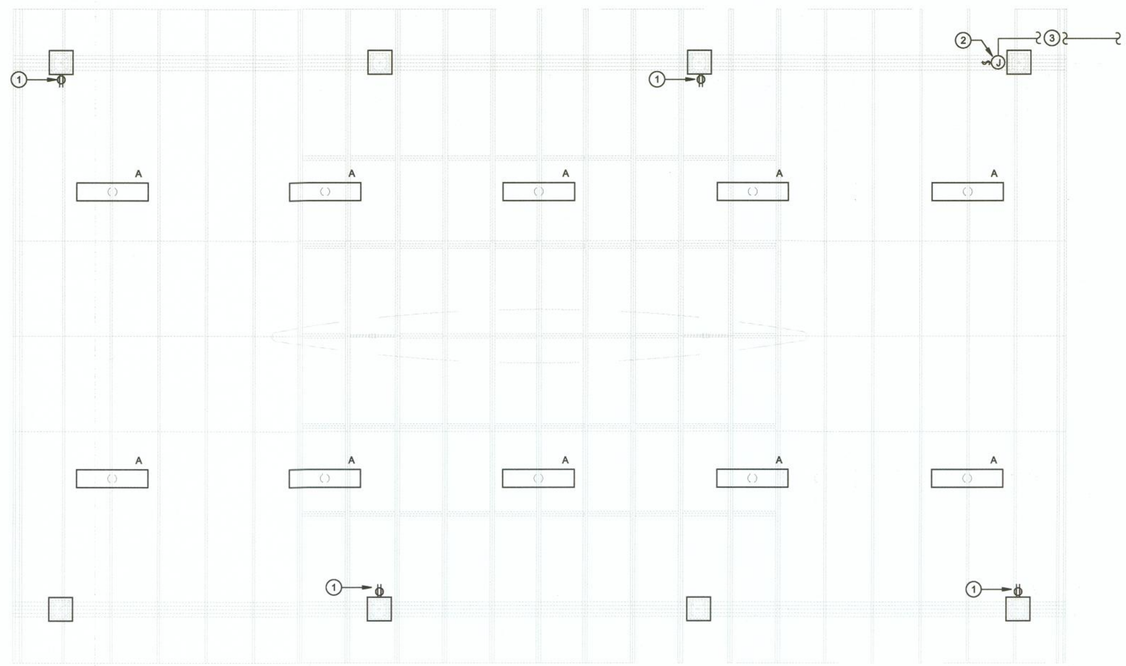

1 LEVEL 1 - ELECTRICAL
1/4" = 1'-0"

KEYNOTES - E100

1. GFCI RECEPTACLE. PROVIDE WATERPROOF/WEATHER RESISTANT WITH IN-USE ENCLOSURE. COORDINATE ROUTE OF CONDUIT IN COLUMN WITH STRUCTURAL PLANS AND DETAILS.
2. PROVIDE 2-CIRCUIT, ELECTRONIC, ASTRONOMIC TIME CLOCK IN OUTDOOR RATED ENCLOSURE. MANUFACTURER: INTERMATIC – M#ET2825CP, OR EQUAL.
3. APPROXIMATE EXISTING ROUTE OF ELECTRICAL CONDUIT AND CONDUCTORS SERVING THE PAVILION FROM THE EXISTING BOAT HOUSE. DEMOLISH CONDUIT AND WIRE BACK TO NEW, IN-GROUND, OUTDOOR RATED PULLBOX AT THIS POINT. REFER TO DEMOLITION NOTES THIS SHEET FOR ADDITIONAL INFORMATION.

DEMOLITION NOTES:

CONTRACTOR SHALL SUPPORT DEMOLITION OF THIS TRADE BY REMOVAL OF ALL WORK ASSOCIATED TO THIS TRADE BACK TO THE POINT SHOWN AT KEYNOTE X. CONTRACTOR SHALL VERIFY DEMOLITION SCOPE AND ENSURE ALL MATERIALS TO BE MAINTAINED BY OWNER IN THIS TRADE ARE REMOVED FROM THIS SPACE AND DELIVERED TO THE OWNER PRIOR TO DEMOLITION.

ELECTRICAL NOTES:

1. ALL NEW LIGHTING AND RECEPTACLES SHOWN SHALL BE POWERED VIA THE EXISTING CIRCUIT/S SERVING THE PAVILION. RE: SHEET E300 FOR ADDITINAL INFORMATION.
2. CONTRACTOR SHALL COORDINATE WITH STRUCTURAL FOR ALL CONDUIT RISER POINTS UP CMU COLUMNS. CONDUIT RUN EXPOSED OVERHEAD SHALL BE ROUTED IN A NEAT AND WORKMAN LIKE FASHION PARALLEL OR PERPINDICULAR TO BUILDING LINES AS NECESSARY.

NOTE: THE SCALE OF THESE DRAWINGS HAVE CHANGED DUE TO REPRODUCTION.

Sunshine 811

SYMBOL	REVISION	DATE
A		
B		

SYMBOL	REVISION	DATE
C		
D		

ISSUE DATE: FEBRUARY 2021
COMP. FILE No.:
STATE PROJECT No. 61271C

DESIGNER: CS
DRAWN BY: MC
REVIEWED BY: JM
Consultant:

WGI
2035 Vista Parkway
West Palm Beach, FL 33411
Phone No. 561-687-2220
Fax No. 561-687-1110
Registry No. 33574

WGI PROJECT NO. 2412.12

Department of Environmental Protection
Division of Recreation and Parks
Bureau of Design and Construction
3800 Commonwealth Blvd., Tallahassee, FL 32399 (850) 245-2157

PROFESSIONAL REGISTRATION
CASEY R. SVEIVEN, PE
4/27/22
CASEY RYAN SVEIVEN
LICENSE
No. 90074
STATE OF FLORIDA
PROFESSIONAL ENGINEER

THE BARNACLE STATE PARK

SHEET TITLE: ELECTRICAL PLAN

PROJECT TITLE: PAVILION REPLACEMENT

SHEET NO. E100

LIGHTING CONTROL NOTES

COMPLIANCE
- LIGHTING IS DESIGNED IN COMPLIANCE WITH 2020 FLORIDA BUILDING CODE - ENERGY CONSERVATION.

EXTERIOR LIGHTING:
- LIGHTING SHALL BE 'ON' ASTRONOMIC TIME CLOCK DETERMINED SUNSET AND 'OFF' AT PRE-DETERMINED TIMES DEFINED BY THE OWNER.
- TIME CLOCK SHALL BE PROVIDED WITH 2 HOUR MANUAL OVERRIDE.

GENERAL:
- PROVIDE FUNCTIONAL TESTING AND COMMISSIONING OF AUTOMATIC LIGHTING SYSTEMS BY A REGISTERED DESIGN PROFESSIONAL IN ACCORDANCE WITH 2015 IECC SECTION C408.3. PROVIDE TWO HOURS OF TRAINING FOR THE OWNER AT TIME OF COMMISSIONING.

LIGHTING CONTROLS:
- LIGHTING CONTROLS BASIS OF DESIGN IS ACUITY BRANDS INTERMATIC.

LIGHT FIXTURE SCHEDULE

TYPE	MANUFACTURER	FIXTURE CATALOG NO.	LAMPS		FIXTURE WATTS	VOLTAGE	MOUNTING	REMARKS
			LAMP #	LAMP TYPE				
A	ILLUMINA	BS100LED-A-4-HT-120-277V-TM	1	LED. 1503 LUMENS	54 W	120 V	SURFACE	EXTERIOR LED LINEAR FIXTURE. 0-10V DIMMING. WET LISTED.

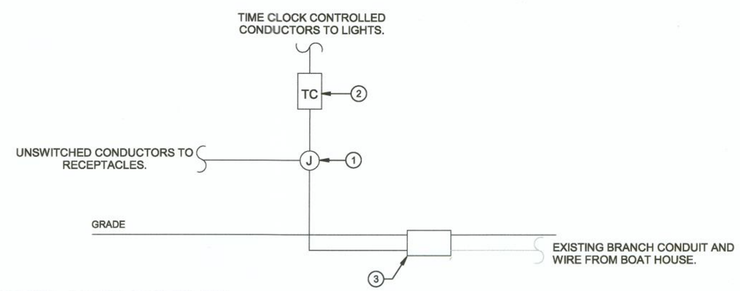

1 PARTIAL RISER DIAGRAM
NOT TO SCALE

KEYNOTES - E300

1 WEATHERPROOF JUNCTION BOX.
2 TIME CLOCK AND MANUAL OVERRIDE FOR LIGHTING CONTROL.
3 IN-GROUND PULLBOX. INTERCEPT EXISTING CIRCUIT AND EXTEND AS SHOWN TO NEW DEVICES.

CIRCUITING NOTE:

ALL RECEPTACLES AND LIGHTING SHALL BE POWERED BY THE EXISTING 20A/1P/120V CIRCUIT ROUTED TO THE PAVILION FROM THE BOAT HOUSE LOAD CENTER LABELED "PAVILION LIGHTS".

THE NEW LOAD ON THE EXISTING 20A/1P/120V CIRCUIT IS CALCULATED AS FOLLOWS:

RECEPTACLE LOAD: (4)*180VA = 720VA

LIGHTING LOAD: (10)*54VA = 540VA

ALL EXISTING LOADS ON THIS CIRCUIT ARE DEMOLISHED => EXISTING LOAD = 0VA

TOTAL NEW LOAD = 540VA + 720VA = 1260VA => 1260VA/120V = 10.5A

NOTE: THE SCALE OF THESE DRAWINGS HAVE CHANGED DUE TO REPRODUCTION.

Sunshine 811

SYMBOL	REVISION	DATE
A		
B		
C		
D		

Department of Environmental Protection
Division of Recreation and Parks
Bureau of Design and Construction
3800 Commonwealth Blvd., Tallahassee, FL 32399 (850) 245-2157

ISSUE DATE: FEBRUARY 2021
COMP. FILE No.:
STATE PROJECT No. 61271C

DESIGNER: CS
DRAWN BY: MC
REVIEWED BY: JM
Consultant:

WGI
2035 Vista Parkway
West Palm Beach, FL 33411
Phone No. 561 687 2220
Fax No. 561 687 1110
Registry No. 33574

WGI PROJECT NO. 2412.12

PROFESSIONAL REGISTRATION: CASEY R. SVEVEN, PE
CASEY RYAN SVEVEN LICENSE No. 90074 STATE OF FLORIDA PROFESSIONAL ENGINEER
4/27/22

THE BARNACLE STATE PARK

SHEET TITLE: ELECTRICAL SCHEDULES & DETAILS

PROJECT TITLE: PAVILION REPLACEMENT

SHEET NO. E200

Type: _____

Project: _____

ILLUMINA®

LED | WET | IP65 | IK05

TITLE 20 TITLE 24

TURTLE LED

- The **TURTLE LED** is a fully shielded luminaire that is FWC approved.
- Beghelli's turtle light solution uses amber LED's because the light is consistent and only created in the 580-640 visible spectrum. The **TURTLE LED** luminaire as a wavelength of 590 nanometers.
- The **TURTLE LED** is wildlife-friendly lighting ideal for areas where excessive artificial lighting can disturb ecosystems, such as coastal areas where sea turtles need a dark sky to orient and migrate towards the ocean.
- **DIFFUSER:** Frosted UV stabilized polycarbonate diffuser/enclosure, providing even light distribution.
- **OPERATING TEMP:**
  HT (AC Only) -40°F to 104°F (-40°C to 40°C)
  SA (AC & Emergency) 32°F to 104°F (0°C to 40°C)

APPLICATION: Ideal for applications along coastal areas such as parking garages, balconies and breezeways.

CONFIGURATIONS

MODEL	LENGTH	OPERATION	INPUT
BS100LED-A	2 (2ft)	HT (AC only)	120-277V
	4 (4ft)	SA (AC & EM)	

MOUNTING	OPTIONS
AC [1] (aviation cable)	SS (stainless steel clips)
SPK [2] (single pendant kit)	FP (face protection)
SVLSPK [2] (swivel single pendant kit)	TPS[3] (tamper proof screws)
DPK [2] (double pendant kit)	B (black housing)
CH [2] (chain hang kit)	CL (clear lens **only available for 4ft**)
JM[2] (direct mount to j-box)	CCS[4] (custom color shield)
TM (trunion mount [2])	

NOTE 1: Specify length for AC. 50", 73", 100", 150", 250" fully adjustable.
NOTE 2: SPK, DPK, CH & TM options, min 6'.
NOTE 3: JM option - the unit is no longer unit location, but clamp location.
NOTE 4: TP-tamper proof screws require a special bit (TPB), order as needed.
NOTE 5: Custom color for exterior of shield only.

ELECTRICAL:
- Amber LED (590 nanometers)
- Input: 120V-277V, 50-60HZ
- Fuse protection available

POWER LINE/FEED:
- 3-wire, solid type 18awg, pre-stripped 12"
- Leads for quick in-field connection and hot load disconnect feature.

DIMMING:
0 - 10V dimming is standard. (compatible with most dimming systems, contact factory for more information).

SHIELD: Black aluminum shield directs the light on the ground and reduces stray light as required by the FWC.

MOUNTING: Surface mount configuration is standard with integrated stainless steel mounting brackets. Additional mounting systems are available: including aviation cable, pendants, chain, trunion, and direct to junction box configurations.

Suspension height is to be specified when ordering any suspension mount units: AC, SPK, DPK & CH. Junction mount (JM) configuration allows for direct mount to recessed junction box, 3" hole and 3/4" thick neoprene gasket provided.

FLORIDA WILDLIFE APPROVED: Beghelli's **TURTLE LED (BS100LED-Amber)** is FWC approved and meets the requirements for sea turtle lighting.

WAVELENGTH: Certain wavelengths of light have minimal effects on the sea turtles senses. Light in the higher spectrum (yellow and red wavelengths or 580-640 nanometers) have less effect on the turtles while light from the lower spectrum has a greater effect (moonlight falls within the lower blue/violet spectrum). Our **TURTLE LED** wavelength is 590 nanometers.

WEIGHT: 10 lbs. / 4.5 kilo.

WARRANTY: 5 year warranty, see website for full warranty details.

Beghelli LUCE www.beghelliusa.com 12/11/18

Beghelli reserves the right to change, without notice, specifications or materials that in our opinion will not alter the function or performance of the product. Technical specifications that appear on www.beghelliusa.com supersede all other versions existing in print or electronic form.

ILLUMINA® TURTLE LED

PHOTOMETRIC DATA

BS100LED-A-4HT120-277V

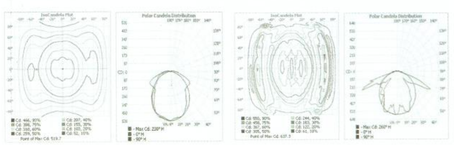

BS100LED-A-4HT120-277V-CL

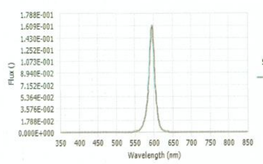

Spectral response of the Radiant Flux
(350nm to 850nm – calibrated range of the Spectroradiometer).

ENERGY CHART

LAMP	LENGTH	LUMEN OUTPUT	CONSUMPTION WATTAGE	L70 (hrs.)
BS100LED-A-4HT-120-277V	4FT	1503	54	100,000
BS100LED-A-4HT-120-277V-CL	4FT	1737	54	100,000

Beghelli reserves the right to change, without notice, specifications or materials that in our opinion will not alter the function or performance of the product. Technical specifications that appear on www.beghelliusa.com supersede all other versions existing in print or electronic form.

12/11/18 www.beghelliusa.com Beghelli LUCE

Calculation Summary							
Label	CalcType	Units	Avg	Max	Min	Avg/Min	Max/Min
Barnacle House Pavilion	Illuminance	Fc	5.88	8.6	2.9	2.03	2.97

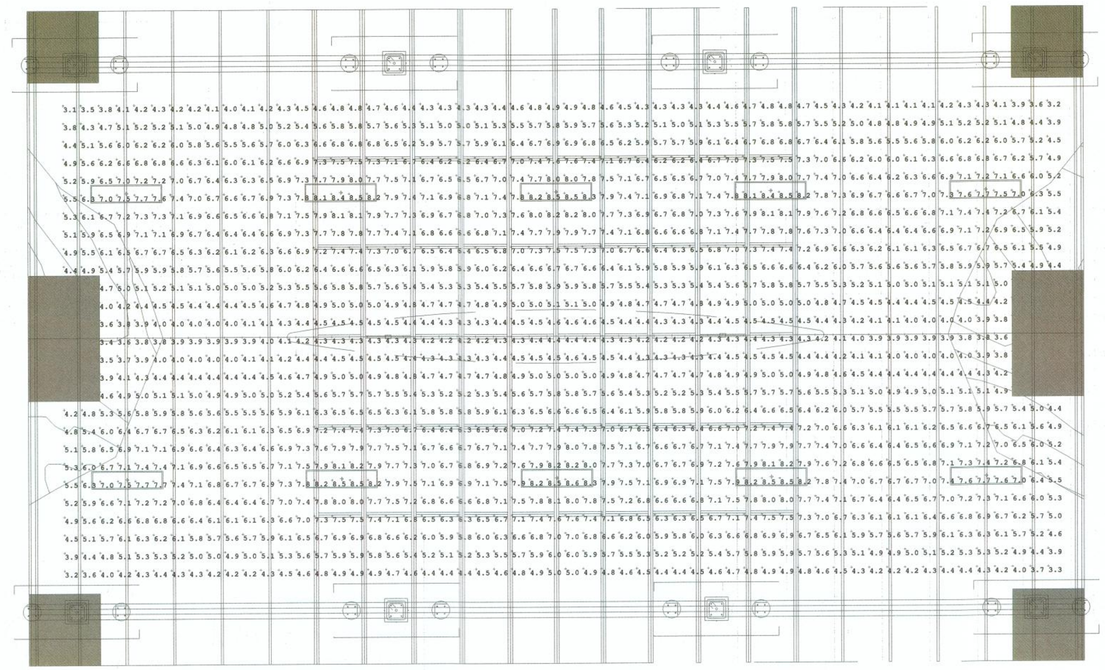

1 LEVEL 1 - LIGHTING
1/4" = 1'-0"

NOTE: THE SCALE OF THESE DRAWINGS HAVE CHANGED DUE TO REPRODUCTION.

Sunshine811

SYMBOL	REVISION	DATE
A		
B		
C		
D		

Department of Environmental Protection
Division of Recreation and Parks
Bureau of Design and Construction
3800 Commonwealth Blvd., Tallahassee, FL 32399 (850) 245-2157

ISSUE DATE: FEBRUARY 2021
COMP. FILE No.:
STATE PROJECT No.: 61271C

DESIGNER: C.S.
DRAWN BY: MC
REVIEWED BY: JM
Consultant:

WGI
2035 Vista Parkway
West Palm Beach, FL 33411
Phone No. 561.687.2220
Fax No. 561.687.1110
Registry No. 33574
WGI PROJECT NO. 2412.12

PROFESSIONAL REGISTRATION
CASEY RYAN SVEHEN, PE
LICENSE No. 90074
STATE OF FLORIDA
PROFESSIONAL ENGINEER
4/27/22

THE BARNACLE STATE PARK

SHEET TITLE: PHOTOMETRICS

PROJECT TITLE: PAVILION REPLACEMENT

SHEET NO. E300

COM*check* Software Version 4.1.4.2

Exterior Lighting Compliance Certificate

Project Information

Energy Code: 2017 Florida Building Code, Energy Conservation
Project Title:
Project Type: Alteration
Exterior Lighting Zone 2 (Residentially zoned area)

Construction Site: Owner/Agent: Designer/Contractor:

Allowed Exterior Lighting Power

A Area/Surface Category	B Quantity	C Allowed Watts / Unit	D Tradable Wattage	E Allowed Watts (B X C)
Outdoor Event Canopy (Plaza area)	2156 ft2	0.14	Yes	302
			Total Tradable Watts (a) =	302
			Total Allowed Watts =	302
			Total Allowed Supplemental Watts (b) =	600

(a) Wattage tradeoffs are only allowed between tradable areas/surfaces.
(b) A supplemental allowance equal to 600 watts may be applied toward compliance of both non-tradable and tradable areas/surfaces.

Proposed Exterior Lighting Power

A Fixture ID : Description / Lamp / Wattage Per Lamp / Ballast	B Lamps/ Fixture	C # of Fixtures	D Fixture Watt.	E (C X D)
Outdoor Event Canopy (Plaza area 2156 ft2): Tradable Wattage				
A: A: Other:	1	10	54	540
			Total Tradable Proposed Watts =	540

Exterior Lighting PASSES

Exterior Lighting Compliance Statement

Compliance Statement: The proposed exterior lighting alteration project represented in this document is consistent with the building plans, specifications, and other calculations submitted with this permit application. The proposed exterior lighting systems have been designed to meet the 2017 Florida Building Code, Energy Conservation requirements in COM*check* Version 4.1.4.2 and to comply with any applicable mandatory requirements listed in the Inspection Checklist.

CASEY SVEIVEN, PE — Name - Title
Signature
04/27/22 — Date

COM*check* Software Version 4.1.4.2

Inspection Checklist

Energy Code: 2017 Florida Building Code, Energy Conservation

Requirements: 0.0% were addressed directly in the COM*check* software

Text in the "Comments/Assumptions" column is provided by the user in the COMcheck Requirements screen. For each requirement, the user certifies that a code requirement will be met and how that is documented, or that an exception is being claimed. Where compliance is itemized in a separate table, a reference to that table is provided.

Section # & Req.ID	Plan Review	Complies?	Comments/Assumptions
C405.6 [PR17][1]	Plans, specifications, and/or calculations provide all information with which compliance can be determined for the electrical systems and equipment and document where exceptions are claimed. Provisions are made for metering individual tenant units. Feeder connectors (for feeder and branch circuits) sized in accordance with approved plans with maximum drop of 5% voltage drop total.	☐Complies ☐Does Not ☐Not Observable ☐Not Applicable	
C103.2 [PR8][1]	Plans, specifications, and/or calculations provide all information with which compliance can be determined for the exterior lighting and electrical systems and equipment and document where exceptions to the standard are claimed. Information provided should include exterior lighting power calculations, wattage of bulbs and ballasts, transformers and control devices.	☐Complies ☐Does Not ☐Not Observable ☐Not Applicable	

Additional Comments/Assumptions:

Section # & Req.ID	Rough-In Electrical Inspection	Complies?	Comments/Assumptions
C405.2.5 [EL25][null]	Automatic lighting controls for exterior lighting installed. Controls will be daylight controlled, set based on business operation time-of-day, or reduce connected lighting > 30%.	☐Complies ☐Does Not ☐Not Observable ☐Not Applicable	

Additional Comments/Assumptions:

Section # & Req.ID	Final Inspection	Complies?	Comments/Assumptions
C405.5.1 [FI19][1]	Exterior lighting power is consistent with what is shown on the approved lighting plans, demonstrating proposed watts are less than or equal to allowed watts.	☐Complies ☐Does Not ☐Not Observable ☐Not Applicable	*See the Exterior Lighting fixture schedule for values.*

Additional Comments/Assumptions:

NOTE: THE SCALE OF THESE DRAWINGS HAVE CHANGED DUE TO REPRODUCTION.

Sunshine 811

SYMBOL	REVISION	DATE
C		
D		

SYMBOL	REVISION	DATE
A		
B		

Department of Environmental Protection
Division of Recreation and Parks
Bureau of Design and Construction
3800 Commonwealth Blvd., Tallahassee, FL 32399 (850) 245-2157

ISSUE DATE: FEBRUARY 2021
COMP. FILE No:
STATE PROJECT No. 61271C

DESIGNER: CS
DRAWN BY: MC
REVIEWED BY: JM
Consultant:

WGI
2035 Vista Parkway
West Palm Beach, FL 33411
Phone No. 561 687 2220
Fax No. 561 687 1110
Registry No. 33574

WGI PROJECT NO. 2412.12

PROFESSIONAL REGISTRATION
CASEY R. SVEIVEN, PE
4/27/22
CASEY RYAN SVEIVEN * LICENSE * No. 90074 STATE OF FLORIDA PROFESSIONAL ENGINEER

SHEET TITLE: THE BARNACLE STATE PARK
PROJECT TITLE: LIGHTING COMCHECK
PAVILION REPLACEMENT

SHEET NO. E800