Registration Condition(s)

EQ-885 KUS-USA, Inc. SSS and SSL Model Fuel Sensors used for AST Overfill Protection

1. If the sensor does not include the high-level alarm option, the gauge must be visible and facing the product transfer operator per Rule 62-762.501(2)(e)2.a., Florida Administrative Code.
2. The gauge is calibrated to 90% capacity (by manufacturer and specific to tank) when it registers “F”, at which time the fuel delivery must stop.
3. An annual operability test must be performed for all overfill protection devices (included).

ANNUAL OPERABILITY TESTING REQUIREMENTS (Rule 62-762.701)

Annual Operability Testing with Gauge:

- Remove the sensor from the tank.
- Physically move the float on the downtube from the bottom up and back to the bottom while visually checking the gauge.
- Unit is working properly when the float moves the entire range and reads properly at each point on the gauge.

- Note: if using an ohm meter to test the unit, ensure the two wires at the top of the sender are isolated from the tank and connected to the ohm meter only. Follow the same procedure as above but check the reading on the ohm tester instead. Check with your supplier if you unsure of what the ohms range value should be.

Annual Operability Testing with High Level Alarm.

- Remove the sensor from the tank.
- Physically move the float on the downtube to the point where the High-Level Alarm is located.
- Unit is working properly when the High-Level Alarm is activated at the target point.

- Note: an ohm meter may be used to check the switch. Ensure the two wires at the top of the sender are isolated from the tank and connected to the ohm meter only. Move the float on the down tube to the switch location. The ohm tester should beep if unit is working properly.

KUS Electric Sending Unit Installation Guide

KUS Promise: Direct Replacement guaranteed for reading from 240-30 ohms range. Designed for Water, Diesel and / or Gasoline applications, constructed out of a durable 316 stainless steel. With our sender, you can be assured of years of efficient service **For your safety and for the best results, pre-read the following instructions completely before installation of your KUS Sending Unit.**

WARNING!! IMPORTANT: AVOID USING POWER TOOLS AROUND FUEL VAPORS WHICH ARE EASILY COMBUSTIBLE

BEFORE INSTALLATION:

- **You will need** a tape measure, a 5/16" HEX head screwdriver (or socket), to complete the installation.
- **Replace existing sender** by removing the old unit. **CAUTION,** the hole pattern is not evenly spaced, mark the tank screw hole (on the tank) that is on the opposite side of the electrical lead egress, **this is your lead hole**.
- **Determine the proper sending unit length** for your tank by measuring from the inside bottom to the outside top of the tank. A MINIMUM 1" clearance must be maintained between the tank bottom and the float retaining collar. Clearance must also be accounted for the adjacent side or the baffle of a tank when determining the proper length.

NOTE: FAILURE TO MAINTAIN PROPER CLEARANCE MAY RESULT IN THE UNIT TO MALFUNCTION, CAUSE TANK DAMAGE, AND WILL VOID WARRANTY OF THE UNIT.

PROPER SENDING UNIT TANK INSTALLATION:

- **Slide gasket over down tube**, aligning the 5-hole screw pattern to fit flush against the underside of the mounting plate. NOTE: THE SCREW HOLE PATTERN IS NOT SYMMETRICAL; THERE IS ONLY ONE WAY TO PROPERLY ALIGN THE GASKET. The **lead hole** is 180 degrees from (opposite side of) the sender wire egress.
- **Position new unit above the tank**, aligning the screw hole pattern in the mounting plate with the hole pattern in the top of the tank. Align the sender **lead hole** with the tank **lead hole (**marked previously)
- **Install your KUS sender,** (with the aligned gasket**)** by inserting the down tube into the tank.
- **Secure sending unit to tank,** tightening the mounting screws into place in a star shaped pattern. **DO NOT OVER-TIGHTEN. THIS WEAKENS THE SEAL,** excessive torque or re-tightening can cause the gasket underneath the sender head to be over-compressed or pinched in at least one area, dramatically reducing the service life of the gasket. This could result in failure (leakage), while in service**.**
- **For a NO LEAK install,** a leak test of this area should be conducted. Pressurize the tank to 3 PSI, looking for bubbles using soapy water around the seal. (see Figure 3)
- **IMPORTANT:** IF UNSURE OF THIS OR ANY OF THE DETAILED PROCEDURES, SEEK PROFESSIONAL ASSISTANCE.

PROPER WIRING INSTALLATION:

- **Connect ground (pink) wire** from the KUS sending unit to a common grounding hook-up.
- **Connect (black) wire** from the KUS sending unit to gauge hook-up. If your gauge has color coded hook-ups, maintain this coding as you connect the sender and ground wires.

WARNING!! GASOLINE IS EXTREMELY FLAMMABLE. KEEP TANK AREA FREE FROM SPARKS AND FLAMES. EMPTY THE TANKS OF FUEL & FUMES BEFORE CONTINUING WITH INSTALLATION.

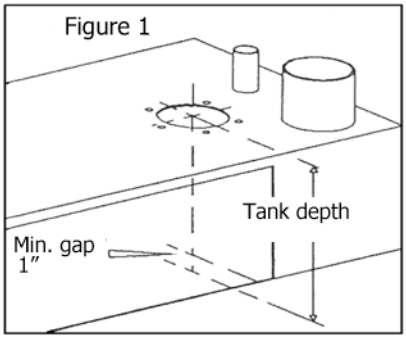

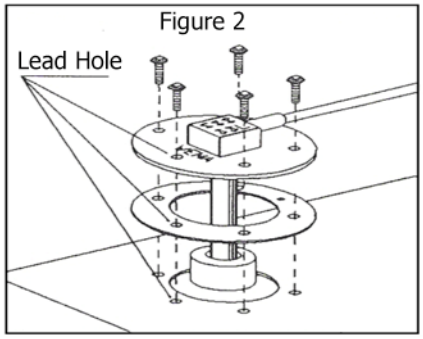

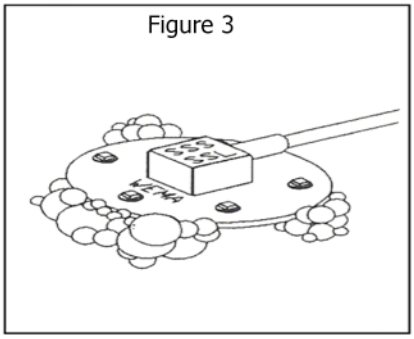

KUS • 15 N.E. 3RD STREET • FORT LAUDERDALE, FL 33301
PHONE: 954-463-1075 • FAX: 954-463-1270 • WWW.KUS-USA.COM

S5 Series

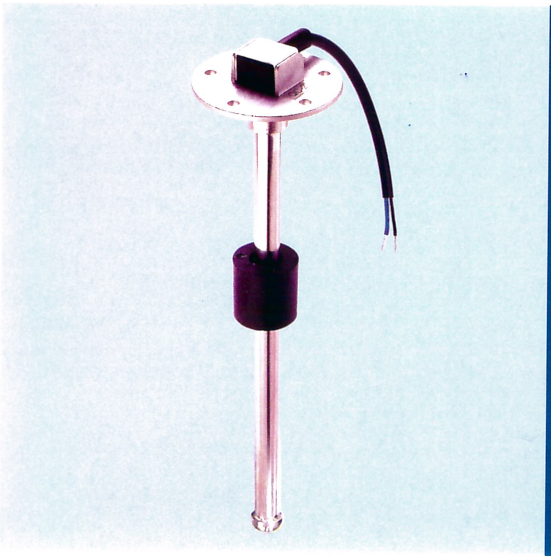

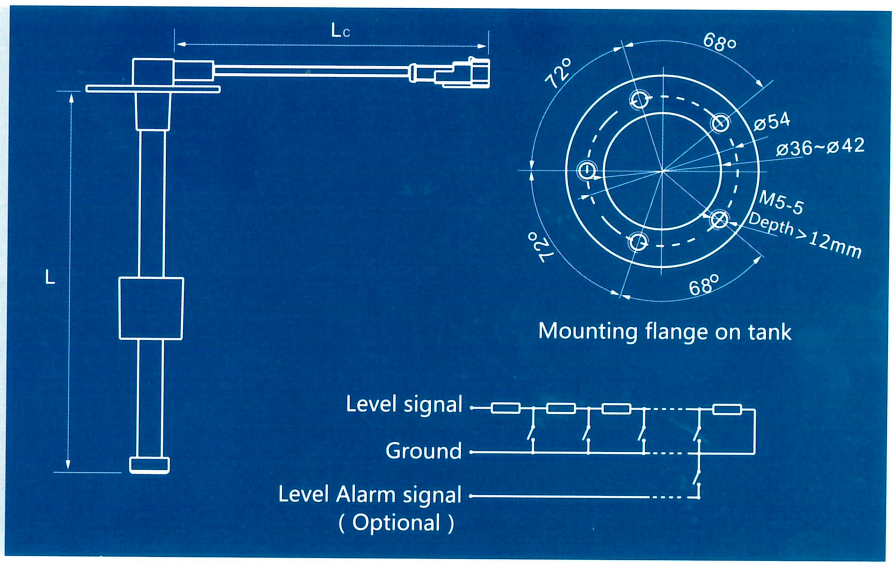

- Material: The main body is made of SS316 or SS304 stainless steel
- Length range:
  100 ~ 2000 mm. It also can be customized according to your requirements.
- Mounting:
  SAE standard 5 holes, other mounting methods available.
- Accessories:
  -5 x M5 screws
  -2 mm thick NBR gasket.
  If installing on a gas tank, we recommend the optional 2mm thick FPM gasket.
- Protection rank: IP67

- Utilizing magnetic field to control the reed on-off switch, the product features a long service life and protection against vibration.
- Rated power: 125mW
- Rated current for alarm switch: 500mA
- Wire: PVC material (PA corrugated pipe cover is optional)
- Connector: Delphi, Tyco, or others are available according to customer's requirements.
- Output signal:
  Resistance control signal, 0~190Ω , 240~33Ω, or customized as required; You can also choose current control signal, 0~20mA, 4~20mA or Voltage control signal, 0.5~4.5VDC, 0~5VDC.
- Resolution range: 10~40mm
- Operating temperature: -40℃ ~+85℃

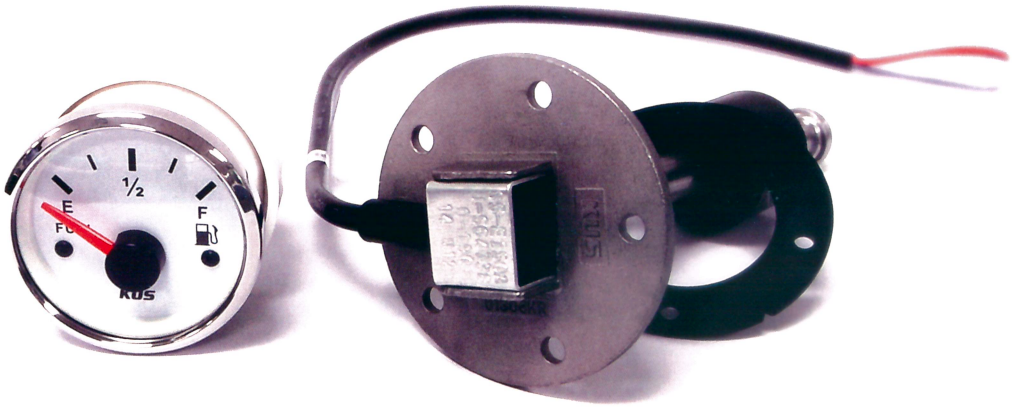

* Please contact us for more details.

INTERMODAL MATERIÉL
AND
NAUTICAL/NUCLEAR ANALYSIS
IMANNA
LABORATORY INC.

515 Gus Hipp Blvd.
Rockledge, Florida 32955-4810
Telephone (321) 632-2008
http://www.imanna.com

Post Office Box 560933
Rockledge, Florida 32956-0933
FAX (321) 690-3360
E-mail: imanna@yourlink.net

CERTIFICATION TEST REPORT

CERTIFICATION TEST REPORT 15871-1
OF
SSS & SSL FUEL/WATER LEVEL SENDERS
TO
MARINE APPLICATION REQUIREMENTS
FOR ISO/USCG/ABYC/NMMA

CUSTOMER:

WEMA-USA
15 N.E. 3rd STREET
FT. LAUDERDALE, FL 33301

MANUFACTURER OF TEST ARTICLE: WEMA-USA

DATE: SEPT 10, 2002

REPORT NO.: 15871-1
IMANNA JOB NO.: 15871
CUSTOMER P.O. NO.: LETTER
CONTRACT: N/A
PAGES IN REPORT: 18

STATE OF FLORIDA

ROBERT L. WHITE, being duly sworn, deposes and says: The information contained in this report is the result of complete and carefully conducted tests and is to the best of his knowledge true and correct in all respects.

Robert L. White

SUBSCRIBED and sworn to before me this 10th day of September, 2002

David H. Hudgins

NOTARY PUBLIC STATE OF FLORIDA
David H. Hudgins
Commission # DD 010632
Expires May 3, 2005
Bonded Thru
Atlantic Bonding Co., Inc.

Imanna shall have no liability for damages of any kind to person or property, including special or consequential damages resulting from Imanna's providing the service covered by the report.

IMANNA LABORATORY, Inc.
TEST BY

Robert L. White
PROJ. ENGINEER

1. TEST ARTICLE

The test article is a fuel / water level sensor that operates by induction through a float cylinder sliding along a stainless steel tube, and sending a signal to a standard gauge. The sender operates from a nominal 12 VDC voltage source. The sender is a transducer that converts fuel / water level readings from an induction coil into movement on a gauge pointer. The device is intended for permanent installation in a fuel / water tank in a vertical application only. The units are referred to as WEMA-USA SSS, and SSL series sending units. The construction employs 316 stainless steel material.

2. REQUIREMENTS

The requirements of this effort are to perform the necessary functional tests to determine compliance of the units to the ISO 10088, ABYC H-24 and the USCG requirements stated in 33 CFR 183.590.

3. PROCEDURES

The test procedures employed in conductance of these tests are the ISO 10088 and the USCG Standard Test Procedure for fuel and electrical components installed on recreational boats. These procedures are the same procedures specified by the NMMA and ABYC for these tests.

4. TEST SEQUENCE

A. Receiving Inspection
B. Pressure Impulse Test
C. Shock Test
D. Ignition Protection Verification
E. Fire Test on Metal Fuel Tank
F. Fire Test on Plastic Tank

5. TEST RESULTS

5A Receiving Inspection

Ten units were received for tests. Each unit was inspected for manufacturing completeness and proper function upon receipt. Each sender provided to the test lab was constructed of 316 stainless steel and had a nylon float cylinder. The float was free to move up and down the rod as the level of liquid varies. The mounting bolt pattern matched the pattern for other marine fuel senders. The electrical conductors were secured in the cap of the sender. The conductors extended to a point where terminals or splices could be used to continue the conductor run and termination.

5B Pressure Impulse Test

Two of the senders which were received were installed in fuel tanks and the tanks were subjected to 25,000 cycles of pressure impulse testing in accordance with the test procedure. The pressure in the tank was cycled from zero to 3 PSIG and back to zero for each cycle. The senders completed the tests with no leakage being observed in either sender or its mounting interface. Separate tests were conducted using metal and non-metal tanks as the non-metal tanks usually flex more than metal tanks. The results of the tests indicate that the senders meet the Pressure Impulse test requirements of the applied standards.

5C Shock Test

Two of the senders which were received were installed in fuel tanks and the tanks were subjected to 1,000 cycles of shock impact testing in accordance with the test procedure (25Gs peak acceleration). The senders completed the tests with no leakage being observed in the sender or its mounting interface. Separate tests were conducted using non-metal and metal tanks as the metal tanks usually impart a higher energy to the top mounted components on the tank during shock impacts. The results of the tests indicate that the senders meet the Pressure Impulse test requirements of the applied standards.

5D Ignition Protection Verification

One of the received senders was installed in a test chamber filled with an explosive atmosphere and cycled 50 times (full – empty – full) without causing the explosive atmosphere to ignite. The entire sender (outside tank surface and inside tank surface areas) were exposed to the explosive environment.

Following the explosive atmosphere exposure test, a pull test was performed on the electrical connectors and wires that are mounted in the senders cap. This pull test was intended to verify the integrity of the electrical connector interface in the molded cap. During the pull test the wire breaking strength proved to be less than the attachment connection; thereby satisfying the requirement for solid connection.

5E Fire Test on Metal Fuel Tanks

Three sending units were mounted in an Aluminum Fuel Tank and the entire assembly subjected to a 2½ minute fire test in accordance with the test procedures. The sender completed the test with no leakage being observed in the sender or its mounting interface following the fire conducted in an NMMA general installation fixture.

5F Fire Test on Plastic Tank

Three sending units were mounted in a High Density Polyethylene Fuel Tank and the entire assembly subjected to a 2 ½ minute fire test in accordance with the test procedures. The sender completed the test with no leakage being observed in the sender or its mounting interface following the fire conducted in an NMMA general installation fixture.

6. OBSERVATIONS AND COMMENTS

The results of the tests indicate that the received sender units meet the requirements for fuel system components as stated by the USCG, the NMMA, ISO and ABYC for fuel level senders mounted in permanently installed fuel tanks on recreational boats.

The test results reported herein apply only to the test articles as prepared and as tested. Test equipment used in the performance of this test program was calibrated to standards traceable to the NIST. Data supporting the results stated herein are appended.