Department of Environmental Protection

2600 Blair Stone Road ♦ Tallahassee, Florida 32399-2400

DEP Form: 62-762.901(9)
Form Title: Storage Tank Equipment Registration Form
Effective Date: July 2019
Incorporated in Rule 62-762.851, F.A.C.

Storage Tank System Equipment Registration Form

Fill out completely

General Information

Company Name: Clay and Bailey Mfg. Co.
Contact Name: Boris Bajic
Company Address: 6401 E. 40th Street
City, State: Kansas City Zip: 64129
E-mail: bbajic@claybailey.com
Contact Number: 816-924-3900
Product Name: 1228 Overfill Protection Valve with Testable Option
Model Number(s): 1228-03-35XXT or 1228-17-35XXT
Product Type: Overfill Protection Devices
Rule(s) citation that registration is being requested within Chapter 62-761 (UST), and/or 62-762 (AST), F.A.C.: 62-762.501 (2)(e), F.A.C.

Write a brief description of equipment registration request including product limitations:

The Clay & Bailey Overfill Protection Valve 1228-03-35XXT or 1228-17-35XXT, UL File No. MH25085 Overfill Protection Devices for storage tank systems is utilized in the pressurized fill connection and gravity fill applications. The valve prevents tank overfills by shutting off when the liquid level reaches predetermined level at 90 to 95% of tank capacity. The valve eliminates hazardous liquid spills when installed in accordance with manufacturer's installation instructions.

Information Checklist (Choose Yes, No, or N/A - Not Applicable):

		Yes	No	N/A
1.	Third-party Certification by a Nationally Recognized Testing Laboratory? (Required)	✔		
2.	Documentation of third-party evaluation that the equipment meets DEP Rules?	✔		
3.	Documents included about the qualifications of the Nationally Recognized Testing Laboratory?	✔		
4.	Technical information and drawings included?	✔		
5.	Installation instructions included?	✔		
6.	Annual Operability Testing Requirements (Rules 62-761.500, 62-762.501, & 62-762.502 F.A.C.)?	✔		
7.	Integrity Testing Requirements (Rules 62-761.700, 62-762.701, & 62-762.702, F.A.C.)?		✔	
8.	Compatible with fuel blends containing >10% ethanol or >20% biodiesel?	✔		
9.	Has the product been approved or registered in other countries or states? (If so provide list)	✔		
10.	Any requirements for company-certified installers or trainers?		✔	
11.	Was this product(s) previously approved or registered by the Department? If yes, EQ- 888	✔		
12.	Any changes or modifications to the equipment since the last submittal to DEP?		✔	

Document Information: Provide supporting documents indicated as "Yes" above including this form via email to Tanknotify@floridadep.gov, or documents can be sent to FDEP, Division of Waste Management, 2600 Blair Stone Road, MS 4560, Tallahassee, FL 32399.

Write a brief description of equipment installation and performance in the U.S.:

The Clay & Bailey Overfill Protection Valve 1228-03-35XXT or 1228-17-35XXT, UL File No. MH25085 Overfill Protection Devices for storage tank systems must be installed and tested in accordance with Installation Instruction prior to being placed into service and recorded in accordance with Rule 62-762.711, F.A.C, requirements.

Equipment Registration Certification:

To the best of my knowledge and belief, all information submitted on this form is true, accurate and complete.

Boris Bajic, Engineering Manager — Printed Name and Title
Boris Bajic — Signature (right click to sign)
02/02/2023 — Date

For Department Use Only:

Date Application Received: 02/02/2023 Application complete: Yes: ☐ No: ☐

EQ- 888 Date of complete or incomplete letter sent: 02/09/2023 Date Equipment Requires Renewal: 02/09/2028

Storage tank system equipment requires renewal every 5 years in accordance with subsection 62-762.851(2), F.A.C.

DEP Form 62-762.901(9) Information Checklist Additional Information:

Item number:

1. The Clay & Bailey Overfill Protection Valve 01228-03-35XX or 01228-17-35XX (3x4 OPV) Series, UL File No. MH25085. Please see attached UL Certificate.

2. UL evaluation documentation is proprietary. 3x4 Overfill Prevention Valve (OPV) is UL and ULC listed as shown on the attached Certifications Directory and UL Certificate of Compliance.

3. UL is nationally and internationally recognized testing laboratory that provides safety-related certification, validation, testing, inspection, auditing, advising and training services to a wide range of clients, including manufacturers, retailers, policymakers, etc. More information can be found on UL's website: www.ul.com

4. Drawings and technical information are included.

5. Installation instructions are included; Installation Instruction for 01228-03 (or 17)-20XX, 35XX, 60XX Series 2x4, 3x4 and 4x6 OPVs.

6. Annual Operability Testing of OPV is performed via test mechanism with stainless steel wire rope that meets MIL specification and allows floating arm to be pulled to a shut off position to test the valve function.

7. Integrity testing for liquid tightness applies to piping connection and piping.

8. Nickel plated version is compatible with ethanol and biodisel.

9. 01228-03 (or 17)-35XX (3x4 OPV) Series is also approved in Canada, ULC.

CERTIFICATE OF COMPLIANCE

Certificate Number	20181101-MH25085
Report Reference	MH25085-20170517
Issue Date	2018-NOVEMBER-01
Issued to:	CLAY & BAILEY MFG CO 6401 E 40Th St, Kansas City MO 64129-1711
This certificate confirms that representative samples of	TANK ACCESSORIES FOR FLAMMABLE AND COMBUSTIBLE LIQUIDS USL - Overfill Prevention Devices, Models: 1228-03-2200, 1228-03-2400, 2x4 OP, 3x4 OP and 4x6 OP. USL, CNL – Automatic Pressure-filled type Overfill Protection Devices, Model: 01228-03-41XX, where XX represent the length of the drop tube. Maximum rated pressure of 50 psi and for use with Class 1 liquids. Have been investigated by UL in accordance with the Standard(s) indicated on this Certificate.
Standard(s) for Safety:	UL2583, Fuel Tank Accessories
Additional Information:	See the UL Online Certifications Directory at https://iq.ulprospector.com for additional information.

This *Certificate of Compliance* does not provide authorization to apply the UL Mark.

Only those products bearing the UL Mark should be considered as being UL Certified and covered under UL's Follow-Up Services.

Look for the UL Certification Mark on the product.

Bruce Mahrenholz, Director North American Certification Program

UL LLC

Any information and documentation involving UL Mark services are provided on behalf of UL LLC (UL) or any authorized licensee of UL. For questions, please contact a local UL Customer Service Representative at http://ul.com/aboutul/locations/

EGVV.MH25085 - Tank Accessories for Flammable and Combustible Liquids

Tank Accessories for Flammable and Combustible Liquids

CLAY & BAILEY MFG CO
6401 E 40Th St
Kansas City, MO 64129-1711 United States

MH25085

Automatic Pressure-filled type Overfill Protection Devices Model(s) 01228-03-41XX @

Emergency vents Model(s) 0367-09-3000 (a), 0367-09-4000 (a), 0367-09-5000 (a), 0367-09-6000 (a), 354-02-2000 (a), 365-03-3000 (a), 366-03-30HF (a), 366-03-4000 (a), 366-03-40HF (a), 366-03-5000 (a), 366-03-50HF (a), 366-03-6000 (a), 366-03-60HF (a), 366-03-80HF (a), 367-03-30HF (a), 367-03-4000 (a), 367-03-40HF (a), 367-03-5000 (a), 367-03-50HF (a), 367-03-6000 (a), 367-03-60HDF (a), 367-03-80HF (a), 368-01-4000 (a), 368-01-6000 (a), 368-01-8000 (a), 368-03-4000 (a), 368-03-6000 (a), 368-03-8000 (a), 369-01-4000 (a), 369-01-6000 (a), 369-01-8000 (a), 369-03-4000 (a), 369-03-6000 (a), 369-03-8000 (a), 370-01-8000 (a), 370-03-1000 (a), 370-03-10HF (a), 370-03-60HF (a), 370-03-8000 (a), 370-03-80HF (a)

Overfill prevention devices Model(s) 1228-03-2200, 2x4 OP, 3x4 OP, 4x6 OP

Pressure vacuum vents Model(s) 0089-03-4885

Spill containers Model(s) 3.5 gallon capacity cylindrical., 5 gallon capacity cylindrical., 5 gallon capacity rectangular., 7.5 gallon capacity cylindrical.

(a) - For use on Aboveground Tanks for Flammable and Combustible Liquids.

@ - where XX represent the length of the drop tube. Maximum rated pressure of 50 psi and for use with Class 1 liquids.

Last Updated on 2021-03-31
Last Updated on 2021-03-31

The appearance of a company's name or product in this database does not in itself assure that products so identified have been manufactured under UL's Follow-Up Service. Only those products bearing the UL Mark should be considered to be Certified and covered under UL's Follow-Up Service. Always look for the Mark on the product.

UL permits the reproduction of the material contained in the Online Certification Directory subject to the following conditions: 1. The Guide Information, Assemblies, Constructions, Designs, Systems, and/or Certifications (files) must be presented in their entirety and in a non-misleading manner, without any manipulation of the data (or drawings). 2. The statement "Reprinted from the Online Certifications Directory with permission from UL" must appear adjacent to the extracted material. In addition, the reprinted material must include a copyright notice in the following format: "© 2021 UL LLC"

REVISIONS			
REV	DESCRIPTION	DATE	APPROVED

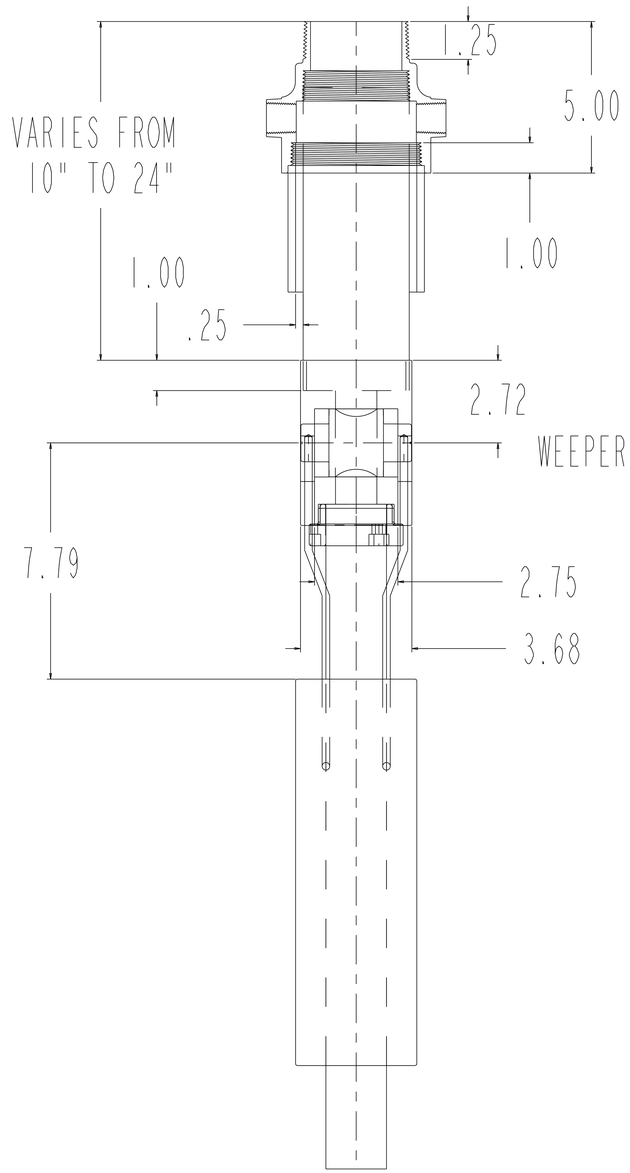

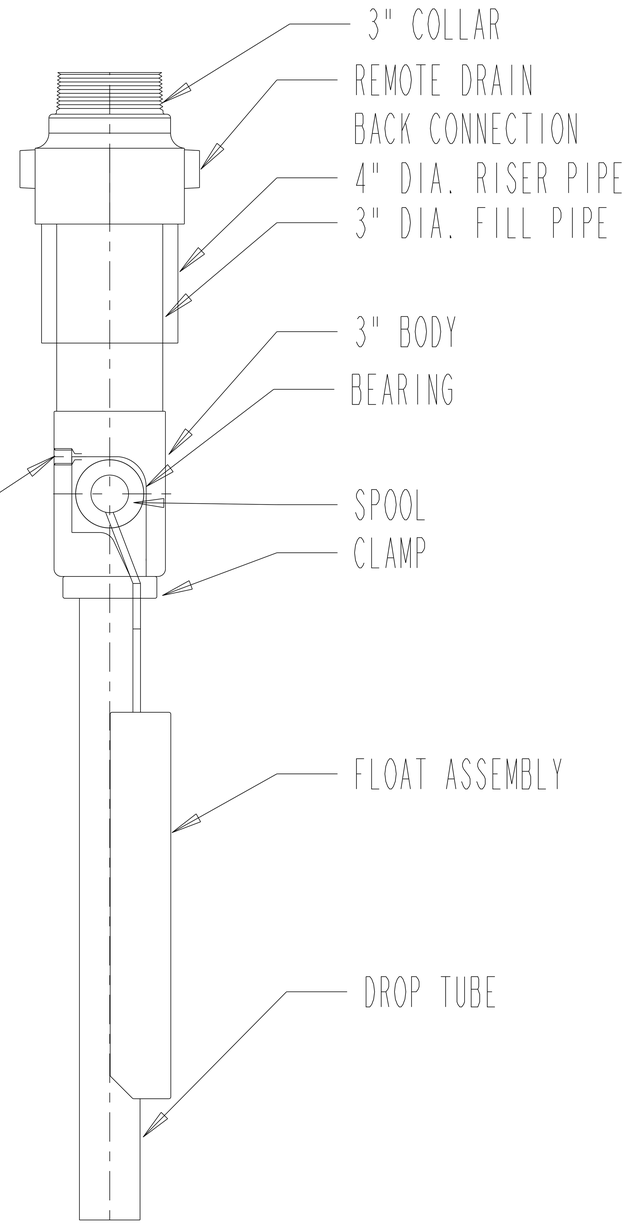

THIS DRAWING AND ALL CONCEPTS DISCLOSED THERON BELONG EXCLUSIVELY TO CLAY & BAILEY WHOSE PROPIETARY RIGHTS THEREIN SHALL BE APPROPRIATED IN WHOLE OR IN PART WITHOUT WRITTEN CONSENT.

CLAY & BAILEY MFG. CO.

3X 4 ASSEMBLY

SIZE	FSCM NO.	DWG NO. 1228-03-35XX	REV A
SCALE	DATE: 6/23/92	SHEET	

CAUTION!

READ THESE INSTRUCTIONS CAREFULLY AND COMPLETELY BEFORE OPERATING THIS DEVICE.

Before Filling:

1. Insure that the bypass valve on the tranport pump is working properly.
2. Do not exceed 100 psig delivery pressure.
3. Inspect delivery hose and fittings for wear and damage.
4. A dry break coupling or cam-lock type coupling is required for delivery.
5. After hooking up the delivery hose, visually inspect the connections.
6. If any leakage is discovered during or after delivery, discontinue use and repair or replace.

Warning Do Not Determine the Tank Level by Sticking the Gauge Stick or any Object Through the Fill Valve!!!This Will Damage the Valve and Prevent It from Operating Properly!!!

Filling and Disconnection Process:

1. Connect the delivery coupler to the fill adaptor.
2. Make sure isolation valve is completely closed.
3. Turn on the pump.
4. Slowly open the isolation valve.
5. Monitor the tank liquid level at all times during the fill.
6. Observe the delivery hose and connections, and listen to the pump for signs the valve has closed.
7. When shut off is detected, close the isolation valve and shut off the delivery pump.
8. Reopen the isolation valve for 5 minutes for pressure in the line to drop.

CAUTION!

ATTEMPTING TO DISCONNECT THE COUPLER WITH PRESSURE IN THE LINE COULD RESULT IN THE RELEASE OF PRODUCT!

9. Close the isolation valve and slowly disengage the delivery coupling and replace cap.

Warning Do Not Determine the Tank Level by Sticking the Gauge Stick or any Object Through the Fill Valve!!! This Will Damage the Valve and Prevent It from Operating Properly!!!

Clay & Bailey Mfg. Co.

1228 Series
Overfill Prevention Valve
Installation and Operation
Instructions and Procedures

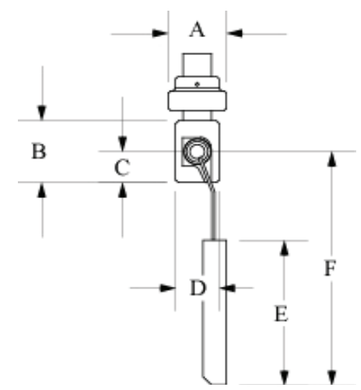

	A	B	C	D	E	F
1228-2" OP Valve	5.00"	5.50"	2.75"	3.67"	6.75"	15"
1228-4" OP Valve	7.43"	8.39"	3.75"	5.75"	9"	18.35"

1228-3" OP Valve dimensions are approximately the same as the 1228-2" OP Valve

Installation Instructions for Model 1228-2" X 4", 3" X 4"and 4"X 6" Overfill Prevention Valves

Warning! Do not pick up the valve by the float or the float rods. It could cause damage to the float and the valve not to operate properly!

1. Remove overfill prevention, (op), valve from packaging and inspection the valve for damage and check for the following:

Warning! Do not drop the op valve as this could cause damage to the valve making it unable to operate properly!

a. Inspect the float for damage such as breaks, cracks and float rods break outs.
b. Inspect the valve for cracks, breaks and damaged threads
If any of these are found and/ or if the valve has been dropped do not use and replace the valve.

2. A drop tube is required for the proper operation of the op valve. Install the drop tube using the following steps:

a. From the tank height/diameter and shut off height determine the required length of the drop tube. It should be 6" off the bottom of the tank and a 45 degree cut on the bottom of the drop tube.
b. After the drop tube is prepared, remove the clamp on the bottom of the op valve by turning counterclockwise.
c. Remove the plug from the clamp and slide the clamp onto the drop tube with the threaded end of the clamp toward the flanged end of the drop tube.
d. Place the drop tube in the bottom of op valve and thread the clamp into the op valve.

The next five steps apply to the 2" X 4" and 4" X 6" op valves with adjustable collars.

3. Using the distance from the top of the riser nipple to the shut off point inside the tank +2", measure from the valve centerline to a point on the fill tube and mark with a permanent marker.

Clay & Bailey Mfg. Co.
A CENTURY'S WORTH OF INNOVATION

4. Make sure the conduit nut is threaded onto the fill pipe, (this prevents accidentally dropping the valve into the tank). Hold the float against the drop tube and insert the entire unit, (drop tube first), through the opening into the tank.

5. Thread the adjustable collar onto the nipple and tighten hand tight only! Do not use a wrench on any part of the valve body! This will void the warranty.

6. Align the arrow on the fill pipe toward the centerline of the tank and away from the walls and/or other obstructions. **Warning! If the float is not aligned in a direction where it will have free movement from open to close, this device will fail to operate, over filling the tank will result!**

7. Raise or lower the fill pipe until the top of the adjustable collar is aligned with the mark made in step 3. Tighten the set screws.

The following steps are for op valves without adjustable collars:

8. Holding the float against the drop tube insert the entire unit, (drop tube first), through the opening into the tank.

9. Thread collar onto the nipple and tighten hand tight only! Rotate the collar to align the float in the tank toward the centerline of the tank away from the walls or other obstructions. **Warning! If the float is not aligned in a direction where it will have free movement from open to close, this device will fail to operate, over filling the tank will result!**

10. **Final installation step is to place one warning decal, (included with limiter), on the tank where it is readily visible**.

Operating Procedures:

DANGER

THE 1228 2", 3", AND 4" OP-SERIES VALVES ARE DESIGNED FOR LIQ0UID TIGHT FILL OPERATION AND MUST BE USED WITH PROPER CONNECTIONS. FAILURE TO PROPERLY CONNECT AND/OR DISCONNECT THE DELIVERY HOSE WILL PRESULT IN AN EXTREMELY DANGEROUS SITUATION!

6401 E. 40th St., Kansas City, Mo. 64129 • 1-800-821-6583 • F: 816-924-3903 • www.claybailey.com

TESTABLE OVERFILL PREVENTION VALVE

STI/SPFA New Product Winner!

AST Testable Overfill Prevention Valve

Clay and Bailey introduces an added safety feature to the industry's safest overfill prevention product line - a Testable Overfill Prevention Valve.

The unique test system allows for anyone to activate the float to a shut off position, providing verification that the Overfill Prevention Valve is functioning. The unique test system can be engaged before or at any time during the filling operation.

The unique test system incorporates a type 305 stainless steel wire rope that meets MIL specifications and has a breaking strength over 360 lbs.

The redesigned float significantly increases the GPM delivery rate.

The AST Testable Overfill Prevention Valve can be retrofitted to an existing AST and be used in direct fill or remote fill installations.

1228 Testable OP Valve

Part #	Size
1228-03-35XXT	3" x 4"

Options Include

1228-03-3054	3" Dust Cap

Clay and Bailey overfill prevention valves comply with various regulations such as NFPA, IFC, PEI/RP 600, and PEI/RP 200.

6401 E. 40th St. Kansas City, Missouri 64129

Clay and Bailey Mfg. Co.

1-816-924-3900 1-800-821-6583 FAX: 1-816-924-3903
www.claybailey.com email: CandBmfg@claybailey.com

OVERFILL PREVENTION VALVE

Clay & Bailey Mfg. Co. To:_____ **Fax:** _____

Overfill prevention Ordering Worksheet From: _____

ROUND HORIZONTAL TANK HEIGHT	% SHUT-OFF 90% HEIGHT	95% HEIGHT
36"	30"	33"
40"	34"	36"
42"	35"	38"
48"	41"	43"
60"	51"	54"
72"	61"	65"
84"	71	76"
96"	81"	87"
108"	91"	98"
120"	101"	109"

RECTANGULAR TANK HEIGHT	%SHUT-OFF 90% HEIGHT	95% HEIGHT
36"	32"	—
40"	36"	—
42"	38"	40"
48"	43"	46"
60"	54"	57"
72"	65"	68"
84"	77"	82"
96"	88"	93"
108"	97"	103"
120"	108"	114"

PLEASE COMPLETE THIS INFORMATION
USING DRAWINGS & CHARTS ON THIS PAGE
RECTANGULAR OR ROUND TANK? _____
VERTICAL OR HORIZONTAL? _____
LENGTH OF 4" MIPPLE FROM PRIMARY TANK?(2) _____
SHUT-OFF HEIGHT?(3) _____
HEIGHT OF SPILL CONTAINMENT BAX?(4) _____

OPTIONS:
INCLUDE DROP TUBE _____
INCLUDE DRY BRAEAK ADAPTOR _____
INCLUDE DRY BREAK COUPLER _____
INCLUDE DRY BREAK CAP _____
VITON GASKETS (BUNA-N STD.) _____

2", 3", AND 4" FILL LIMITERS' WORK SHEET FOR ALL PIPE LENGTH

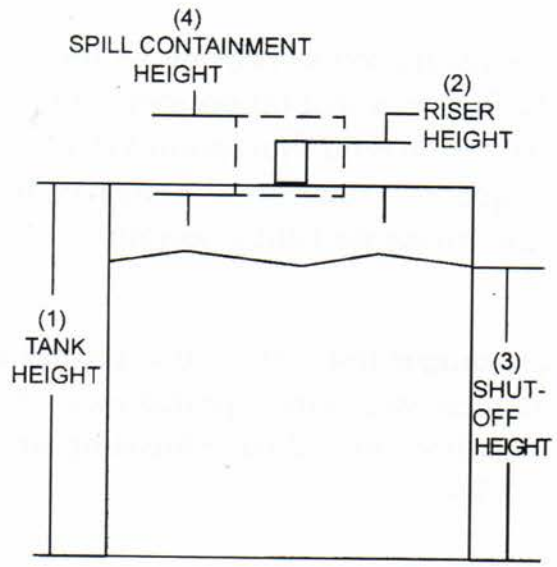

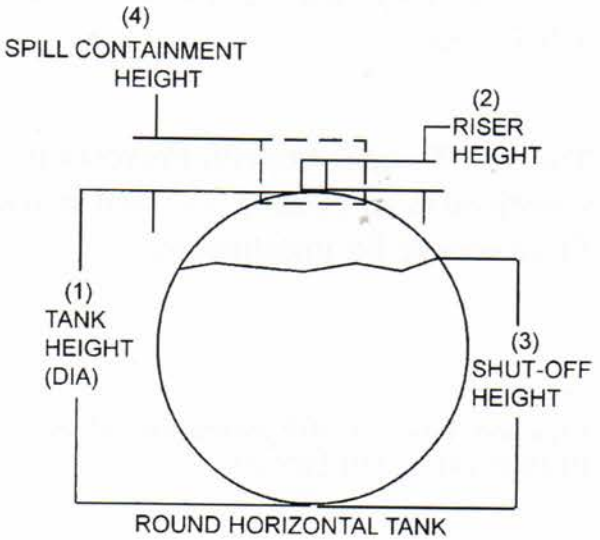

ROUND HORIZONTAL TANK

6401 E. 40th St. Kansas City, Missouri 64129

Clay and Bailey Mfg. Co.

1-816-924-3900 1-800-821-6583 FAX: 1-816-924-3903
www.claybailey.com email: CandBmfg@claybailey.com

Department of Environmental Protection

2600 Blair Stone Road ♦ Tallahassee, Florida 32399-2400

DEP Form: 62-762.901(9)
Form Title: Storage Tank Equipment Registration Form
Effective Date: January 2017
Incorporated in Rule 62-762.851, F.A.C.

Storage Tank Equipment Registration Form

Fill out completely

General Information

Company Name: Clay and Bailey Mfg. Co.
Contact Name: Brad Holmes
Company Address: 6401 E. 40th Street
City: Kansas City
Zip: 64129
E-mail: bholmes@claybailey.com
Contact Number: 800-821-6583
Product Name: 1228 Overfill Protection Valve with Testable option
Model Number(s): 1228-03-35XXT
Product Type: Overfill Protection Devices
Rule(s) citation within Chapter 62-761, or 62-762, F.A.C. that registration is being requested: 62-762.501 (2)(d), F.A.C.

Write a brief description of equipment registration request including product limitations:

The Clay & Bailey Overfill Protection Valve 1228-03-35XXT, UL File No. MH25085 Overfill Protection Devices for storage tank systems is utilized in the pressurized tight fill connection applications. The valve prevents tank overfills by shutting off when the liquid level reaches predetermined level at 90 to 95% of tank capacity. The valve eliminates hazardous liquid spills when installed in accordance with manufacturer's installation instructions.

Information Checklist

		Yes	No	N/A
1.	Third-party Certification by a Nationally Recognized Testing Laboratory?	✔		
2.	Documentation of third-party evaluation that the equipment meets DEP Rules?	✔		
3.	Documents included about the qualifications of the Nationally Recognized Testing Laboratory?	✔		
4.	Installation instructions included?	✔		
5.	Technical information and drawings included?	✔		
6.	Annual Operability Testing Requirements (Rules 62-761.700, 62-762.701, & 62-762.702 F.A.C.)?	✔		
7.	Compatible with fuel blends containing >10% ethanol or >20% biodiesel?		✔	
8.	Has the product been approved or registered in other countries or states? (If so provide list)	✔		
9.	Any requirements for company-certified installers or trainers?		✔	
10.	Was this product(s) previously approved or registered by the Department?	✔		
	If yes, please specify the Equipment Number: **EQ-** 257			
11.	Any changes or modifications to the equipment since the last submittal to DEP?		✔	

Document Information: Provide supporting documents indicated as "Yes" above including this form via email to Tanknotify@dep.state.fl.us, or documents can be sent to FDEP, Division of Waste Management, 2600 Blair Stone Road, MS 4560, Tallahassee, FL 32399.

Write a brief description of equipment installation and performance in the U.S.:

The Clay & Bailey Overfill Protection Valve 1228-03-35XXT, UL File No. MH25085 Overfill Protection Devices for storage tank systems must be installed and tested in accordance with Installation Instruction prior to being placed into service and recorded in accordance with Rule 62-762.711, F.A.C, requirements.

Equipment Registration Certification:

To the best of my knowledge and belief, all information submitted on this form is true, accurate and complete.

Brad Holmes, Sales Manager	Brad Holmes Digitally signed by Brad Holmes Date: 2018.02.07 10:06:16 -06'00'	2/7/2018
Printed Name and Title	Signature	Date

For Department Use Only:

Date Application Received: 2/7/2018 - Renew by 2/8/2023
Application complete: Yes: ✔ No: ☐

EQ- 888
Date of complete or incomplete letter sent: 2/8/2018
Date of entry to the DEP Equipment Registration List: 2/8/2018

DEP Form 62-762.901(9) Information Checklist Additional Information:

Item number:

1. The Clay & Bailey Overfill Protection Valves 1228 Series, UL File No. MH25085.

2. UL evaluation documentation is proprietary. Valve is UL listed as shown on the Online Certifications Directory below and attached UL Certificate of Compliance, however testable option is not UL listed.

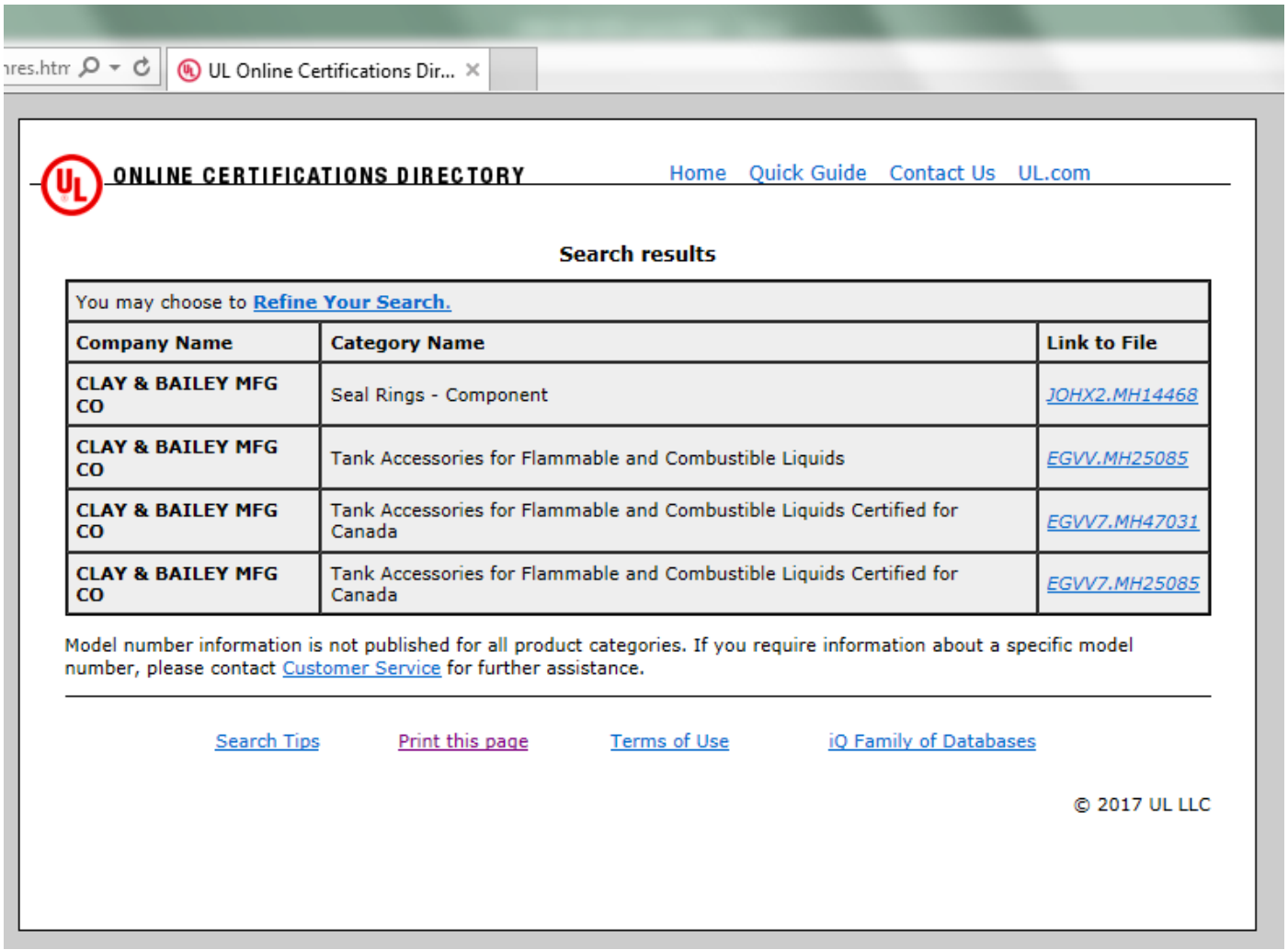

ONLINE CERTIFICATIONS DIRECTORY

Home Quick Guide Contact Us UL.com

Search results

You may choose to **Refine Your Search.**

Company Name	Category Name	Link to File
CLAY & BAILEY MFG CO	Seal Rings - Component	JOHX2.MH14468
CLAY & BAILEY MFG CO	Tank Accessories for Flammable and Combustible Liquids	EGVV.MH25085
CLAY & BAILEY MFG CO	Tank Accessories for Flammable and Combustible Liquids Certified for Canada	EGVV7.MH47031
CLAY & BAILEY MFG CO	Tank Accessories for Flammable and Combustible Liquids Certified for Canada	EGVV7.MH25085

Model number information is not published for all product categories. If you require information about a specific model number, please contact Customer Service for further assistance.

Search Tips Print this page Terms of Use iQ Family of Databases

© 2017 UL LLC

3. UL is nationally and internationally recognized testing laboratory that provides safety-related certification, validation, testing, inspection, auditing, advising and training services to a wide range of clients, including manufacturers, retailers, policymakers, etc. More information can be found on UL's website: www.ul.com

4. Installation instructions are included; Installation Instruction for 01228 Series 3"x4" OPV.

5. Drawings and technical information are included.

6. This model includes testable option with stainless steel wire rope that allows floating arm to be pulled to a shut off position to test the valve function and meet annual operability testing requirements.

8. Base model approved in Canada, ULC, however testable option is not listed.

10. Base model was previously covered under EQ-257.

11. No changes to models previously covered under EQ-257.
    This registration request is for 1228-03-35XXT Testable option. This model includes testable option with stainless steel wire rope that meets MIL specification and allows floating arm to be pulled to a shut off position to test the valve function.

01228 Series Overfill Prevention Valve Installation and Operation Instructions And Procedures

Revised by Scott Colley	Approved by
Position Engineer	Position
Date: November 16, 2017	Date:

REVISION LOG

Revision	Date	Revised Pages	Description of Revised Changes
0	Nov 2017	All	New Edition

1. OBJECTIVE.

The objective is to provide instructions for the installation and operation of certain model 1228 overfill prevention valves.

2. SCOPE.

The following instructions are only to be used with the 2”x4”, 3”x4”, and 4”x6” overfill prevention valves.

3. REFERENCE DOCUMENT.

N/A

4. RESPONSIBLE.

The Engineering Manager of **Clay & Bailey Mfg. Co.** is for upkeep and maintenance of this procedure.

5. ACTIVITY DESCRIPTION.

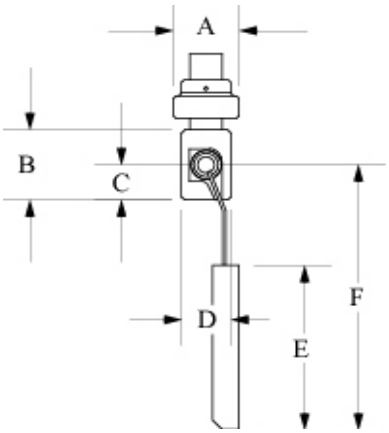

	A	B	C	D	E	F	
1228-2” OP	**5.00”**	**5.50”**	**2.75”**	**3.67”**	**6.75”**	**15”**	**Valve**
1228-4” OP	**7.43”**	**8.39”**	**3.75”**	**5.75”**	**9”**	**18.35”**	**Valve**

1228-3” OP Valve dimensions are approximately the same as the 1228-2” OP Valve

Installation Instructions for Model 1228-2" X 4", 3" X 4"and 4"X 6" Overfill Prevention Valves

Warning! Do not pick up the valve by the float or the float rods. It could cause damage to the float and the valve not to operate properly!

1. Remove overfill prevention (OP) valve from packaging and inspection the valve for damage and check for the following:

Warning! Do not drop the op valve as this could cause damage to the valve making it unable to operate properly!

a. Inspect the float for damage such as breaks, cracks and float rods break outs.
b. Inspect the valve for cracks, breaks and damaged threads

If any of these are found and/or if the valve has been dropped do not use and replace the valve.

2. A drop tube is required for the proper operation of the op valve. Install the drop tube using the following steps:

a. From the tank height/diameter and shut off height determine the required length of the drop tube. It should be 6" off the bottom of the tank and a 45-degree cut on the bottom of the drop tube.
b. After the drop tube is prepared, remove the clamp on the bottom of the op valve by turning counterclockwise.
c. Remove the plug from the clamp and slide the clamp onto the drop tube with the threaded end of the clamp toward the flanged end of the drop tube.
d. Place the drop tube in the bottom of op valve and thread the clamp into the op valve.

The next five steps apply to the 2" X 4" and 4" X 6" op valves with adjustable collars.

3. Using the distance from the top of the riser nipple to the shut off point inside the tank +2", measure from the valve centerline to a point on the fill tube and mark with a permanent marker.

4. Make sure the conduit nut is threaded onto the fill pipe, (this prevents accidentally dropping the valve into the tank). Hold the float against the drop tube and insert the entire unit, (drop tube first), through the opening into the tank.

5. Thread the adjustable collar onto the nipple and tighten hand tight only! Do not use a wrench on any part of the valve body! This will void the warranty.

6. Align the arrow on the fill pipe toward the centerline of the tank and away from the walls and/or other obstructions. **Warning! If the float is not aligned in a direction where it will have free movement from open to close, this device will fail to operate, over filling the tank will result!**

7. Raise or lower the fill pipe until the top of the adjustable collar is aligned with the mark made in step 3. Tighten the set screws.

The following steps are for OP valves without adjustable collars:

8. Holding the float against the drop tube insert the entire unit, (drop tube first), through the opening into the tank.

9. Thread collar onto the nipple and tighten hand tight only! Rotate the collar to align the float in the tank toward the centerline of the tank away from the walls or other obstructions. **Warning! If the float is not aligned in a direction where it will have free movement from open to close, this device will fail to operate, over filling the tank will result!**

10. **Final installation step is to place one warning decal, (included with limiter), on the tank where it is readily visible**.

Operating Procedures:

DANGER

THE 1228 2”, 3”, AND 4” OP-SERIES VALVES ARE DESIGNED FOR LIQ0UID TIGHT FILL OPERATION AND MUST BE USED WITH PROPER CONNECTIONS. FAILURE TO PROPERLY CONNECT AND/OR DISCONNECT THE DELIVERY HOSE WILL PRESULT IN AN EXTREMELY DANGEROUS SITUATION!

CAUTION!

READ THESE INSTRUCTIONS CAREFULLY AND COMPLETELY BEFORE OPERATING THIS DEVICE.

Before Filling:

1. Insure that the bypass valve on the tranport pump is working properly.
2. Do not exceed 100 psig delivery pressure.
3. Inspect delivery hose and fittings for wear and damage.

4. A dry break coupling or cam-lock type coupling is required for delivery.
5. After hooking up the delivery hose, visually inspect the connections.
6. If any leakage is discovered during or after delivery, discontinue use and repair or replace.

Warning Do Not Determine the Tank Level by Sticking the Gauge Stick or any Object Through the Fill Valve!!!
This Will Damage the Valve and Prevent It from Operating Properly!!!

Filling and Disconnection Process:

1. Connect the delivery coupler to the fill adaptor.
2. Make sure isolation valve is completely closed.
3. Turn on the pump.
4. Slowly open the isolation valve.
5. Monitor the tank liquid level at all times during the fill.
6. Observe the delivery hose and connections, and listen to the pump for signs the valve has closed.
7. When shut off is detected, close the isolation valve and shut off the delivery pump.
8. Reopen the isolation valve for 5 minutes for pressure in the line to drop.

CAUTION!

ATTEMPTING TO DISCONNECT THE COUPLER WITH PRESSURE IN THE LINE COULD RESULT IN THE RELEASE OF PRODUCT!

9. Close the isolation valve and slowly disengage the delivery coupling and replace cap.

Warning Do Not Determine the Tank Level by Sticking the Gauge Stick or any Object Through the Fill Valve!!!
This Will Damage the Valve and Prevent It from Operating Properly!!!

6. RECORDS.

N/A

7. ANNEXES.

N/A

TESTABLE OVERFILL PREVENTION VALVE

STI/SPFA New Product Winner!

AST Testable Overfill Prevention Valve

Clay and Bailey introduces an added safety feature to the industry's safest overfill prevention product line - a Testable Overfill Prevention Valve.

The unique test system allows for anyone to activate the float to a shut off position, providing verification that the Overfill Prevention Valve is functioning. The unique test system can be engaged before or at any time during the filling operation.

The unique test system incorporates a type 305 stainless steel wire rope that meets MIL specifications and has a breaking strength over 360 lbs.

The redesigned float significantly increases the GPM delivery rate.

The AST Testable Overfill Prevention Valve can be retrofitted to an existing AST and be used in direct fill or remote fill installations.

1228 Testable OP Valve

Part #	Size
1228-03-35XXT	3" x 4"

Options Include

1228-03-3054	3" Dust Cap

Clay and Bailey overfill prevention valves comply with various regulations such as NFPA, IFC, PEI/RP 600, and PEI/RP 200.

6401 E. 40th St. Kansas City, Missouri 64129

Clay and Bailey Mfg. Co.

1-816-924-3900 1-800-821-6583 FAX: 1-816-924-3903
www.claybailey.com email: CandBmfg@claybailey.com

OVERFILL PREVENTION VALVE

Clay & Bailey Mfg. Co. To:_____ **Fax:** _____

Overfill prevention Ordering Worksheet From: _____

ROUND HORIZONTAL TANK HEIGHT	% SHUT-OFF 90% HEIGHT	95% HEIGHT
36"	30"	33"
40"	34"	36"
42"	35"	38"
48"	41"	43"
60"	51"	54"
72"	61"	65"
84"	71	76"
96"	81"	87"
108"	91"	98"
120"	101"	109"

RECTANGULAR TANK HEIGHT	%SHUT-OFF 90% HEIGHT	95% HEIGHT
36"	32"	—
40"	36"	—
42"	38"	40"
48"	43"	46"
60"	54"	57"
72"	65"	68"
84"	77"	82"
96"	88"	93"
108"	97"	103"
120"	108"	114"

PLEASE COMPLETE THIS INFORMATION
USING DRAWINGS & CHARTS ON THIS PAGE
RECTANGULAR OR ROUND TANK? _____
VERTICAL OR HORIZONTAL? _____
LENGTH OF 4" MIPPLE FROM PRIMARY TANK?(2) _____
SHUT-OFF HEIGHT?(3) _____
HEIGHT OF SPILL CONTAINMENT BAX?(4) _____

OPTIONS:
INCLUDE DROP TUBE _____
INCLUDE DRY BRAEAK ADAPTOR _____
INCLUDE DRY BREAK COUPLER _____
INCLUDE DRY BREAK CAP _____
VITON GASKETS (BUNA-N STD.) _____

2", 3", AND 4" FILL LIMITERS' WORK SHEET FOR ALL PIPE LENGTH

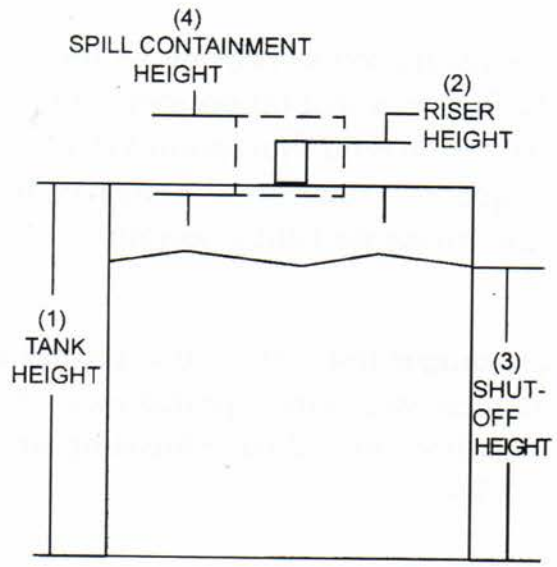

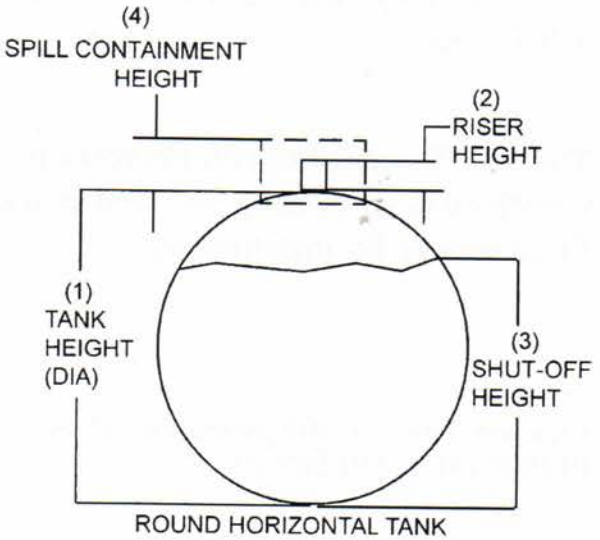

ROUND HORIZONTAL TANK

6401 E. 40th St. Kansas City, Missouri 64129

Clay and Bailey Mfg. Co.

1-816-924-3900 1-800-821-6583 FAX: 1-816-924-3903
www.claybailey.com email: CandBmfg@claybailey.com

REVISIONS			
REV	DESCRIPTION	DATE	APPROVED

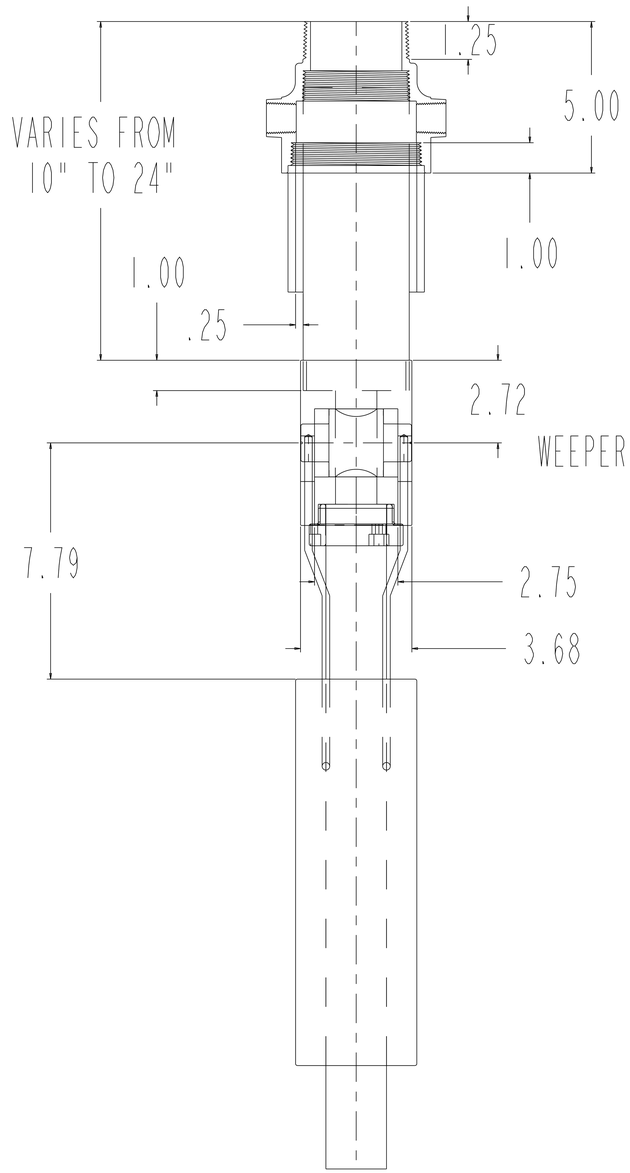

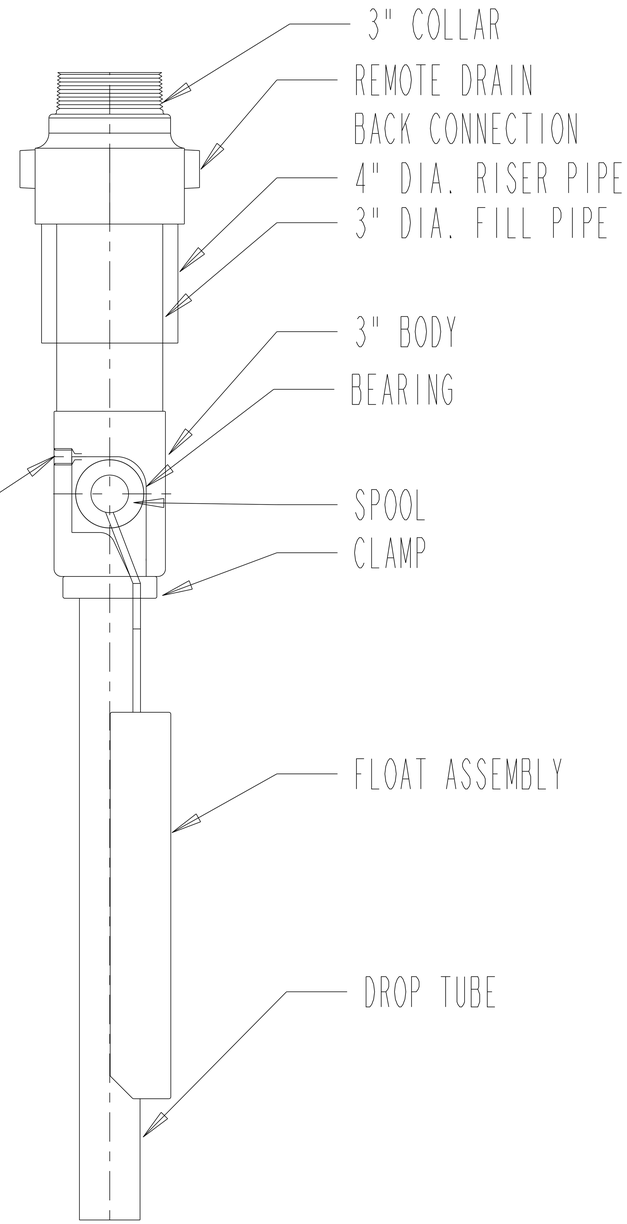

THIS DRAWING AND ALL CONCEPTS DISCLOSED THERON BELONG EXCLUSIVELY TO CLAY & BAILEY WHOSE PROPIETARY RIGHTS THEREIN SHALL BE APPROPRIATED IN WHOLE OR IN PART WITHOUT WRITTEN CONSENT.

CLAY & BAILEY MFG. CO.

3X 4 ASSEMBLY

SIZE	FSCM NO.	DWG NO. 1228-03-35XX	REV A
SCALE	DATE: 6/23/92	SHEET	

A	RECESSED & CENTERED	11/17/14	DRD

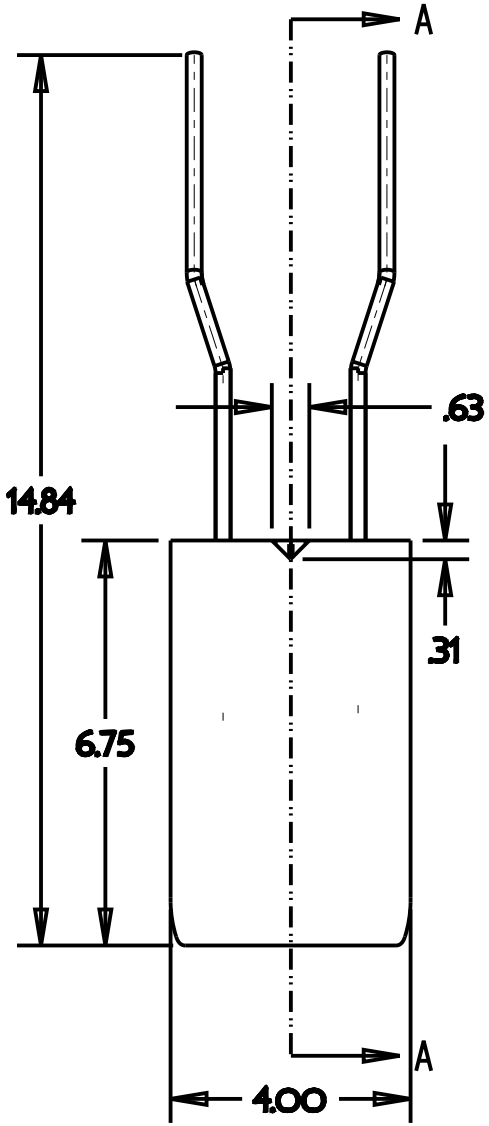

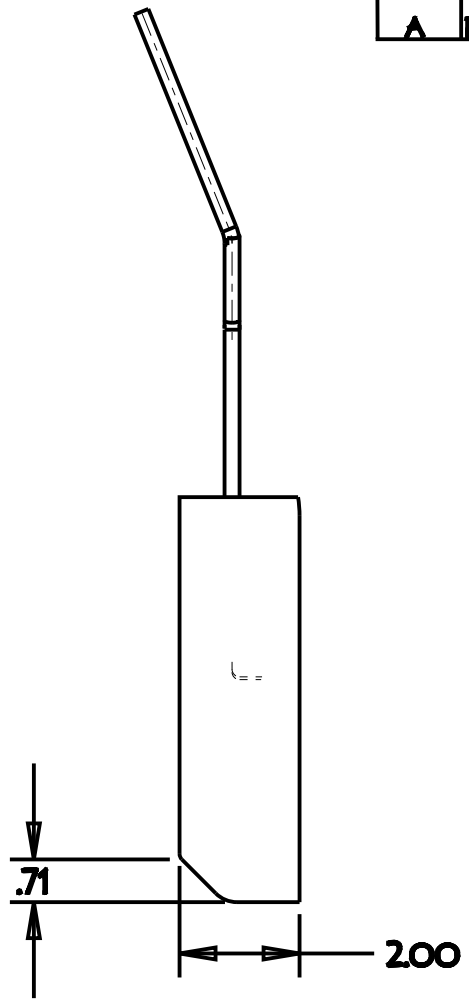

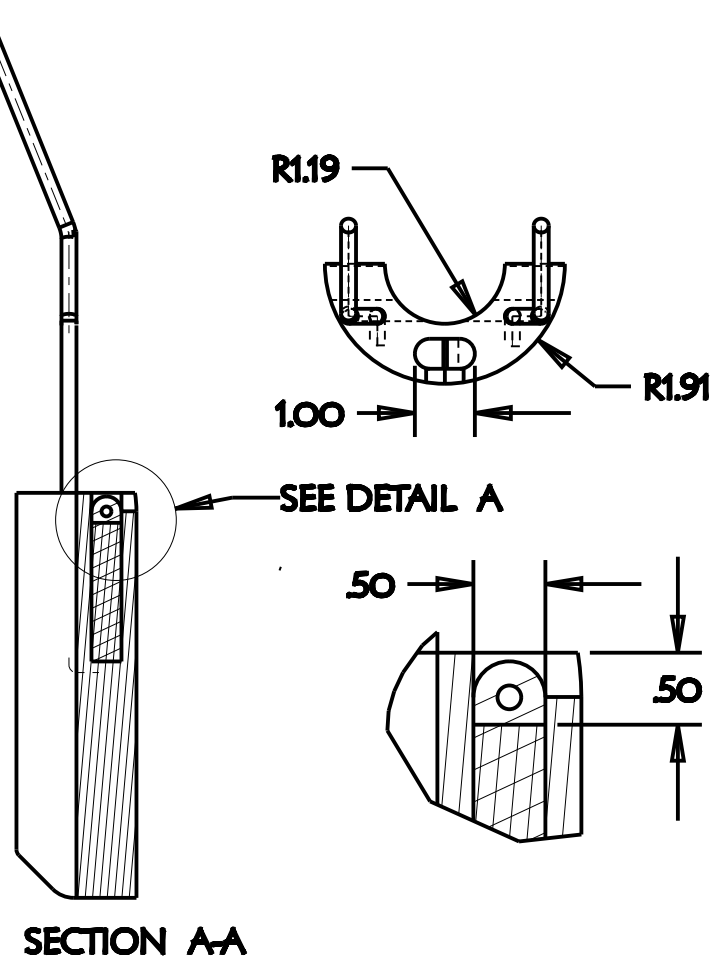

TOLERANCES	MATERIAL:	CLAY & BAILEY MFG. CO.
X +/-0.1 [illegible] XX +/-0.03 [illegible] XXX +/-0.010 [illegible] XXXX +/-0.0005 [illegible] ANGLES +/-0.5°	SST & POLYURETHANE	NAME: 2" SHORT O/P FLOAT W/ BRACKET FOR 2 X4 & 3 X 4 OP VALVES
	WT: TOTAL WEIGHT 0.6 LBS.	DRAWN BY: K.O. / DWG: 01228-13-5006ST / REV.
	SCALE:	APPROVED: / DATE: 08/29/14 / SHEET OF

THIS DRAWING AND CONCEPTS DISCLOSED THEREON BELONG EXCLUSIVELY TO CLAY & BAILEY WHOSE PROPRIETARY RIGHTS THEREIN SHALL NOT BE APPROPRIATED IN WHOLE OR IN PART WITHOUT WRITTEN CONSENT.

CERTIFICATE OF COMPLIANCE

Certificate Number 20170517-MH25085
Report Reference MH25085-20170517
Issue Date 2017-MAY-17

Issued to: CLAY & BAILEY MFG CO
6401 E 40Th St
Kansas City MO 64129-1711

This is to certify that representative samples of TANK ACCESSORIES FOR FLAMMABLE AND COMBUSTIBLE LIQUIDS
Overfill Prevention Devices, Models 1228-03-2200, 1228-03-2400, 2x4 OP, 3x4 OP and 4x6 OP

Have been investigated by UL in accordance with the Standard(s) indicated on this Certificate.

Standard(s) for Safety: UL2583, Outline of Investigation for Fuel Tank Accessories
Additional Information: See the UL Online Certifications Directory at www.ul.com/database for additional information

Only those products bearing the UL Certification Mark should be considered as being covered by UL's Certification and Follow-Up Service.

Look for the UL Certification Mark on the product.

Bruce Mahrenholz, Director North American Certification Program

UL LLC

Any information and documentation involving UL Mark services are provided on behalf of UL LLC (UL) or any authorized licensee of UL. For questions, please contact a local UL Customer Service Representative at http://ul.com/aboutul/locations/