Bozeman Engineering, Inc.

Houston, Tx

www.BozemanEngineering.com

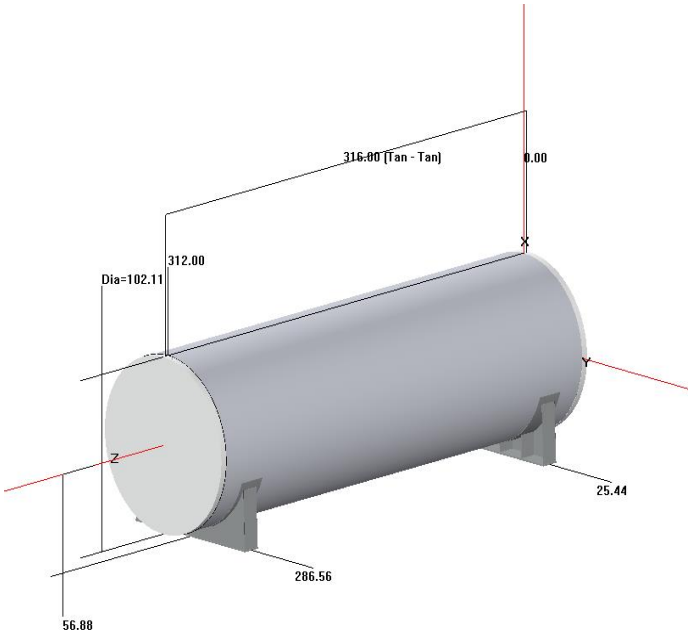

COMPRESS Pressure Vessel Design Calculations

Item: 10,000 Gal DW UL142 Saddle Tank

Vessel No:

Customer: JM Ellsworth

Fabricator: Certified Tank & Mfg., Inc.

Designer: R Bozman, PE

Date: 07/12/18

Rev A, Issue for Approval

Table of Contents

Pressure Summary.....1/15

Thickness Summary.....2/15

Weight Summary.....3/15

Wind Code.....4/15

Saddle #1.....5/15

Inner Tank.....14/15

Fuel Load (Liq Full @ SG = 0.6).....15/15

Pressure Summary

Component Summary					
Identifier	P Design (psi)	T Design (°F)	MDMT (°F)	MDMT Exemption	Impact Tested
Welded Cover #1	0.1	120	-155	Note 1	No
Straight Flange on Welded Cover #1	0.1	120	-155	Note 2	No
Shell	0.1	120	-155	Note 3	No
Straight Flange on Welded Cover #2	0.1	120	-155	Note 2	No
Welded Cover #2	0.1	120	-155	Note 1	No
Saddle #1	0.1	120	N/A	N/A	N/A

Chamber Summary	
Design MDMT	-20 °F
Rated MDMT	-155 °F @ 0.1 psi
MAWP hot & corroded	0.1 psi
MAEP	0.1 psi

Notes for Maximum Pressure Rating	
Note #	Details
1.	Option to calculate MAP was not selected. See the Calculation->General tab of the Set Mode dialog.
2.	Option to calculate MAWP was not selected. See the Calculation->General tab of the Set Mode dialog.
3.	Option to calculate MAEP was not selected. See the Calculation->General tab of the Set Mode dialog.

Notes for MDMT Rating		
Note #	Exemption	Details
1.	Head is impact test exempt to -155°F per UCS-66(b)(3) (coincident ratio = 0.1388)	
2.	Material is impact test exempt to -155°F per UCS-66(b)(3) (coincident ratio = 0.0012)	
3.	Material is impact test exempt to -155°F per UCS-66(b)(3) (coincident ratio = 0.0014)	

Thickness Summary

Component Data								
Component Identifier	Material	Diameter (in)	Length (in)	Nominal t (in)	Design t (in)	Total Corrosion (in)	Joint E	Load
Welded Cover #1	SA-36 (API 650 Allowable) (user defined)	101.75 ID	2.0543	0.1793	0.0668	0	1.00	Internal
Straight Flange on Welded Cover #1	SA-36 (API 650 Allowable) (user defined)	101.75 ID	2	0.1793	0.0771	0	1.00	External
Shell	SA-36 (API 650 Allowable) (user defined)	101.75 OD	312	0.1793	0.077	0	0.70	External
Straight Flange on Welded Cover #2	SA-36 (API 650 Allowable) (user defined)	101.75 ID	2	0.1793	0.0771	0	0.85	External
Welded Cover #2	SA-36 (API 650 Allowable) (user defined)	101.75 ID	2.0543	0.1793	0.0668	0	1.00	Internal

Definitions	
Nominal t	Vessel wall nominal thickness
Design t	Required vessel thickness due to governing loading + corrosion
Joint E	Longitudinal seam joint efficiency
Load	
Internal	Circumferential stress due to internal pressure governs
External	External pressure governs
Wind	Combined longitudinal stress of pressure + weight + wind governs
Seismic	Combined longitudinal stress of pressure + weight + seismic governs

Weight Summary

Weight (lb) Contributed by Vessel Elements											
Component	Metal New*	Metal Corroded	Insulation	Insulation Supports	Lining	Piping + Liquid	Operating Liquid		Test Liquid		Surface Area ft2
							New	Corroded	New	Corroded	
Welded Cover #1	464.7	464.7	0	0	0	0	0	0	0	0	66
Shell	5,051.7	5,051.7	0	0	0	0	0	0	0	0	693
Welded Cover #2	464.7	464.7	0	0	0	0	0	0	0	0	66
Saddle #1	1,248	1,248	0	0	0	0	0	0	0	0	104
TOTAL:	**7,229.1**	**7,229.1**	**0**	**0**	**0**	**0**	**0**	**0**	**0**	**0**	**929**

*Shells with attached nozzles have weight reduced by material cut out for opening.

Weight (lb) Contributed by Attachments										
Component	Body Flanges		Nozzles & Flanges		Packed Beds	Trays	Tray Supports	Rings & Clips	Vertical Loads	Surface Area ft2
	New	Corroded	New	Corroded						
Welded Cover #1	0	0	0	0	0	0	0	0	0	0
Shell	0	0	0	0	0	0	0	0	65,000*	0
Welded Cover #2	0	0	0	0	0	0	0	0	0	0
TOTAL:	**0**	**0**	**0**	**0**	**0**	**0**	**0**	**0**	**65,000***	**0**

*** This number includes vertical loads which are not present in all conditions.

Vessel Totals		
	New	Corroded
Operating Weight (lb)	72,229	72,229
Empty Weight (lb)	16,229	16,229
Test Weight (lb)	16,229	16,229
Surface Area (ft2)	929	-
Capacity** (US gal)	11,176	11,176

**The vessel capacity does not include volume of nozzle, piping or other attachments.

Vessel Lift Condition	
Vessel Lift Weight, New (lb)	16,229
Center of Gravity from Datum (in)	156.5485

Wind Code

Building Code: ASCE 7-10	
Elevation of base above grade	1.00 ft
Increase effective outer diameter by	1.00 ft
Wind Force Coefficient, Cf	0.5200
Risk Category (Table 1.5-1)	III
Basic Wind Speed, V	120.0000 mph
Exposure Category	C
Wind Directionality Factor, Kd	0.9500
Topographic Factor, Kzt	1.0000
Enforce minimum design load of 16 psf per ASCE 29.8:	Yes
Hazardous, toxic, or explosive contents	No

Wind Pressure (WP) Calculations

$Kz = 2.01 * (Z/z_g)^{2/\alpha}$
$= 2.01 * (15.00 / 900.00)^{0.2105}$
$= 0.8489$

$qz = 0.00256 * Kz * Kzt * Kd * V^2$
$= 0.00256 * 0.8489 * 1.0000 * 0.9500 * 120.0000^2$
$= 29.7286$ psf

$qz = 0.6 * \max[29.7286, 16.0000]$
$= 17.8372$ psf

Note: The 0.6 factor is the wind load combination factor from Section 2.4.1.

Table Lookup Values	
$\alpha = 9.5000$, $z_g = 900.00$ ft	[Table 26.9-1, page 256]

Shear calculations are reported in the saddle report.

Saddle #1

ASME Section VIII Division 1, 2010 Edition, A11 Addenda		
Saddle Material	SA-36	
Saddle Construction	Web at edge of rib	
Welded to Vessel	Yes	
Saddle Allowable Stress, S_s	24,000 psi	
Saddle Yield Stress, S_y	36,000 psi	
Foundation Allowable Stress	1,658 psi	
Design Pressure	**Left Saddle**	**Right Saddle**
Operating	0.1 psi	
Test	0.11 psi	
Vacuum	0.1 psi	
Dimensions		
Right saddle distance to datum	25.4375"	
Tangent To Tangent Length, L	316"	
Saddle separation, L_s	261.125"	
Vessel Radius, R	50.875"	
Tangent Distance Left, A_l	27.4375"	
Tangent Distance Right, A_r	27.4375"	
Saddle Height, H_s	56.875"	
Saddle Contact Angle, θ	130°	
Web Plate Thickness, t_s	0.25"	
Base Plate Length, E	96.1875"	
Base Plate Width, F	12"	
Base Plate Thickness, t_b	0.875"	
Number of Stiffening Ribs, n	6	
Largest Stiffening Rib Spacing, d_i	18.9875"	
Stiffening Rib Thickness, t_w	0.25"	
Saddle Width, b	11"	
Reinforcing Plate		
Thickness, t_p	0.25"	
Width, W_p	18"	
Contact Angle, θ_w	142°	
Bolting		

Material	A-307	
Bolt Allowable Shear	15,000 psi	
Description	1.375" coarse threaded	
Corrosion on root	0"	
Anchor Bolts per Saddle	4	
Base coefficient of friction, μ	0.25	
Weight		
	Operating, Corroded	**Hydrotest**
Weight on Left Saddle	35,311 lb	7,525 lb
Weight on Right Saddle	35,671 lb	7,456 lb
Weight of Saddle Pair	1,248 lb	

Notes
(1) Saddle calculations are based on the method presented in "Stresses in Large Cylindrical Pressure Vessels on Two Saddle Supports" by L.P. Zick.

Stress Summary										
Load	Condition	Saddle	Bending + pressure between saddles (psi)				Bending + pressure at the saddle (psi)			
			S_1 (+)	allow (+)	S_1 (-)	allow (-)	S_2 (+)	allow (+)	S_2 (-)	allow (-)
Wind	Operating	Right Saddle	1,410	27,840	1,396	6,373	-275	27,840	-289	6,373
		Left Saddle					-275	27,840	-289	6,373
	Test	Right Saddle	316	32,400	300	6,373	-45	32,400	-61	6,373
		Left Saddle					-45	32,400	-61	6,373
	Vacuum	Right Saddle	1,396	27,840	1,410	6,373	-289	27,840	-275	6,373
		Left Saddle					-289	27,840	-275	6,373
Weight	Operating	Right Saddle	1,363	23,200	1,349	5,311	-275	23,200	-289	5,311
		Left Saddle					-275	23,200	-289	5,311
	Vacuum	Right Saddle	1,349	23,200	1,363	5,311	-289	23,200	-275	5,311
		Left Saddle					-289	23,200	-275	5,311

Stress Summary											
Load	Condition	Saddle	Tangential shear (psi)		Circumferential stress (psi)			Stress over saddle (psi)		Splitting (psi)	
			S_3	allow	S_4 (horns)	S_4 (Wear plate)	allow (+/-)	S_5	allow	S_6	allow
Wind	Operating	Right Saddle	3,424	18,560	-11,824	-28,302	34,800	8,277	18,000	1,432	16,000
		Left Saddle	3,384	18,560	-11,709	-28,026	34,800	8,197	18,000	1,418	16,000
	Test	Right Saddle	731	25,920	-2,520	-6,031	32,400	1,764	32,400	305	32,400
		Left Saddle	739	25,920	-2,542	-6,084	32,400	1,779	32,400	308	32,400
	Vacuum	Right Saddle	3,424	18,560	-11,824	-28,302	34,800	8,277	18,000	1,432	16,000
		Left Saddle	3,384	18,560	-11,709	-28,026	34,800	8,197	18,000	1,418	16,000
Weight	Operating	Right Saddle	3,284	18,560	-11,425	-27,346	34,800	7,998	18,000	1,383	16,000
		Left Saddle	3,244	18,560	-11,310	-27,070	34,800	7,917	18,000	1,370	16,000
	Vacuum	Right Saddle	3,284	18,560	-11,425	-27,346	34,800	7,998	18,000	1,383	16,000
		Left Saddle	3,244	18,560	-11,310	-27,070	34,800	7,917	18,000	1,370	16,000

Saddle reactions due to weight + wind			
Wind longitudinal reaction, Q_l			
Wind transverse reaction, Q_t			
Wind pressure, P_w			17.8372 psf
Equations			
$V_{wt} = P_w*G*(C_{f(shell)}*(\text{Projected shell area}) + C_{f(saddle)}*(\text{Projected saddle area}))$			
$V_{we} = P_w*G*(C_{f(shell)}*\pi*R_o^2 / 144 + C_{f(saddle)}*(\text{Projected saddle area}))$			
$Q_t = V_{wt}*H_s / (R_o*Sin(\theta / 2))$			
$Q_l = V_{we}*H_s / L_s$			
$Q = W + max[Q_t , Q_l]$			
Results			
Operating	Right Saddle	$V_{wt} = 17.84*0.85*(0.52*126.4369 + 2*0.4583)$	1,010.73 lb_f
		$V_{we} = 17.84*0.85*(1.2*\pi*56.875^2 / 144 + 2*10.2192)$	1,593.85 lb_f
		$Q_t = 1,010.73*56.875 / (50.875*Sin(130 / 2))$	1,246.74 lb_f
		$Q_l = 1,593.85*56.875 / 261.125$	347.15 lb_f
		$Q = 35,671 + max[1,246.74 , 347.15]$	36,917.74 lb_f
	Left Saddle	$V_{wt} = 17.84*0.85*(0.52*126.4369 + 2*0.4583)$	1,010.73 lb_f
		$V_{we} = 17.84*0.85*(1.2*\pi*56.875^2 / 144 + 2*10.2192)$	1,593.85 lb_f
		$Q_t = 1,010.73*56.875 / (50.875*Sin(130 / 2))$	1,246.74 lb_f
		$Q_l = 1,593.85*56.875 / 261.125$	347.15 lb_f
		$Q = 35,311 + max[1,246.74 , 347.15]$	36,557.74 lb_f
Test	Right Saddle	$V_{wt} = 5.89*0.85*(0.52*126.4369 + 2*0.4583)$	333.54 lb_f
		$V_{we} = 5.89*0.85*(1.2*\pi*56.875^2 / 144 + 2*10.2192)$	525.97 lb_f
		$Q_t = 333.54*56.875 / (50.875*Sin(130 / 2))$	411.42 lb_f
		$Q_l = 525.97*56.875 / 261.125$	114.56 lb_f
		$Q = 7,456 + max[411.42 , 114.56]$	7,867.42 lb_f
	Left Saddle	$V_{wt} = 5.89*0.85*(0.52*126.4369 + 2*0.4583)$	333.54 lb_f
		$V_{we} = 5.89*0.85*(1.2*\pi*56.875^2 / 144 + 2*10.2192)$	525.97 lb_f
		$Q_t = 333.54*56.875 / (50.875*Sin(130 / 2))$	411.42 lb_f
		$Q_l = 525.97*56.875 / 261.125$	114.56 lb_f
		$Q = 7,525 + max[411.42 , 114.56]$	7,936.42 lb_f

Longitudinal stress between saddles (Weight, Vacuum, right saddle loading and geometry govern)

$S_1 = \pm 3*K_1*Q*(L / 12) / (\pi*R^2*t)$
$= 3*0.6954*35,671*(316 / 12) / (\pi*50.7854^2*0.1793)$
$= 1,349$ psi

$S_p = P*R / (2*t)$
$= 0.1*50.6957 / (2*0.1793)$
$= 14$ psi

Maximum tensile stress (shut down) $S_{1t} = S_1 = 1{,}349$ psi
Maximum compressive stress $S_{1c} = S_1 + S_p =$ 1,363 psi

Tensile stress is acceptable ($\leq S*E = 23{,}200$ psi)
Compressive stress is acceptable ($\leq S_c = 5{,}311$ psi)

Longitudinal stress at the right saddle (Weight, Operating)

$L_e = 2*(\text{Left head depth}) / 3 + L + 2*(\text{Right head depth}) / 3$
$= 2*2.0543 / 3 + 316 + 2*2.0543 / 3$
$= 318.7391$ in

$w = W_t / L_e = 70{,}982 / 318.7391 = 222.7\ lb_f/in$

Bending moment at the right saddle:

$M_q = w*(2*H*A_r / 3 + A_r^2 / 2 - (R^2 - H^2) / 4)$
$= 222.7*(2*2.0543*27.4375 / 3 + 27.4375^2 / 2 - (50.875^2 - 2.0543^2) / 4)$
$= -51{,}671.5\ lb_f\text{-in}$

$S_2 = \pm M_q*K_1' / (\pi*R^2*t)$
$= -51{,}671.5*8.1206 / (\pi*50.7854^2*0.1793)$
$= -289$ psi

$S_p = P*R / (2*t)$
$= 0.1*50.6957 / (2*0.1793)$
$= 14$ psi

Maximum tensile stress $S_{2t} = S_2 + S_p =$ -275 psi
Maximum compressive stress (shut down) $S_{2c} = S_2 = -289$ psi

Tensile stress is acceptable ($\leq S = 23{,}200$ psi)
Compressive stress is acceptable ($\leq S_c = 5{,}311$ psi)

Longitudinal stress at the right saddle (Weight, Vacuum)

$L_e = 2*(\text{Left head depth}) / 3 + L + 2*(\text{Right head depth}) / 3$
$= 2*2.0543 / 3 + 316 + 2*2.0543 / 3$
$= 318.7391$ in

$w = W_t / L_e = 70{,}982 / 318.7391 = 222.7\ lb_f/in$

Bending moment at the right saddle:

$M_q = w*(2*H*A_r / 3 + A_r^2 / 2 - (R^2 - H^2) / 4)$
$= 222.7*(2*2.0543*27.4375 / 3 + 27.4375^2 / 2 - (50.875^2 - 2.0543^2) / 4)$
$= -51{,}671.5\ lb_f\text{-in}$

$S_2 = \pm M_q*K_1' / (\pi*R^2*t)$
$= -51{,}671.5*8.1206 / (\pi*50.7854^2*0.1793)$
$= -289$ psi

$S_p = P*R / (2*t)$
$= 0.1*50.6957 / (2*0.1793)$
$= 14$ psi

Maximum tensile stress (shut down) $S_{2t} = S_2 = -289$ psi
Maximum compressive stress $S_{2c} = S_2 + S_p = -275$ psi

Tensile stress is acceptable ($\leq S = 23{,}200$ psi)
Compressive stress is acceptable ($\leq S_c = 5{,}311$ psi)

Tangential shear stress in the shell (right saddle, Wind, Operating)

$Q_{shear} = Q - w*(a + 2*H / 3)$
$= 36{,}917.74 - 222.7*(27.4375 + 2*2.0543 / 3)$
$= 30{,}502.52\ lb_f$

$S_3 = K_{2.2}*Q_{shear} / (R*t)$
$= 1.0222*30{,}502.52 / (50.7854*0.1793)$
$= 3{,}424$ psi

Tangential shear stress is acceptable ($\leq 0.8*S = 18{,}560$ psi)

Circumferential stress at the right saddle horns (Wind, Operating)

$S_4 = -Q / (4*(t+t_p)*(b+1.56*Sqr(R_o*t))) - 12*K_3*Q*R / (L*(t^2+t_p^2))$
$= -36{,}917.74 / (4*(0.1793+0.25)*(11+1.56*Sqr(50.875*0.1793))) - 12*0.0139*36{,}917.74*50.7854 / (316*(0.1793^2+0.25^2))$
$= -11{,}824$ psi

Circumferential stress at saddle horns is acceptable ($\leq 1.5*S_a = 34{,}800$ psi)

Circumferential stress at the right saddle wear plate horns (Wind, Operating)

$S_4 = -Q / (4*t*(b+1.56*Sqr(R_o*t))) - 12*K_3*Q*R / (L*t^2)$
$= -36{,}917.74 / (4*0.1793*(11+1.56*Sqr(50.875*0.1793))) - 12*0.0113*36{,}917.74*50.7854 / (316*0.1793^2)$
$= -28{,}302$ psi

Circumferential stress at wear plate horns is acceptable ($\leq 1.5*S_a = 34{,}800$ psi)

Ring compression in shell over right saddle (Wind, Operating)

$S_5 = K_5*Q / ((t + t_p)*(t_s + 1.56*Sqr(R_o*t_c)))$
$= 0.7258*36{,}917.74 / ((0.1793 + 0.25)*(0.25 + 1.56*Sqr(50.875*0.4293)))$
$= 8{,}277$ psi

Ring compression in shell is acceptable ($\leq 0.5*S_y = 18{,}000$ psi)

Saddle splitting load (right, Wind, Operating)

Area resisting splitting force = Web area + wear plate area

$A_e = H_{eff}*t_s + t_p*W_p$
$= 4.875*0.25 + 0.25*18$
$= 5.7188\ in^2$

$S_6 = K_8*Q / A_e$
$= 0.2218*36{,}917.74 / 5.7188$

= 1,432 psi

Stress in saddle is acceptable (≤ (2 / 3)*S_s = 16,000 psi)

Shear stress in anchor bolting, one end slotted

Maximum seismic or wind base shear = 1,593.85 lb_f

Thermal expansion base shear = W*μ = 36,295*0.25 = 9,073.75 lb_f
Corroded root area for a 1.375" coarse threaded bolt = 1.054 in^2 (4 per saddle)

Bolt shear stress = 9,073.75 / (1.054*1*4) = 2,152 psi

Anchor bolt stress is acceptable (≤ 15,000 psi)

Shear stress in anchor bolting, transverse

Maximum seismic or wind base shear = 2,021.46 lb_f
Corroded root area for a 1.375" coarse threaded bolt = 1.054 in^2 (4 per saddle)

Bolt shear stress = 2,021.46 / (1.054*2*4) = 240 psi

Anchor bolt stress is acceptable (≤ 15,000 psi)

Web plate buckling check (Escoe pg 251)

Allowable compressive stress S_c is the lesser of 24,000 or 5,816 psi: (5,816)

$S_c = K_i*\pi^2*E / (12*(1 - 0.3^2)*(d_i / t_s)^2)$
$= 1.28*\pi^2*29E+06 / (12*(1 - 0.3^2)*(18.9875 / 0.25)^2)$
= 5,816 psi

Allowable compressive load on the saddle

$b_e = d_i*t_s / (d_i*t_s + 2*t_w*(b - 1))$
= 18.9875*0.25 / (18.9875*0.25 + 2*0.25*(11 - 1))
= 0.487

$F_b = n*(A_s + 2*b_e*t_s)*S_c$
= 6*(2.6875 + 2*0.487*0.25)*5,816
= 102,281.64 lb_f

Saddle loading of 37,541.74 lb_f is ≤ F_b; satisfactory.

Primary bending + axial stress in the saddle due to end loads (assumes one saddle slotted)
$\sigma_b = V*(H_s - x_o)*y / I + Q / A$
= 1,593.85*(56.875 - 40.6433)*6.4954 / 254.67 + 36,917.74 / 39.1792
= 1,602 psi

The primary bending + axial stress in the saddle ≤ S_s = 24,000 psi; satisfactory.

Secondary bending + axial stress in the saddle due to end loads (includes thermal expansion, assumes one saddle slotted)
$\sigma_b = V*(H_s - x_o)*y / I + Q / A$
= 10,667.6*(56.875 - 40.6433)*6.4954 / 254.67 + 36,917.74 / 39.1792
= 5,359 psi

The secondary bending + axial stress in the saddle ≤ $2*S_y$ = 72,000 psi; satisfactory.

Saddle base plate thickness check (Roark sixth edition, Table 26, case 7a)

where a = 18.9875, b = 11.75 in

$t_b = (\beta_1*q*b^2 / (1.5*S_a))^{0.5}$
$= (1.4031*33*11.75^2 / (1.5*24{,}000))^{0.5}$
= 0.4184 in

The base plate thickness of 0.875 in is adequate.

Foundation bearing check

$S_f = Q_{max} / (F*E)$
= 37,541.74 / (12*96.1875)
= 33 psi

Concrete bearing stress ≤ 1,658 psi ; satisfactory.

ASME Section VIII Division 1, 2010 Edition, A11 Addenda	
Inputs	
Load Orientation	Vertical Load
Position from datum	157"
Direction Angle	0.00°
Magnitude of Force	9,000 lb
Loading Conditions	
Present When Operating	Yes
Included in Vessel Lift Weight	Yes
Present When Vessel is Empty	Yes
Present During Test	Yes

Fuel Load (Liq Full @ SG = 0.6)

ASME Section VIII Division 1, 2010 Edition, A11 Addenda	
Inputs	
Load Orientation	Vertical Load
Position from datum	155"
Direction Angle	0.00°
Magnitude of Force	56,000 lb
Loading Conditions	
Present When Operating	Yes
Included in Vessel Lift Weight	No
Present When Vessel is Empty	No
Present During Test	No

U.S. Army Corps of Engineers (USACE)
TRANSMITTAL OF SHOP DRAWINGS, EQUIPMENT DATA, MATERIAL SAMPLES, OR MANUFACTURER'S CERTIFICATES OF COMPLIANCE
For use of this for, see ER 415-1-10; the proponent agency is CECW-CE

DATE: 12/17/2018

TRANSMITTAL NO.: 023B

SECTION 1 - REQUEST FOR APPROVAL OF THE FOLLOWING ITEMS ***(This section will be initiated by the contractor)***

TO: **LT Matt Harley**
NAVFAC SOUTHEAST
PWD MAY PORT
BLDG 1966, PO BOX 280073
MAY PORT F L 32228-0073

FROM: **Sweat, LLC**
2401 Executive Plaza Ste 7B
Pensacola, FL 32504

CONTRACT NO.: **N69450-16-D-5627-2671**

CHECK ONE:
☐ THIS IS A NEW TRANSMITTAL
☒ THIS IS A RESUBMITTAL OF TRANSMITTAL 023A

SPECIFICATION SPEC. NO. (Cover only one section): 01310

PROJECT TITLE AND LOCATION: arious Fuel Dispensing & Safety Improvements / MCSF Blount Islar

THIS TRANSMITTAL IS FOR: (Check one) ☐ FIO ☒ GA ☐ DA ☐ CR ☐ DA/CR ☐ DA/GA

ITEM NO. (See Note 3) a.	DESCRIPTION OF SUBMITTAL ITEM (Type size, model number/etc.) b.	SUBMITTAL TYPE CODE (See Note 8) c.	NO. OF COPIES d.	CONTRACT DOCUMENT REFERENCE: SPEC. PARA. NO. e.	CONTRACT DOCUMENT REFERENCE: DRAWING SHEET NO. f.	CONTRACTOR REVIEW CODE g.	VARIATION Enter "Y" if requesting a variation (See Note 6) h.	GOVT ACTION CODE (Note 9) i.
1	E85 Tank and Platform	02	1 (Elec)	SOW	-	A	No	

REMARKS

I certify that the above submitted items had been reviewed in detail and are correct and in strict conformance with the contract drawings and specifications except as otherwise stated.

Mike Charles
NAME OF CONTRACTOR

Michael Charles
SIGNATURE OF CONTRACTOR

SECTION II - APPROVAL ACTION

ENCLOSURES RETURNED *(by item No.)*	NAME AND TITLE OF APPROVING AUTHORITY	SIGNATURE OF APPROVING AUTHORITY	DATE

SUBMITTAL

SPECIFICATION SECTION & PARAGRAPH

SPEC SECTION: 01310 **SPEC PARAGRAPH #** SOW

SPEC TITLE: Administrative Requirements

SUBMITTAL DESCRIPTION (SD) Shop Drawing **SD #** SD-02

ACTION CODE: G

E85 Tank & Platform Shop Drawing REV

Submitted to:

NAVFAC SE PWD Mayport

Project No.: 5627-2671
Contract No. N69450-16-D-5627-2671

Submitted by:

I hereby certify that the ☐ Equipment ☒ Material ☐ Article shown and marked in this submittal is that proposed to be incorporated with assigned Contract Number, **N69450-16-D-5627-2671,** is in compliance with the contract drawings and specification, can be installed in the allocated spaces, and is submitted for **Government approval.**

Certified by Submittal Reviewer _____ **Date:** _____
(Signature when applicable)

Certified by QC Manager Michael Charles **Date:** 12/14/18
(Signature)

SHOP DRAWING REVIEW COMMENTS

Various Fuel Dispensing and Safety Improvements
Marine Corps Support Facility, Blount Island, Florida

ROBERT AND COMPANY
RAC JOB NO. 13016-80

Contract Number:	N69450-16-D-5627-2671
Transmittal Number:	023A
Transmittal Name:	E85 Tank and Platform
Specification Section:	01310
Reviewed By:	Marlon Souprayen, Mechanical Designer Hasan Daysal, PE, SE
Date:	October 5, 2018
Recommendation:	Revise and Resubmit

Comments: Comments 1, 2 and 4 were not addressed in the resubmitted drawings

1) Please provide nozzle extension as shown on attached drawing for easy acces to equipment on top of the tank. All fueling piping shall be running on top of the platform.
2) Please provide striker plates in 7 locations, see attached drawing. Provide below the following nozzles: The 4" ATG, 6" Tank Fill, 4" Pump, 2" Gauge, 2" Level Alarm, 4" Sampling Gauge and 2" Water drain.
3) Tank appears to be sloping down in the wrong direction. Tank should be sloping downwards towards the end with the water drain nozzle.
4) Provide flanged nozzles for the 4" ATG, 4" Pump, 3" PV Vent, 4" Sampling Gauge and 2" Water Drain.

SWEAT LLC RESPONSE:

1. Added
2. Added
3. Corrected
4. Flanged Nozzles will be provided.

REVISED DRAWINGS FOLLOW

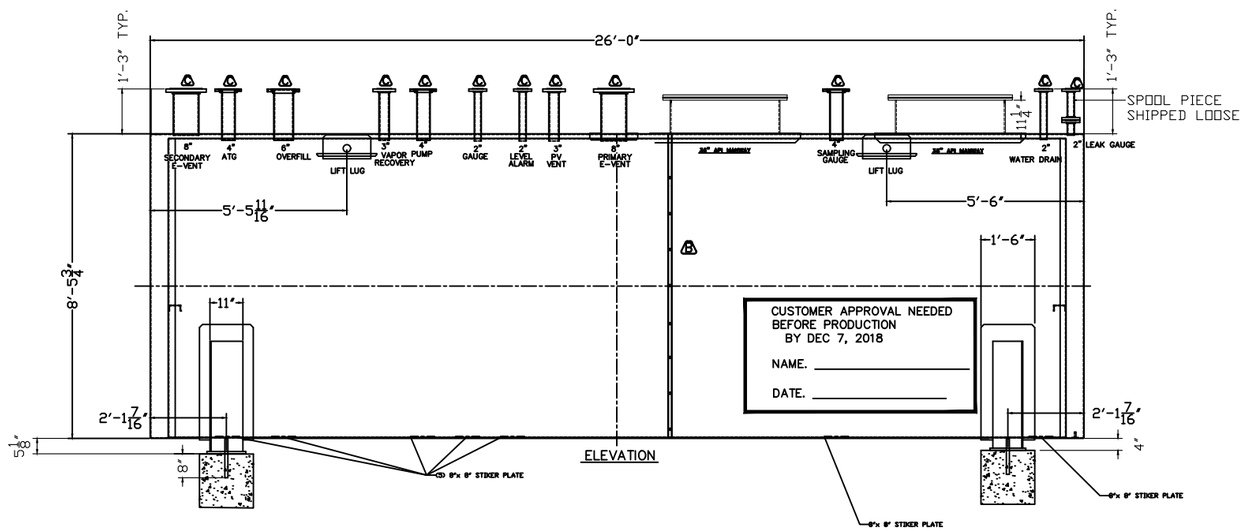

MATERIAL DESCRIPTION		
MODEL	QTY.	HORIZONTAL DW UL 142 SADDLE TANK
INNER DIAMETER		8'-4"
OUTER DIAMETER		8'-5 3/4"
INNER LENGTH		25'-0"
OUTER LENGTH		26'-0"
CAPACITY		10,000 GAL.
INNER GAUGE		1/4"
OUTER GAUGE		7ga w/1/4" HEADS
CODE		UL 142
SUPPORTS	2	SADDLES (APPROVED BY UL)
ATG	1	4" SORF FLANGE A
FILL	1	6" SORF FLANGE WITH STRIKER PLATE
VAPOR RECOVERY	1	3" SORF FLANGE
DISPENSER PUMP	1	4" SORF FLANGE A A
MANWAY TOP ACCESS	2	36" BOLT MANWAY (UL APPROVED)
MANWAY TOP ACCESS	2	36" BOLT MANWAY WITH INTERNAL LADDER
PRIMARY E-VENT	1	8" 150# ANSI SORF NOZZLE (INNER E-VENT)
SECONDARY E-VENT	1	8" 150# ANSI SORF NOZZLE (OUTER E-VENT)
TANK LEAK MONITOR	1	2" SCH 40 PIPE NIPPLE
CLOCK GAUGE	1	2" SORF FLANGE A
LEVEL ALARMS	1	2" SORF FLANGE A
PV VENT	1	3" SORF FLANGE A
MANUAL SAMPLE GAUG.	1	4" SORF FLANGE A A
WATER DRAW OFF	1	2" SORF FLANGE A A
LIFT LUG	4	LIFT LUG (UL APPROVED)
LABEL	1	UL142, CFH & ANNULAR SPACE LABEL

NOTES:
1. USE ONLY SPECIFED STEEL UL 142 & STI FLAMESHIELD CODE.
2. FACE OF FLANGES TO BE SQUARE AND PLUMB. ±1/8" TOLERANCE
3. SEE PLAN FOR TRUE ORIENTATION OF ALL OPENINGS, ETC. ±1/4" TOLERANCE
4. INNER TANK SHALL BE VACUUMED AND FREE OF ANY DEBRIS.
5. TANK SHALL BE BUILT AND LABELED PER UL142 CODE.

A ESTIMATED TANK DRY WEIGHT: 18,500 LBS.

A SANDBLAST: NO BLAST TANK SHIPPING IN THE RAW
PAINT: NO EXTERIOR PAINT
TEST: INNER 5 # AIR & SOAP
OUTER 4 # AIR & SOAP
DESIGN PRESSURE : ATMOSPHERE

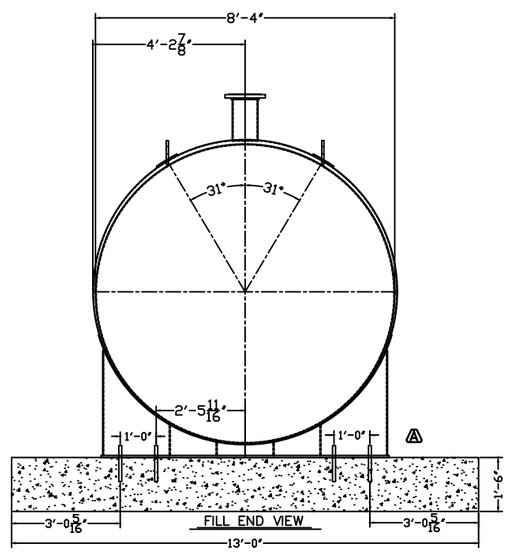

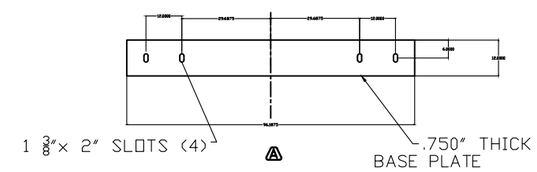

SADDLE FOOT PLATE DETAIL

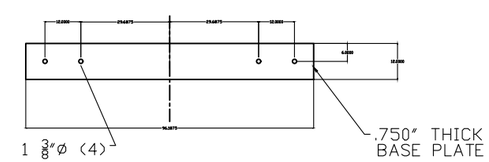

WIND AND SEISMIC REQUIREMENTS
WIND SPEED 120MPH
A EXPOSURE C
SITE CLASS D
RISK CATEGORY III

ANCHOR BOLTS
1-3/8" DIA BOLTS
8" OF EMBEDMENT

B	ADDED STRIKER PLATE PER CUSTOMER NOTES
B	ADDED INTERNAL LADDER ADDED ADDED NOZZEL PROJECTIONS ADDED NOTES FOR ANCHOR EMBEDMENT AND SIZE
A	ADDED WIND AND SEISMIC REQUIREMENTS ADDED EXTERIOR OSHA LADDER OMITTED STRIKER PLATES (EXCEPT FOR FILL) ADDED ESTIMATED TANK DRY WEIGHT REMOVED PAINT FROM TANK

SCALE

NOTICE

THIS DRAWING IS THE PROPERTY OF CERTIFIED TANK & EQUIPMENT CO. CERTIFIED TANK & EQUIPMENT CO. RESERVES ITS RIGHTS IN THIS DRAWING, ITS SUBJECT MATTER, AND THE DESIGN THEREIN DISCLOSED. THIS COPY IS LOANED SUBJECT TO THE AGREEMENT AND CONDITION THAT IT OR ITS SUBJECT MATTER IS NOT TO BE DISCLOSED IN WHOLE OR IN PART, TO ANY ~~OTHER PARTY,~~ AND THAT IT SHALL NOT BE COPIED ~~IN ANY~~ FORM WITHOUT EXPRESS WRITTEN PERMISSION OF CERTIFIED TANK & EQUIPMENT CO. ACCEPTANCE OF THIS COPY WILL BE CONSTRUED AS ACCEPTANCE OF THE FOREGOING CONDITION.

REVISIONS
A 2/11/18
B 7/17/18
C 12/3/18

8'-5 3/4" x 26'-0" 10,000 GAL DW UL142 SADDLE TANK
JM ELLSWORTH

CERTIFIED
TANK & MANUFACTURING, LLC

DRAWN BY RCH	DATE 05/11/18	SCALE	DRAWING NO.
CHECKED BY	DATE	N/A	10KHDWFL-981804CA-1-C

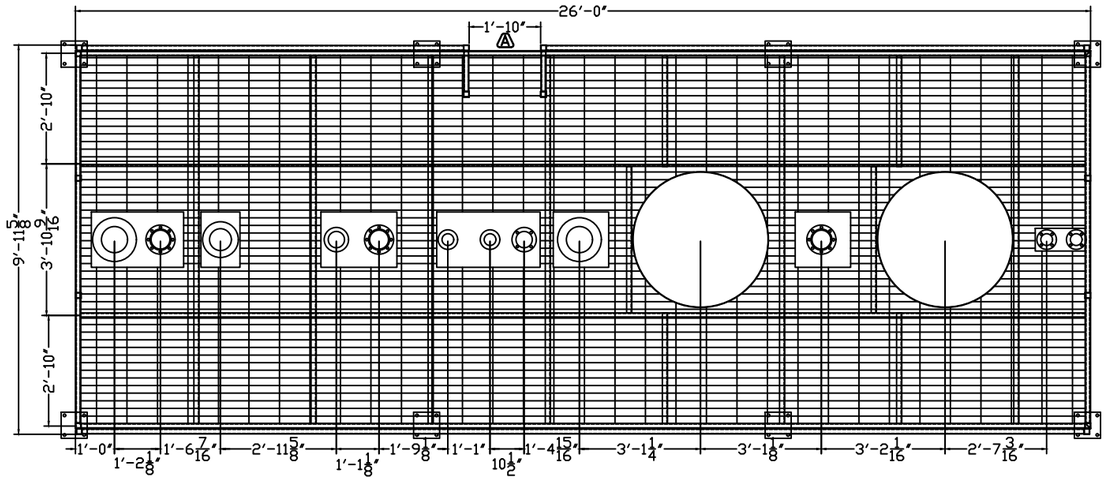

CATWALK SHALL COMPLY TO UL 142 SECTION 36.3
GUARDRAILS SHALL COMPLY TO UL 142 SECTION 35.6

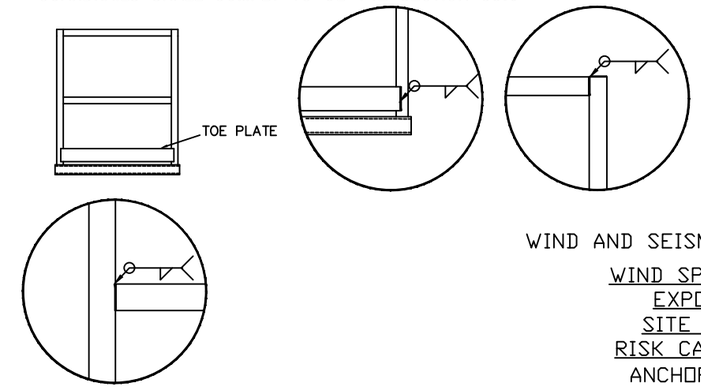

WIND AND SEISMIC REQUIREMENTS

WIND SPEED 120MPH
EXPOSURE C
SITE CLASS D
RISK CATEGORY III
ANCHOR BOLTS
1/2" DIA BOLTS
3" OF EMBEDMENT

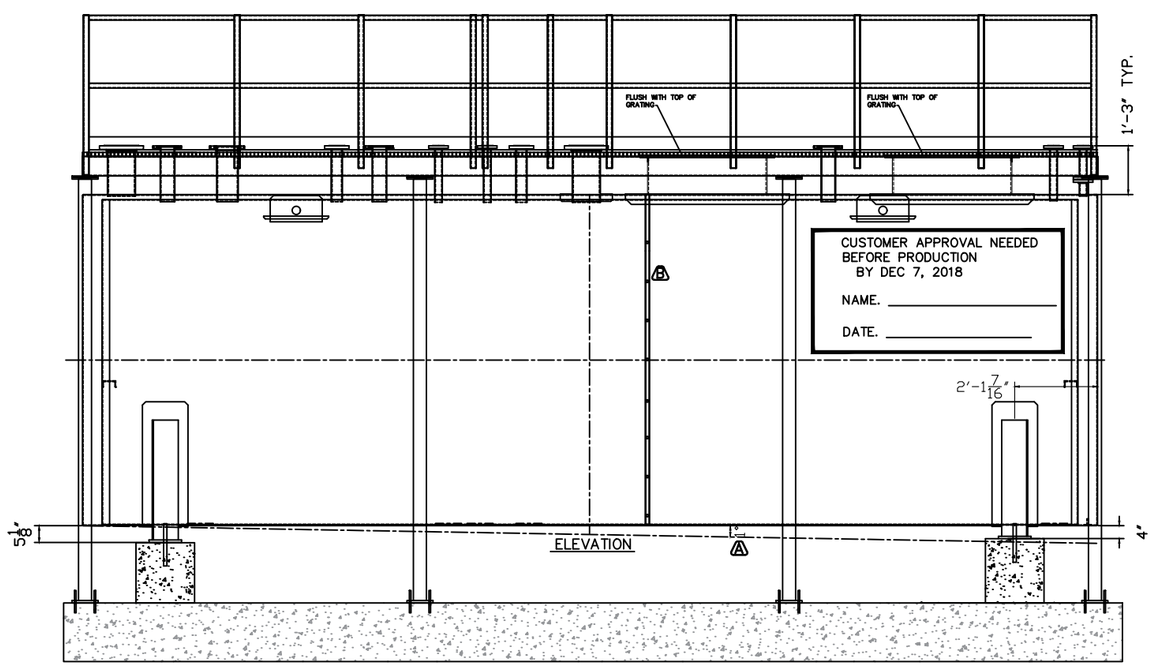

ELEVATION

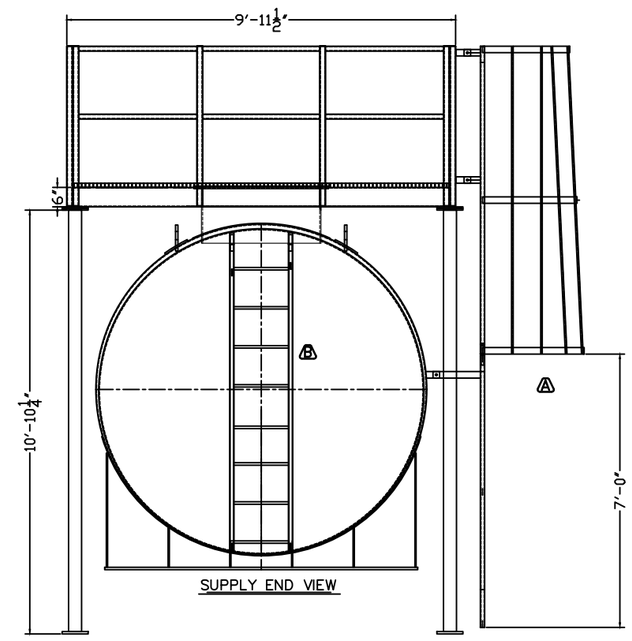

SUPPLY END VIEW

C	ADDED MOMENT CONNECTIONS TO DRAWING CHANGED SLOPE OF TANK TO DRAIN END
B	ADDED INTERNAL LADDER ADDED ADDED NOZZEL PROJECTIONS ADDED NOTES FOR ANCHOR EMBEDMENT AND SIZE
A	ADDED NOTES THAT CATWALK AND GUARDRAIL COMPLYS TO UL ADDED EXTERIOR OSHA LADDER WITH LANDING AND CLOSING GATE OMITTED INTERIOR LADDER ADDED DIMENSION FOR SADDLE SLOPE ADDED DETAILS SHOWNING TOE PLATE

SCALE

NOTICE

THIS DRAWING IS THE PROPERTY OF CERTIFIED TANK & EQUIPMENT CO. CERTIFIED TANK & EQUIPMENT CO. RESERVES ITS RIGHTS IN THIS DRAWING, ITS SUBJECT MATTER, AND THE DESIGN THEREIN DISCLOSED. THIS COPY IS LOANED SUBJECT TO THE AGREEMENT AND CONDITION THAT IT OR ITS SUBJECT MATTER IS NOT TO BE DISCLOSED IN WHOLE OR IN PART, TO ANY OTHER PARTY, AND THAT IT SHALL NOT BE COPIED IN ANY FORM WITHOUT EXPRESS WRITTEN PERMISSION OF CERTIFIED TANK & EQUIPMENT CO. ACCEPTANCE OF THIS COPY WILL BE CONSTRUED AS ACCEPTANCE OF THE FOREGOING CONDITION.

REVISIONS
A 2/11/18
B 7/17/18
C 12/3/18

FREE STANDING PLATFORM
JM ELLSWORTH

CERTIFIED TANK MANUFACTURING

CERTIFIED
TANK & MANUFACTURING, LLC

DRAWN BY RCH	DATE 05/11/18	SCALE	DRAWING NO.
CHECKED BY	DATE	N/A	10KHDWFL-981804CA-2-C

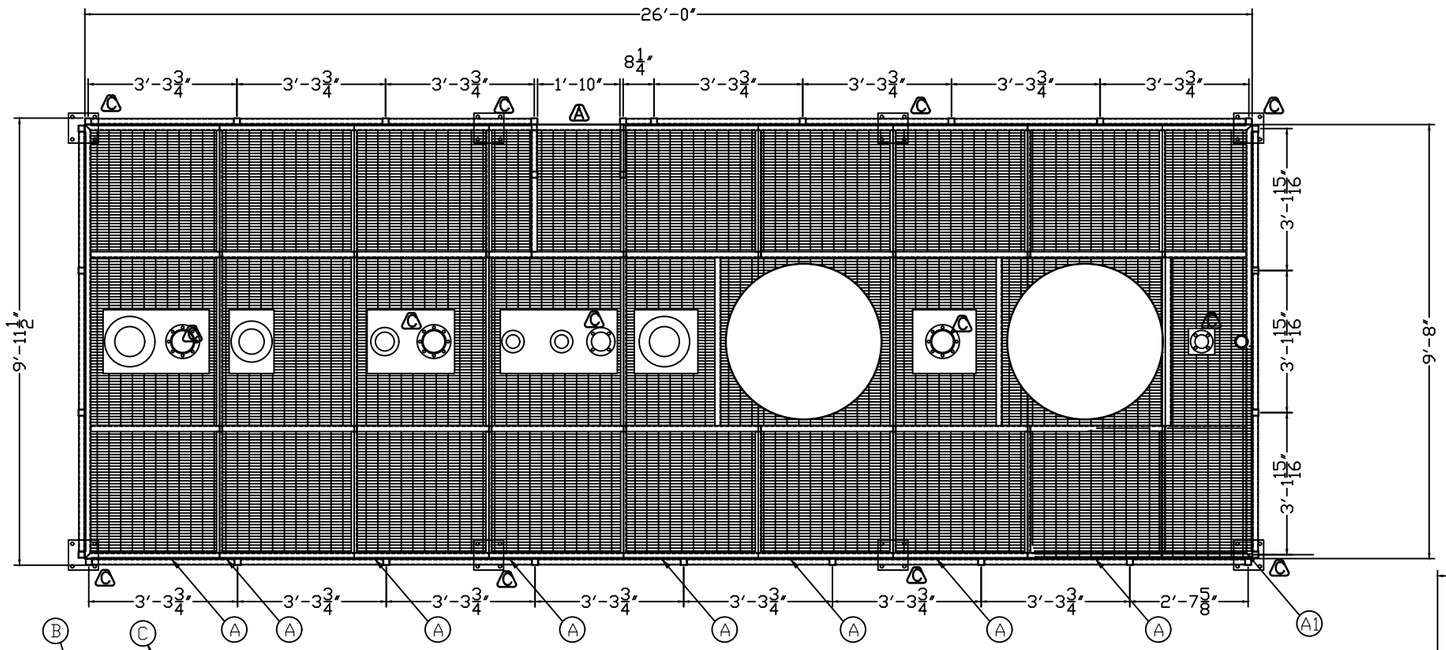

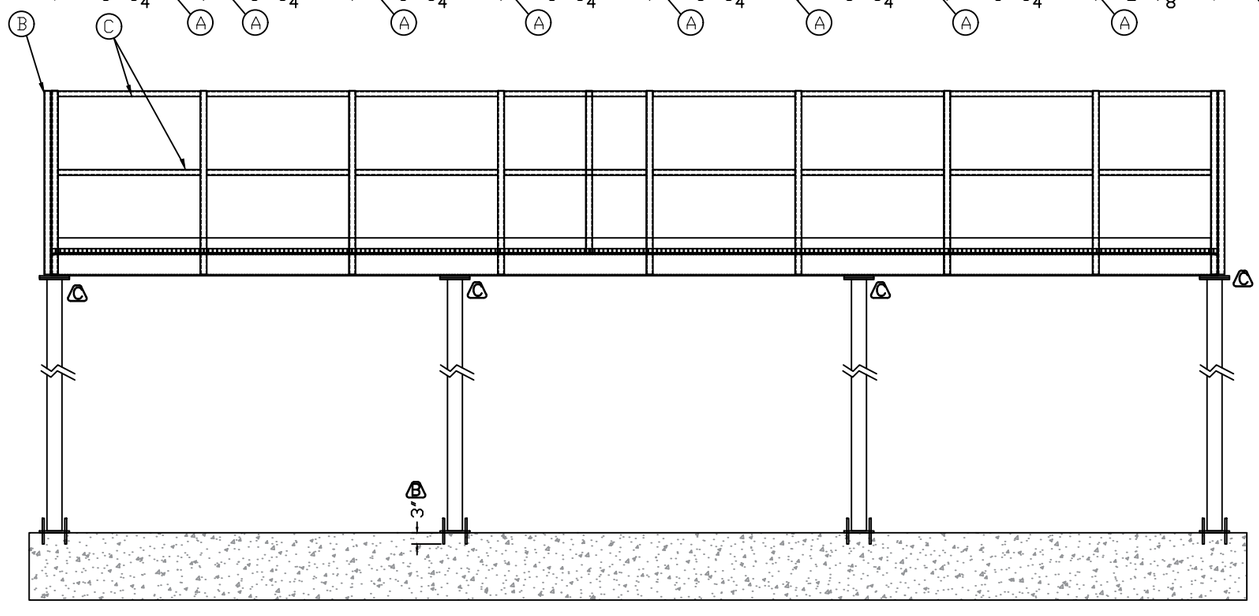

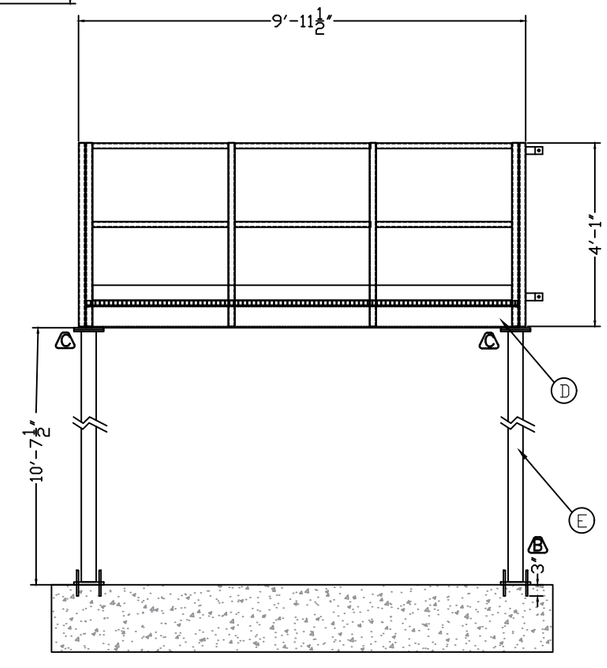

MATERIAL DESCRIPTION

MODEL	KEY	QTY.	FREE STANDING PLATFORM
PLATFORM LENGTH			26'-0"
PLATFORM WIDTH			9'-11.5"
CODE			OSHA
GRATING	A	7	GW 3/16" x 1 1/4" x 36" x 9'8"
GRATING	A1	1	GW 3/16" x 1 1/4" x 24" x 9'8"
VERTICAL HAND RAIL	B	29	SQUARE TUBE, 1.750 x VARIES
HORIZONTAL HAND RAIL	C	29	SQUARE TUBE, 1.50 x VARIES
PLATFORM SUPPORTS	D	31	C6 x 8.2# CHANNEL x VARIES
PLATFORM LEGS	E	8	HSS 4 x 4 x .5 x VARIES
LEG BASE PLATES	F	8	8 x 8 x .5 WITH 1/2" MOUNTING HOLES
PLATFORM BASE PLATES	G	16	8 x 8 x .5 WITH 3/4" MOUNTING HOLES

CUSTOMER APPROVAL NEEDED
BEFORE PRODUCTION
BY DEC 7, 2018

NAME. _____

DATE. _____

WIND AND SEISMIC REQUIREMENTS
WIND SPEED 120MPH
EXPOSURE C
SITE CLASS D
RISK CATEGORY III
ANCHOR BOLTS
1/2" DIA BOLTS
3" OF EMBEDMENT

C	ADDED MOMENT CONNECTIONS TO DRAWING
B	ADDED INTERNAL LADDER ADDED ADDED NOZZEL PROJECTIONS ADDED NOTES FOR ANCHOR EMBEDMENT AND SIZE
A	ADDED NOTES THAT CATWALK AND GUARDRAIL COMPLYS TO UL ADDED EXTERIOR OSHA LADDER WITH LANDING AND CLOSING GATE OMITTED INTERIOR LADDER ADDED DIMENSION FOR SADDLE SLOPE ADDED DETAILS SHOWNING TOE PLATE

SCALE

NOTICE

THIS DRAWING IS THE PROPERTY OF CERTIFIED TANK & EQUIPMENT CO. CERTIFIED TANK & EQUIPMENT CO. RESERVES ITS RIGHTS IN THIS DRAWING, ITS SUBJECT MATTER, AND THE DESIGN THEREIN DISCLOSED. THIS COPY IS LOANED SUBJECT TO THE AGREEMENT AND CONDITION THAT IT OR ITS SUBJECT MATTER IS NOT TO BE DISCLOSED IN WHOLE OR IN PART, TO ANY OTHER PARTY, AND THAT IT SHALL NOT BE COPIED IN ANY FORM WITHOUT EXPRESS WRITTEN PERMISSION OF CERTIFIED TANK & EQUIPMENT CO. ACCEPTANCE OF THIS COPY WILL BE CONSTRUED AS ACCEPTANCE OF THE FOREGOING CONDITION.

REVISIONS
A 2/11/18
B 7/17/18
C 12/3/18

FREE STANDING PLATFORM
JM ELLSWORTH

CERTIFIED
TANK & MANUFACTURING, LLC

DRAWN BY RCH DATE 05/11/18
CHECKED BY DATE
SCALE N/A
DRAWING NO. 10KHDWFL-981804CA-3-C

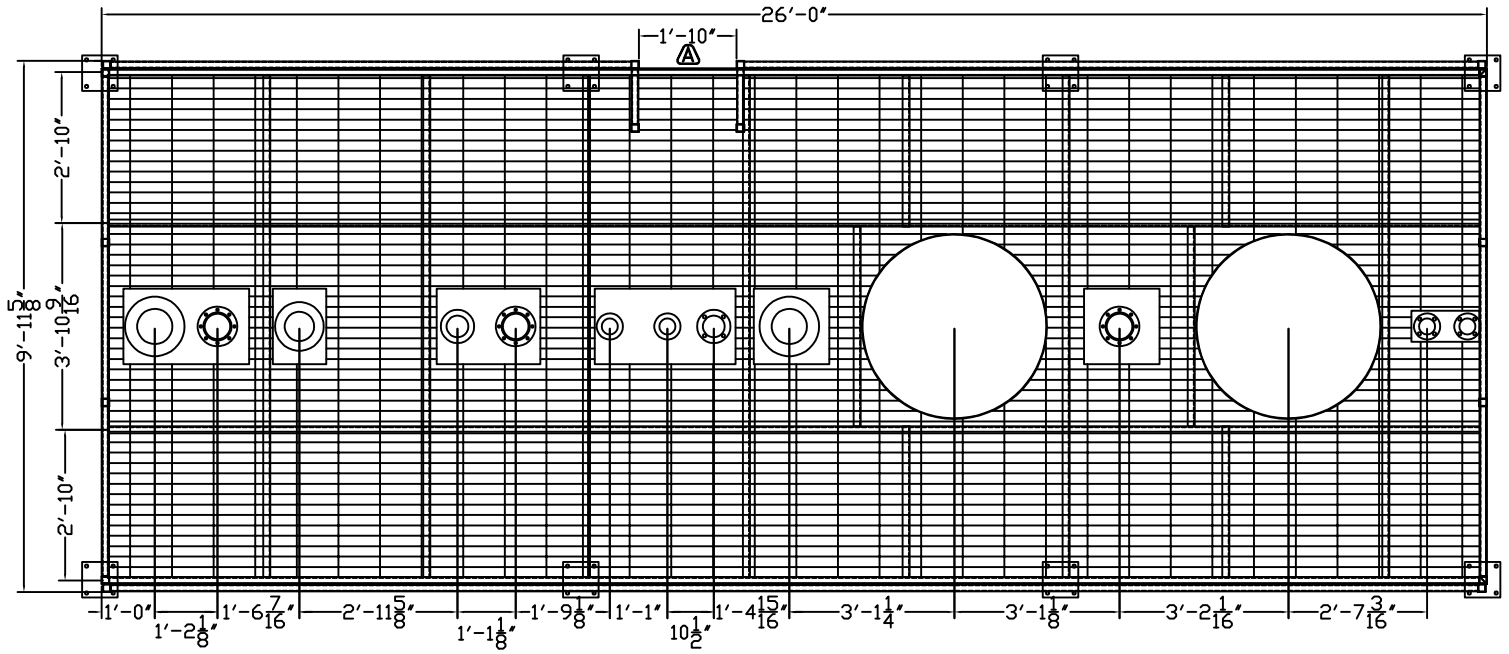

CATWALK SHALL COMPLY TO UL 142 SECTION 36.3
GUARDRAILS SHALL COMPLY TO UL 142 SECTION 35.6

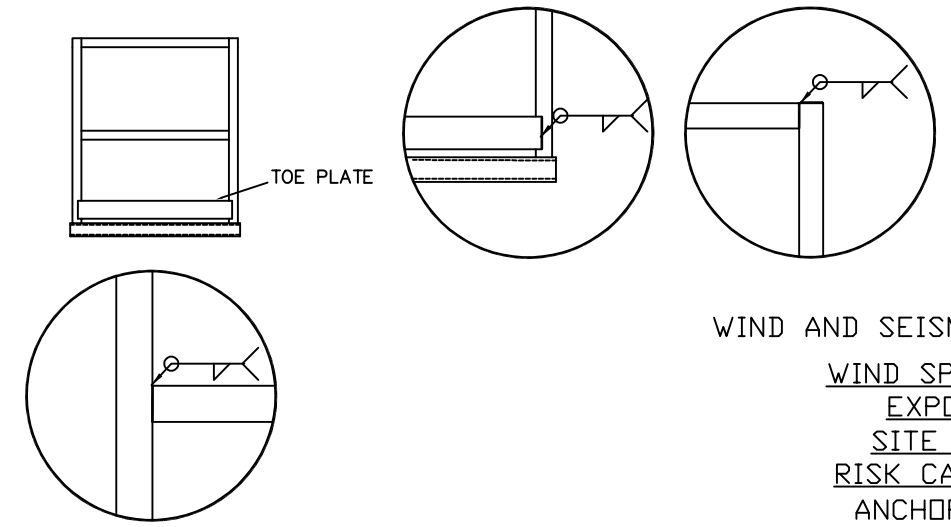

WIND AND SEISMIC REQUIREMENTS

WIND SPEED 120MPH
EXPOSURE C
SITE CLASS D
RISK CATEGORY III
ANCHOR BOLTS
1/2" DIA BOLTS
3" OF EMBEDMENT

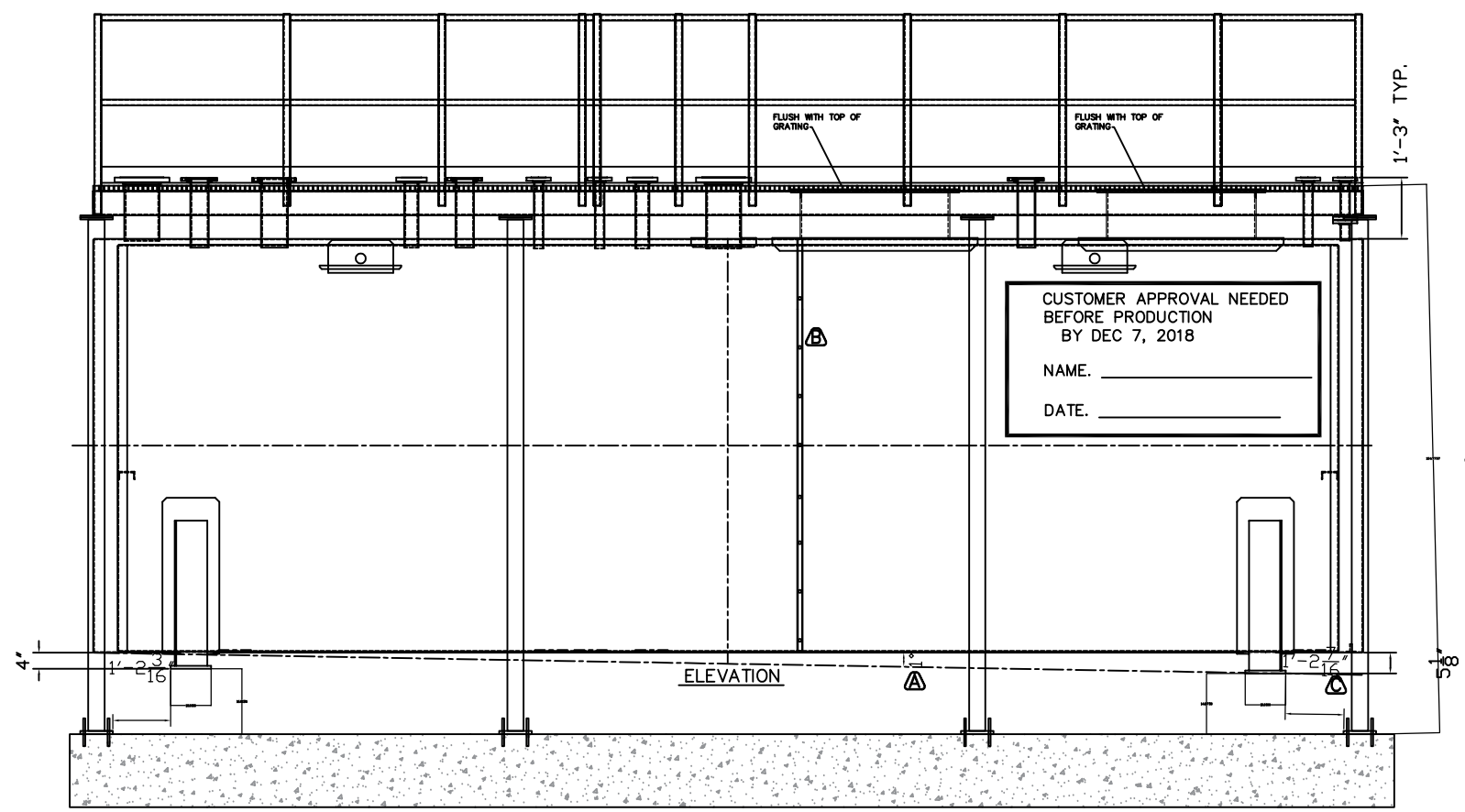

ELEVATION

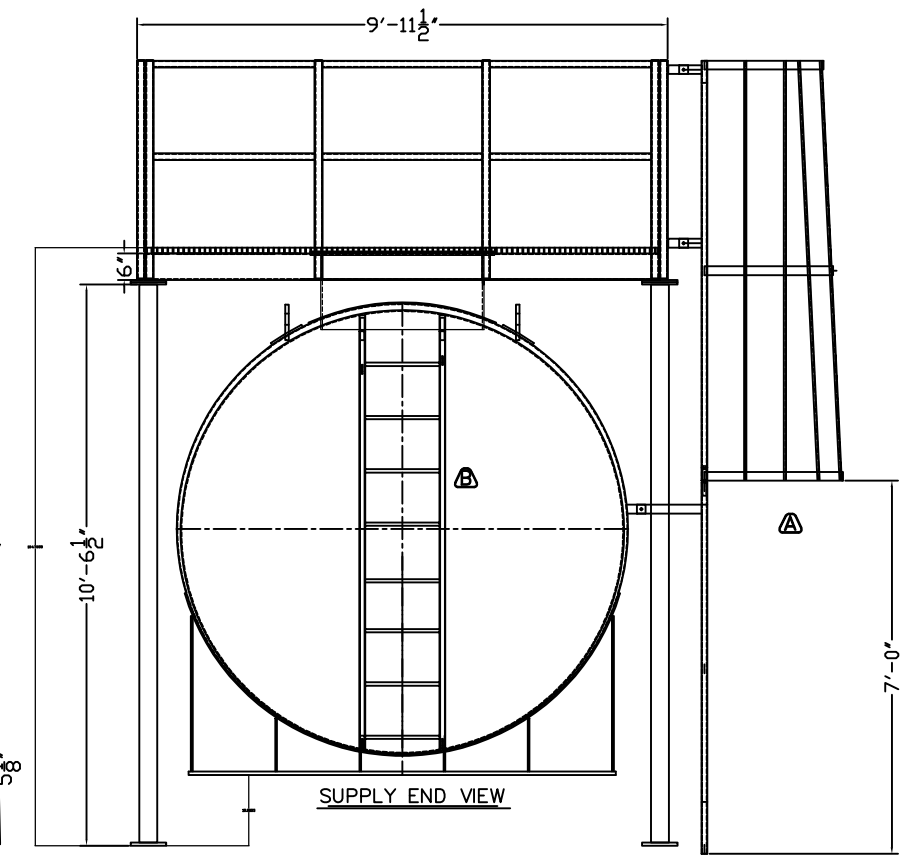

SUPPLY END VIEW

C	ADDED MOMENT CONNECTIONS TO DRAWING CHANGED SLOPE OF TANK TO DRAIN END
B	ADDED INTERNAL LADDER ADDED ADDED NOZZEL PROJECTIONS ADDED NOTES FOR ANCHOR EMBEDMENT AND SIZE
A	ADDED NOTES THAT CATWALK AND GUARDRAIL COMPLYS TO UL ADDED EXTERIOR OSHA LADDER WITH LANDING AND CLOSING GATE OMITTED INTERIOR LADDER ADDED DIMENSION FOR SADDLE SLOPE ADDED DETAILS SHOWNING TOE PLATE

SCALE

NOTICE

THIS DRAWING IS THE PROPERTY OF CERTIFIED TANK & EQUIPMENT CO. CERTIFIED TANK & EQUIPMENT CO. RESERVES ITS RIGHTS IN THIS DRAWING, ITS SUBJECT MATTER, AND THE DESIGN THEREIN DISCLOSED. THIS COPY IS LOANED SUBJECT TO THE AGREEMENT AND CONDITION THAT IT OR ITS SUBJECT MATTER IS NOT TO BE DISCLOSED IN WHOLE OR IN PART, TO ANY OTHER PARTY, AND THAT IT SHALL NOT BE COPIED IN ANY FORM WITHOUT EXPRESS WRITTEN PERMISSION OF CERTIFIED TANK & EQUIPMENT CO. ACCEPTANCE OF THIS COPY WILL BE CONSTRUED AS ACCEPTANCE OF THE FOREGOING CONDITION.

REVISIONS
A 2/11/18
B 7/17/18
C 12/3/18

FREE STANDING PLATFORM
JM ELLSWORTH

CERTIFIED TANK MANUFACTURING

CERTIFIED
TANK & MANUFACTURING, LLC

DRAWN BY RCH DATE 05/11/18	SCALE	DRAWING NO.
CHECKED BY DATE	N/A	10KHDWFL-981804CA-2-C

STRESSES IN UL-142 TANK ON TWO SADDLES

User instructions found here http://tinyurl.com/cx64rsw

ASCE 7-10 DATE: 3/8/2019 10:55

INPUT VARIABLES	
Outer Tank Outside Diameter (feet) (TD)	8.480
Outer Tank Length (feet) (TL)	26.000
Depth of Head (inches) (HD)	0.625
Saddle Location (inches) (A)	25.000
Saddle Contact Angle (degrees) (ø)	135
Shell Thickness (inches) (Primary Tank) (ts)	0.250
Head Thickness (inches) (Primary Tank) (th)	0.250
Shell Thickness (inches) (Secondary Tank) (tss)	0.179
Head Thickness (inches) (Secondary Tank) (ths)	0.250
Saddle Width (inches) (b)	9.000
Additional Loads (lbs)	1000
Total Load per Saddle (lbs)	53500
Yield Strength of Shell Material (psi)	36000
Modulus of Elasticity of Shell Material (psi)	29000000
Yield Strength of Saddle Material (psi)	36000
Modulus of Elasticity of Saddle Material (psi)	29000000

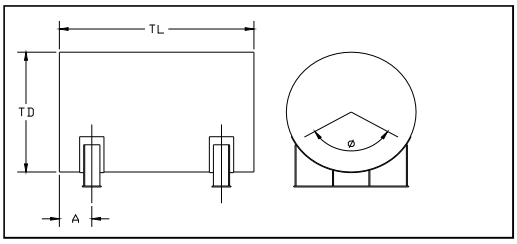

SADDLE INPUT VARIABLES	
Saddle Height (inches) (SH)	56.000
Base Plate Thickness (inches) (BPL)	0.500
Wear Plate Thickness (inches) (WPL)	0.250
Web Plate and Rib Thickness (inches) (RPL)	0.313

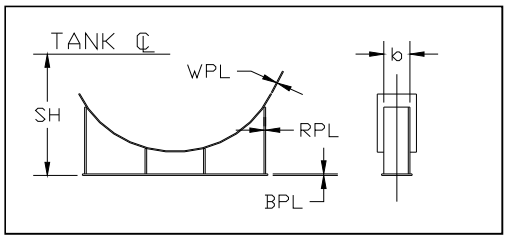

WIND AND SEISMIC REQUIREMENTS	
Wind Speed (mph)	120
Exposure (B,C,D)	C
Mapped Spectral Acceleration (S_s %)	12.0
Site Class	D
Risk Category (I, II, III, or IV)	III
WIND CALCULATIONS	
Risk Category:	III
Velocity Pressure Exposure Coefficient (K_z)=	0.90
Directionality Factor (K_d)=	0.95
Topographic Factor (K_{zt})=	1.00
q_z (psf) = 0.00256 * K_z * K_{zt} * K_d * V^2 =	31.52
Gust Factor (G) :	0.85
Net Force Coefficient (flat) (C_f) =	1.40
Net Force Coefficient (round) (C_{f1}) =	0.60
A_f (ft²) =	67.81
A_{f1} (ft²) =	220.48
F_L (lbs) = q_z * G * C_f * A_f =	2543
F_t (lbs) = q_z * G * C_{f1} * A_{f1} / 2 =	1772
Q_{wL} (lbs) (ASCE7-10, Para. 2.4.1(5))=	53826
Q_{wt} (lbs) (ASCE7-10,Para. 2.4.1(5))=	55400

NOTE: You must select Wind Speed per ASCE7-10 Fig. 26.5-1B

STRESSES IN UL-142 TANK ON TWO SADDLES

User instructions found here http://tinyurl.com/cx64rsw

ASCE 7-10 DATE: 3/8/2019 10:55

SEISMIC CALCULATION	
Mapped Spectral Acceleration (S_s %)	12.0
Seismic Importance Factor (I)	1.25
Site Class	D
Occupancy Category	III
Site Coefficient (F_a)	1.6
Maximum Spectral Response Acceleration (S_{MS})	0.192
Design Spectal Response Acceleration (S_{DS})	0.128
Reliability factor	1.0
Design Base Shear	
V = (per ASCE7-10 Eq. 15.4-5)	5136
E (longitudinal) =	2467
E (transverse) =	5959
Q_{sL} (lbs) =	55227
Q_{st} (lbs) =	57671

STRESSES IN UL-142 TANK ON TWO SADDLES

User instructions found here http://tinyurl.com/cx64rsw

ASCE 7-10 DATE: 3/8/2019 10:55

INVALIDATION STATEMENTS

SADDLE VARIABLES	
A2	95.0140
A1	94.0140
B	56.0000
C	0.2500
D	0.5000
E1	3.0000
F	10.0000
G	8.6875
H	14.5638
J	0.3125
RS	23.4254
V	35.9334
V1	9.9717
L	130.8602

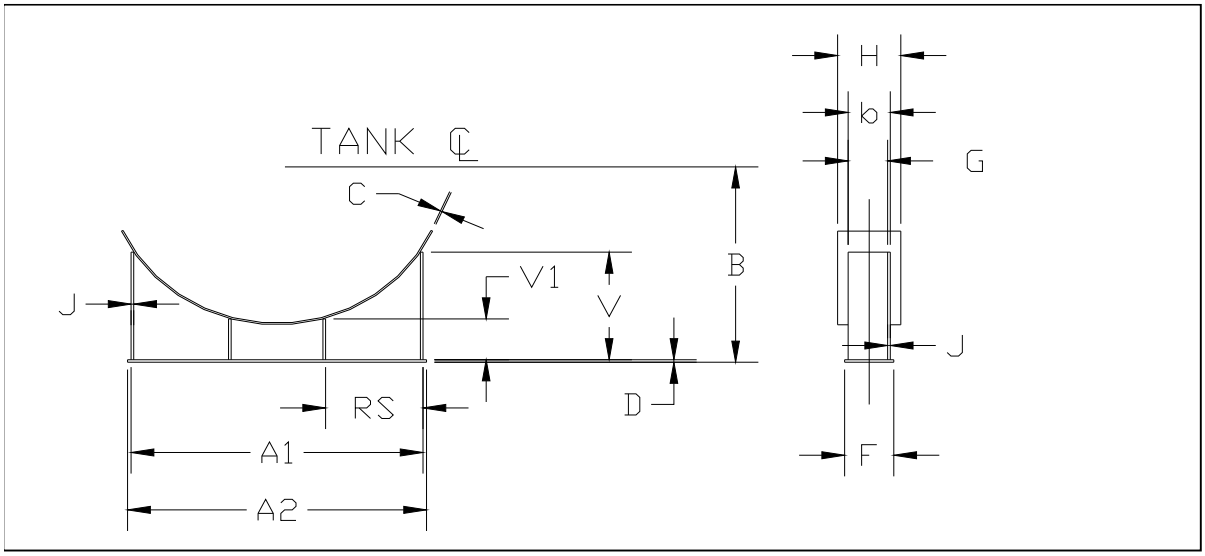

ONLINE CERTIFICATIONS DIRECTORY

Search results

You may choose to Refine Your Search.		
Company Name	Category Name	Link to File
CERTIFIED TANK & MFG L L C	Aboveground Flammable-liquid Tanks	EEEV.MH5668
CERTIFIED TANK & MFG L L C	Aboveground Flammable-liquid Tanks Certified for Canada	EEEV7.MH5668
CERTIFIED TANK & MFG L L C	Protected Aboveground Tanks for Flammable and Combustible Liquids	EELU.MH21280
CERTIFIED TANK & MFG L L C	Protected Aboveground Tanks for Flammable and Combustible Liquids Certified for Canada	EELU7.MH21280
CERTIFIED TANK & MFG L L C	Special-purpose Tanks	EFVT.MH21281
CERTIFIED TANK & MFG L L C	Special-purpose Tanks Certified for Canada	EFVT7.MH21281

Model number information is not published for all product categories. If you require information about a specific model number, please contact Customer Service for further assistance.

© 2015 UL LLC