From: Pilz, Karl
To: Curran, Kimberley
Subject: RE: Florida Equipment Registration Form
Date: Friday, October 11, 2019 10:45:15 AM
Attachments: image001.png
image003.png
image004.png
image005.png
image006.png
image007.png
LR2050-01_EN-US.pdf
62-762.901(9)EquipmentRegistrationForm filled out.pdf

Hi Kim,

Attached are all the documents for getting our Level Sensor on your EQ list for using with diesel fuel tanks. Below are links to the details for each point on the information checklist. Let me know if you need any other info! Thanks for all your help!

1.) Unit is approved by UL (cULus and CE)
2.) Click here for our UL documentation which lists the LR2050 on page 3.
3.) UL is nationally recognized. If you need more info for this item, please let me know!
4.) See datasheet attached. Click here for the online datasheet. Click here for a brochure that shows the probes and coax tube accessories that can be used with this sensor. Each is listed by length with the corresponding part number. For proper operation in diesel tanks, the probe and coax tube get threaded onto the sensor head, and the probe/coax tube get submersed into the liquid.
5.) Click here for the Operating instructions manual which has installation instructions.
6.) The following apply to the Storage Tank System and not the individual components. This is the responsibility of the OEM of the Storage Tank System.
- 62-761.500 - Storage Tank System Requirements
- 62-762.501 - Storage Tank System Requirements for Shop Fabricated Storage Tanks
- 62-762.502 - Storage Tank System Requirements for Field Erected Storage Tanks

Note: In the Operating Instructions, there are directions to carry out a functional check and a simulation feature, both of which can be used if the customer desires.
7.) The following apply to the Storage Tank System and not the individual components. This is the responsibility of the OEM of the Storage Tank System.
- 62-761.500 - Storage Tank System Requirements
- 62-762.501 - Storage Tank System Requirements for Shop Fabricated Storage Tanks
- 62-762.502 - Storage Tank System Requirements for Field Erected Storage Tanks

Note: In the Operating Instructions, there are directions to carry out a functional check and a simulation feature, both of which can be used if the customer desires.
8.) Yes
9.) No
10.) No
11.) No
12.) N/A

Karl Pilz
Sales Engineer
ifm efector inc.

Mobile: 919-272-1777
Website: www.ifm.com/us
Call for help: 800-441-8246
Purchasing: e-shop

From: Curran, Kimberley <Kimberley.Curran@FloridaDEP.gov>
Sent: Monday, August 26, 2019 10:04 AM
To: Pilz, Karl <karl.pilz@ifm.com>
Subject: Florida Equipment Registration Form

Karl,

It was a pleasure to speak with you this morning. Please find the EQ Form attached. Feel free to send all your information to me or you can send it to the Tanknotify@floridadep.gov email address. I'll get it either way.

Have a great day and let me know if you have additional questions.
Kim

Kim Curran
Environmental Consultant
Storage Tank Compliance
Florida Department of Environmental Protection
Tallahassee, Florida 32399-2400
Kimberley.Curran@FloridaDEP.gov
Office: 850.245.8849
Website: Storage Tank Compliance

Continuous level measurement in harsh environments

LR level sensor in a new design with extended functions

- **Mounting adjustment enables position-independent installation**
- **Medium temperature up to 100 °C**
- **Simulation function facilitates testing of the plant software**
- **Automatic detection of the rod length**
- **Probe lengths of 15...200 cm**

Application

Harsh environment conditions or high temperatures leave the LR2050 cold. Installation in confined spaces or detection of oils using a coaxial pipe is no problem for LR, either. LR flexibly adapts to any application thanks to the installation adjustment and the modular concept.

Successful thanks to modular concept

The probes can be shortened, or changed, so the LR reduces stock-keeping and simplifies replacement.

User-friendly setting

Even before installation the user can set the sensor parameters via pushbuttons or IO-Link on the PC. Installation adjustment is made on site via pushbutton, if required.

Application: aqueous media, coolants, cleaning agents, oils. *

Process connection	Medium temperature [°C]	Max. tank pressure [bar]	Protection rating/ protection class	Order no.
M12 connector · IO-Link 1.1 Output function 2 x NO / NC or 1 x NO / NC + 1 x analogue (4...20 mA; scalable)				
G 3/4	-20...100	-1...4	IP 68, IP 69K / III	**LR2050**

Accessories (to be ordered separately)

Type	Description	Order no.
Rods high-grade stainless steel (316L / 1.4404)		
	150 mm	**E43225**
	210 mm	**E43351**
	240 mm	**E43203**
	265 mm	**E43352**
	300 mm	**E43226**
	450 mm	**E43204**
	500 mm	**E43227**
	700 mm	**E43205**
	1000 mm	**E43207**
	1200 mm	**E43208**
	1400 mm	**E43209**
	1600 mm	**E43210**
	2000 mm	**E43353**
Coaxial pipes stainless steel (304S15 / 1.4301)		
G 3/4	150 mm	**E43230**
	210 mm	**E43354**
	240 mm	**E43211**
	265 mm	**E43355**
	300 mm	**E43228**
	450 mm	**E43212**
	500 mm	**E43229**
	700 mm	**E43213**
	1000 mm	**E43214**
	1200 mm	**E43215**
	1400 mm	**E43216**
	1600 mm	**E43217**
	2000 mm	**E43356**
3/4" NPT	450 mm	**E43218**
	700 mm	**E43219**
	1000 mm	**E43220**
	1600 mm	**E43221**
Coaxial pipes, slotted stainless steel (304S15 / 1.4301)		
	700 mm	**E43333**
	1200 mm	**E43334**

Further technical data		
Operating voltage	[V]	18...30 DC
Current rating	[mA]	200
Current consumption	[mA]	< 50
Power-on delay time	[s]	≤ 3
Dielectric constant medium		1.8...5* > 5
Ambient temperature	[°C]	-40...80
Metals in contact with the medium		high-grade stainless steel (316L / 1.4404, 316S12 / 14435), PTFE, FKM
Housing materials		high-grade stainless steel (316L / 1.4404), PEI, PBT, PTFE, FKM
IO-Link device type of transmission		1.1

* A coaxial pipe is required for the unit to function correctly in low dielectric media.

Accessories (to be ordered separately)

Type	Description	Order no.
Flange plates stainless steel (303 / 1.4305)		
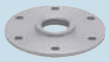	Flange plate, LR 73-90	**E43201**
	Flange plate, LR 73 - 90 / NPT	**E43206**
	Flange plate, LR 65-80	**E43202**

IO-Link accessories

Type	Description	Order no.
	IO-Link interface for parameter setting and analysis of units with DTM specification, current consumption from USB port: max. 500 mA	**E30396**
	Memory plug, parameter memory for IO-Link sensors	**E30398**
	LINERECORDER SENSOR, software for parameter setting and setting up IO-Link sensors	**QA0001**

ifm article no. 78001883 · We reserve the right to make technical alterations without prior notice. · 11/2015

LR2050

Continuous level sensor (guided wave radar)

LR0000B-ER34AKSKG/US

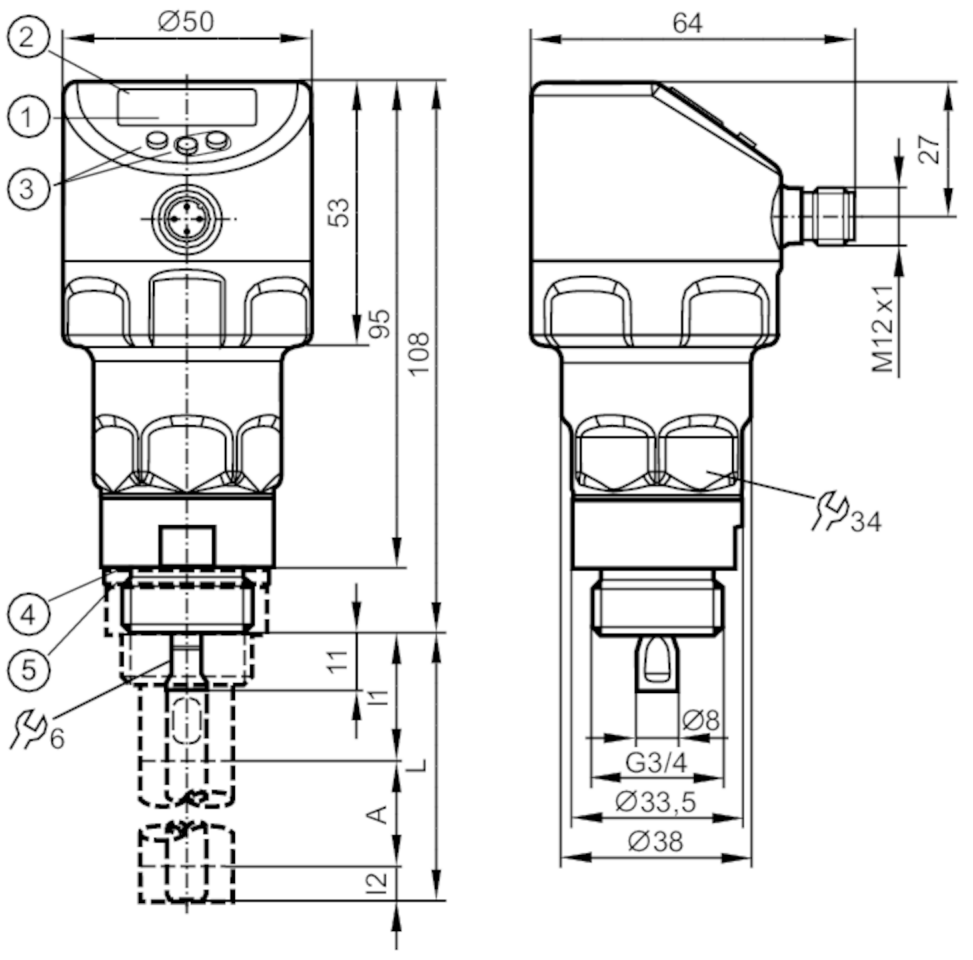

1	alphanumeric display 4-digit
2	LEDs Display unit / Switching status
3	Programming buttons
4	sealing
5	Additional sealing for use with coaxial pipe
A	Active zone
I1 / I2	Inactive ranges

CE CRN c UL us LISTED EAC IO-Link

Product characteristics		
Number of inputs and outputs		Number of digital outputs: 1; Number of analog outputs: 1
Probe length L	[mm]	150...2000
Process connection		G 3/4 external thread
Application		
Media		Liquids; oil-based media; water-based media
Dielectric constant of the medium		≥ 1,8; (for media with a dielectric constant of 1.8...5 (e.g. oils), a coaxial pipe is needed for operation)
Recommended media		water; water-based media; oils; oil-based media
Medium temperature	[°C]	-20...100
Tank pressure	[bar]	-1...16
MAWP (for applications according to CRN)	[bar]	16

LR2050

Continuous level sensor (guided wave radar)

LR0000B-ER34AKSKG/US

Electrical data		
Operating voltage	[V]	18...30 DC
Current consumption	[mA]	< 50
Protection class		III
Reverse polarity protection		yes
Power-on delay time	[s]	< 3
Inputs / outputs		
Number of inputs and outputs		Number of digital outputs: 1; Number of analog outputs: 1
Outputs		
Total number of outputs		2
Output signal		switching signal; analog signal; IO-Link
Electrical design		PNP/NPN
Number of digital outputs		1
Output function		normally open / closed; (configurable)
Max. voltage drop switching output DC	[V]	2.5
Permanent current rating of switching output DC	[mA]	150; (200 (...60 °C))
Number of analog outputs		1
Analog current output	[mA]	4...20, invertible; (scalable)
Short-circuit protection		yes
Type of short-circuit protection		yes (non-latching)
Overload protection		yes
Measuring/setting range		
Probe length L	[mm]	150...2000
Active range A	[mm]	L-40 / (L-60); (when set to oil and oil based media)
Inactive range I1 / I2	[mm]	30 / 10 (30); (when set to oil and oil based media)
Sampling rate	[Hz]	4
Setting range		
Set point SP	[mm]	≥ 15 (35) / ≤ L-30
Note on setpoint SP		when set to oil and oil based media
Reset point rP	[mm]	≥ 10 (30) / ≤ L-35
Note on reset point rP		when set to oil and oil based media
In steps of	[mm]	1
Hysteresis	[mm]	> 5
Accuracy / deviations		
Measuring error	[% of the measured value]	± 7 mm
Offset error	[mm]	5
Resolution	[mm]	1
Zero signal (current)	[mA]	4.0
Full signal (current)	[mA]	20
Temperature drift per 10 K		± 0.2 %

LR2050

Continuous level sensor (guided wave radar)

LR0000B-ER34AKSKG/US

Interfaces		
Communication interface		IO-Link
Transmission type		COM2 (38,4 kBaud)
IO-Link revision		1.1
SDCI standard		IEC 61131-9
IO-Link device ID		0x0001DF
Profiles		Smart Sensor: Process Data Variable; Device Identification, Device Diagnosis
SIO mode		yes
Required master port class		A
Process data analogue		1
Process data binary		2
Min. process cycle time	[ms]	2.3
Operating conditions		
Ambient temperature	[°C]	-40...80
Storage temperature	[°C]	-40...100
Protection		IP 68; IP 69K
Tests / approvals		
EMC	DIN EN 61000-6-2	
	DIN EN 61000-6-3	: in a metal tank
	DIN EN 61000-6-4	: in a plastic tank
Shock resistance	DIN EN 60068-2-27	50 g (11 ms) / 20 g (6 ms) with reference rod 0.5 m
Vibration resistance	DIN EN 60068-2-6	20 g (10...2000 Hz) / 1 g (5...200 Hz) with reference rod 0.5 m
MTTF	[years]	216
Mechanical data		
Weight	[g]	447.5
Material		stainless steel (1.4404 / 316L); PEI; PFA; PBT; FKM
Materials (wetted parts)		stainless steel (1.4404 / 316L); stainless steel (1.4435 / 316L); PTFE; FKM
Process connection		G 3/4 external thread
Displays / operating elements		
Display	Display unit	3 x LED, green
	Switching status	2 x LED, yellow
	Level	alphanumeric display, 4-digit
	Parameter setting	alphanumeric display, 4-digit
Remarks		
Pack quantity		1 pcs.

Electrical connection

Connector: 1 x M12; Contacts: gold-plated

LR2050

Continuous level sensor (guided wave radar)

LR0000B-ER34AKSKG/US

Connection

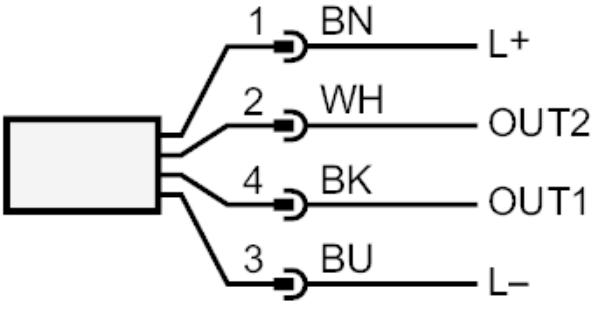

OUT1:	Switching output IO-Link
OUT2:	Switching output analog output
	Colours to DIN EN 60947-5-2
	Core colors :
BK =	black
BN =	brown
BU =	blue
WH =	white

LR2050

Continuous level sensor (guided wave radar)

LR0000B-ER34AKSKG/US

Diagrams and graphs

Measurement deviation D at the limits of the active rod range

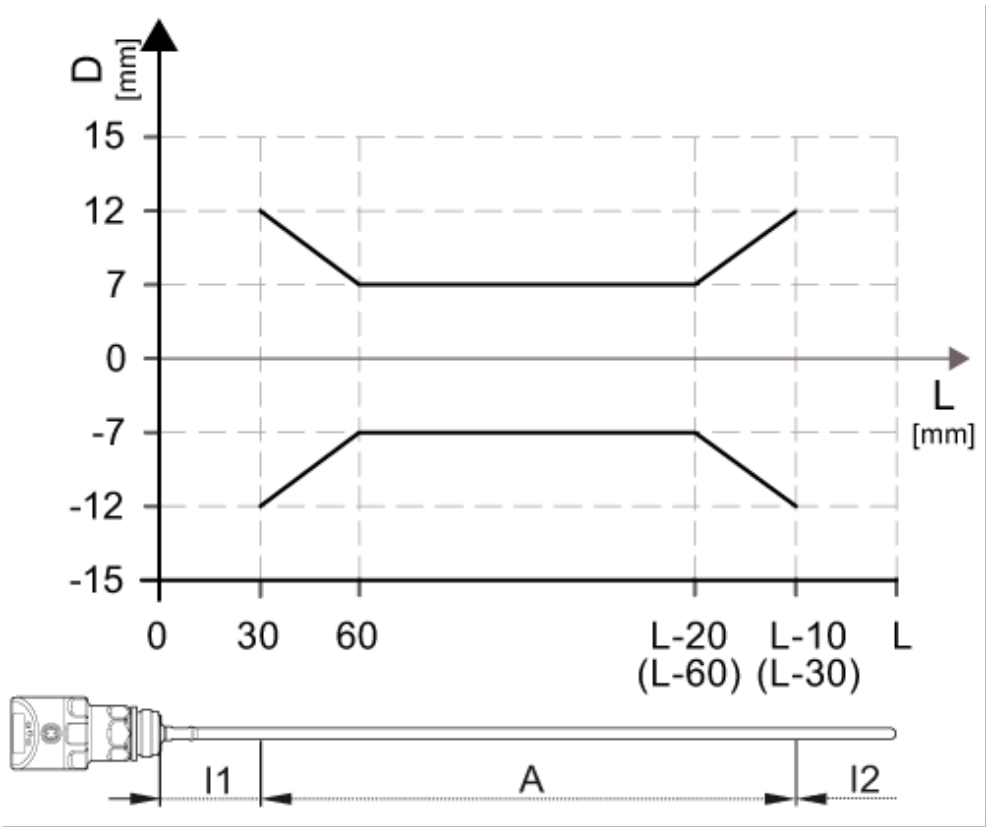

Operating instructions
Electronic level sensor

LR2050

UK

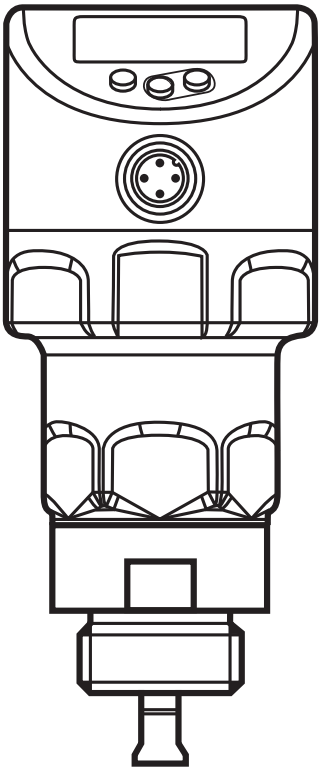

80229610 / 01 06 / 2017

Contents

1 Preliminary note 5
1.1 Symbols used 5
2 Safety instructions 5
3 Items supplied 6
4 Getting started 6
5 Functions and features 7
5.1 Application area 7
5.2 Restriction of the application area 7
6 Function 8
6.1 Measuring principle 8
6.2 Outputs 9
6.3 Other features of the unit 9
6.3.1 Display functions 9
6.3.2 Analogue function 10
6.3.3 Switching functions 12
6.3.4 Damping function 13
6.3.5 Rods for different tank heights 13
6.3.6 Defined state in case of a fault 13
6.3.7 IO-Link 14
6.3.8 Simulation functions 14
7 Installation 14
7.1 Installation location / environment 14
7.2 Unit with single probe 14
7.2.1 Minimum distances and minimum connection piece diameter 15
7.2.2 Installation in pipes 15
7.2.3 Applications with viscous and fast flowing media 16
7.2.4 Fill openings 16
7.2.5 In case of heavy soiling 17
7.2.6 Heavy foam build-up and turbulence 17
7.2.7 Notes on tank adjustment 18
7.3 Unit with coaxial probe 19
7.4 Installation of the rod 20
7.4.1 Installation of the rod 20

7.4.2 Installation of the coaxial pipe 21
7.5 Rod length 22
7.5.1 Shortening of the rod 22
7.5.2 Determine rod length L for single probes 22
7.5.3 Shortening of the coaxial pipe 23
7.5.4 Determine rod length L for coaxial probes 23
7.6 Installation of the unit with single probe 24
7.6.1 Installation to G¾ process connection directly in the tank lid 24
7.6.2 Installation in the tank lid using a flange plate 25
7.6.3 Installation in open tanks 26
7.6.4 Installation in plastic tanks 27
7.7 Installation of the unit with coaxial probe 28
7.8 Alignment of the sensor housing 28

8 Electrical connection 29

9 Operating and display elements 30

10 Menu 31
10.1 Menu structure 31
10.2 Explanation of the menu 33
10.2.1 Main menu [I] 33
10.2.2 EF level (extended functions) [II] 33
10.2.3 CFG level (configuration) [III] 34
10.2.4 ENV level (environment) [IV] 34
10.2.5 SIM level (simulation) [V] 34

11 Parameter setting 35
11.1 Parameter setting in general 35
11.2 Basic settings (set-up) 37
11.2.1 Entering the type of probe used 37
11.2.2 Enter probe length 37
11.2.3 Setting to the medium 38
11.2.4 Carry out tank adjustment 38
11.3 Configure display (optional) 39
11.4 Setting of output signals 39
11.4.1 Setting of the output function for OUT 1 39
11.4.2 Set the switching limits (hysteresis function) 39
11.4.3 Set the switching limits (window function) 40
11.4.4 Set switch-on delay for switching outputs 40

UK

11.4.5 Set the switch-off delay for switching outputs 40
11.4.6 Setting of the output function for OUT2 40
11.4.7 Scale analogue signal 40
11.4.8 Set output logic for the switching outputs 41
11.4.9 Response of the outputs in case of a fault 41
11.4.10 Set damping for the measured signal 41
11.4.11 Set delay time in case of a fault 41
11.5 Reset all parameters to factory setting 41
11.6 Changing basic settings 42
11.6.1 Change the type of probe used 42
11.6.2 Re-enter the rod length 42
11.6.3 Setting to another medium 42
11.7 Simulation 43
11.7.1 Set simulation value 43
11.7.2 Set simulation duration 43
11.7.3 Switch simulation on / off 43

12 Operation 44
12.1 Operation with single probe 44
12.2 Operation with coaxial probe 44
12.3 Function check 44
12.4 Operation indication 45
12.5 Read the set parameters 45
12.6 Change the display unit in the operating mode 46
12.7 Error indications 46
12.8 Output response in different operating states 47

13 Technical data 47
13.1 Setting ranges 47

14 Maintenance / Transport 48

15 Factory setting 49

16 Notes on parameter setting via IO-Link 50
16.1 Recommended procedure to avoid errors during parameter setting 50
16.2 Unit locking / data storage 51

1 Preliminary note

1.1 Symbols used

▶ Instructions

> Reaction, result

[…] Designation of keys, buttons or indications

→ Cross-reference

Important note
Non-compliance may result in malfunction or interference.

Information
Supplementary note.

UK

2 Safety instructions

- Read this document before setting up the product and keep it during the entire service life.
- The product must be suitable for the corresponding applications and environmental conditions without any restrictions.
- Only use the product for its intended purpose (→ Functions and features).
- Only use the product for permissible media (→ Technical data sheet).
- If the operating instructions or the technical data are not adhered to, personal injury and/or damage to property may occur.
- The manufacturer assumes no liability or warranty for any consequences caused by tampering with the product or incorrect use by the operator.
- Installation, electrical connection, set-up, operation and maintenance of the product must be carried out by qualified personnel authorised by the machine operator.
- Protect units and cables against damage.

3 Items supplied

- 1 LR2050 level sensor
- 1 operating instructions

In addition, the following is necessary for installation and operation (→ Accessories):

- 1 rod (→ 12.1)
- as an option: 1 coaxial pipe (→ 12.2)
- mounting material (if necessary, a launching plate) (→ 12.1)

▶ In the event of incomplete or damaged items supplied please contact ifm electronic.

▶ Only use accessories from ifm electronic.

Accessories: www.ifm.com

The optimum function is not ensured when using components from other manufacturers.

4 Getting started

For the most frequent applications the quick set-up described below is possible. The quick set-up does not replace observance of the other chapters.

▶ Install the unit correctly:
Installation distances (→ 7.1), Electrical connection (→ 8).

▶ Setting the type of probe, probe length and medium (→ 11.2).

> **The unit is ready for operation.**

Without changes = factory settings active (→ 15).

Change of the factory settings (→ 11).

▶ As an option, carry out a tank adjustment (→ 11.2.4).

▶ If necessary, make more settings for adaptation to the application (→ 11.3) and (→ 11.4).

▶ Check whether the unit operates correctly.

5 Functions and features

The unit continuously detects the level in tanks.

5.1 Application area

- Water, water-based media
- Oils, oil-based media (only for operation with coaxial probe)
- Compatible with G ¾ process connections

Application examples:

- Detection of cleaning liquid in a parts cleaning system
- Monitoring of hydraulic oil in a hydraulic power unit (only for operation with coaxial probe)
- Detection of cooling water in an industrial cooling system
- Detection of hot glue in corrugated cardboard manufacture

The unit complies with the standard EN 61000-6-4 and is a class A product.
The unit may cause radio interference in domestic areas. If interference occurs, the user must take appropriate actions.

The microwave energy radiated by the unit is much below that of mobile phones.
According to the current state of science the operation of the unit can be classified to be harmless to human health.

5.2 Restriction of the application area

Incorrect measurements may be caused by the following media:

- Highly absorbing surfaces (e.g. foam).
- Intensely bubbling surfaces.
- Media which are very inhomogeneous, separate from each other thus forming separation layers (e.g. oil layer on water).

▶ Check the function by performing an application test.

▶ Installation in a steady area (→ 7.2.6).

> In case of signal loss, the unit displays [SEnS] and switches the outputs to a defined state (→ 12.8).

- The unit is not suitable for bulk materials (e.g. plastic granulates).

UK

- The unit is not suitable for applications where the rod is subjected to permanent and high mechanical stress (e.g. fast moving viscous media or fast flowing media).
- In case of operation with single probe: use preferably in metal tanks. When used in plastic tanks, deterioration caused by electromagnetic interference may occur (noise immunity to EN61000-6-2).Corrective measures: (→ 7.6.4)
- In case of operation with coaxial probe: not suitable for soiled or viscous media, media containing solid particles and media prone to formation of deposit. Maximum viscosity: 500 mPa · s

6 Function

6.1 Measuring principle

Fig. 6-1	Fig. 6-2
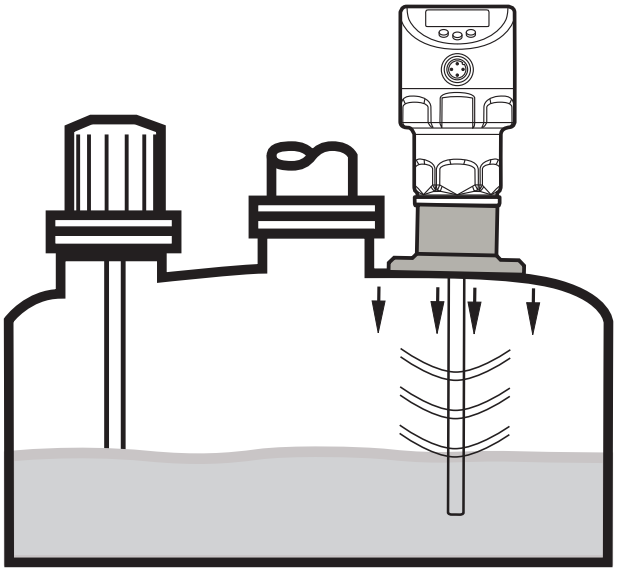	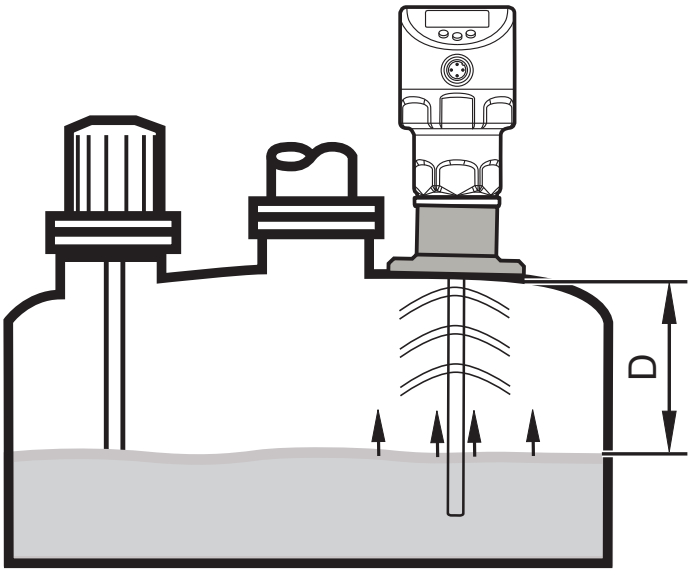

The unit operates on the principle of guided wave radar. It measures the level using electromagnetic pulses in the nanosecond range.

The pulses are transmitted by the sensor head and guided along the rod (fig. 6-1). When they hit the medium to be detected they are reflected and guided back to the sensor (fig. 6-2). The time between transmitting and receiving the pulse directly relates to the travelled distance (D) and the current level. The reference for distance measurement is the lower edge of the process connection.

The figures show the operation with single probe. In case of operation with a coaxial probe, the guided wave runs only along the inside of the coaxial pipe.

6.2 Outputs

The unit generates output signals according to the parameter setting. 2 outputs are available. They can be set separately.

OUT1	Switching signal for level limit value / IO-Link (→ 6.3.7)
OUT2	• Analogue signal proportional to level 4...20 mA / 20...4 mA or • Switching signal for level limit value

6.3 Other features of the unit

UK

- Increased temperature range, increased protection rating (→ Technical data sheet)
- Special operating mode for media with increased foam formation (→ 11.2.3)
- Tank adjustment enables suppression of undesired interference (e.g. caused by structures in the tank or when mounted in a connection piece (→ 11.2.4))
- Display of the level and the switching status via display / LEDs
- IO-Link function (→ 6.3.7)

6.3.1 Display functions

The unit displays the current level, either in mm, inch or in percent of the scaled measuring range. Factory setting: mm

The display unit is defined by programming (→ 11.3).
In the operating mode, the user can switch between the length display (mm / inch) and percentage (→ 12.6).

The set unit of measurement and the switching status of the outputs are indicated by LEDs (→ 9).

6.3.2 Analogue function

The unit provides an analogue signal proportional to the level. The analogue output (OUT2) can be set ((→ 11.4.6) and the following illustrationss).

- [ou2] defines the output function of the analogue output:
  - current output rising ([ou2] = [I]) or
  - current output falling ([ou2] = [InEG]) (→ 11.4.6)
- The analogue start point [ASP2] defines at which measured value the analogue start value*) is provided (→ 11.4.7).
- The analogue end point [AEP2] defines at which measured value the analogue end value*) is provided (→ 11.4.7).

  *) The analogue start value is 4 mA with [ou2] = [I] or 20 mA with [ou2] = [InEG].
  The analogue end value is 20 mA with [ou2] = [I] or 4 mA with [ou2] = [InEG].

Minimum distance between [ASP2] and [AEP2] = 20 % of the active zone.

Curve of the analogue signal (factory setting):

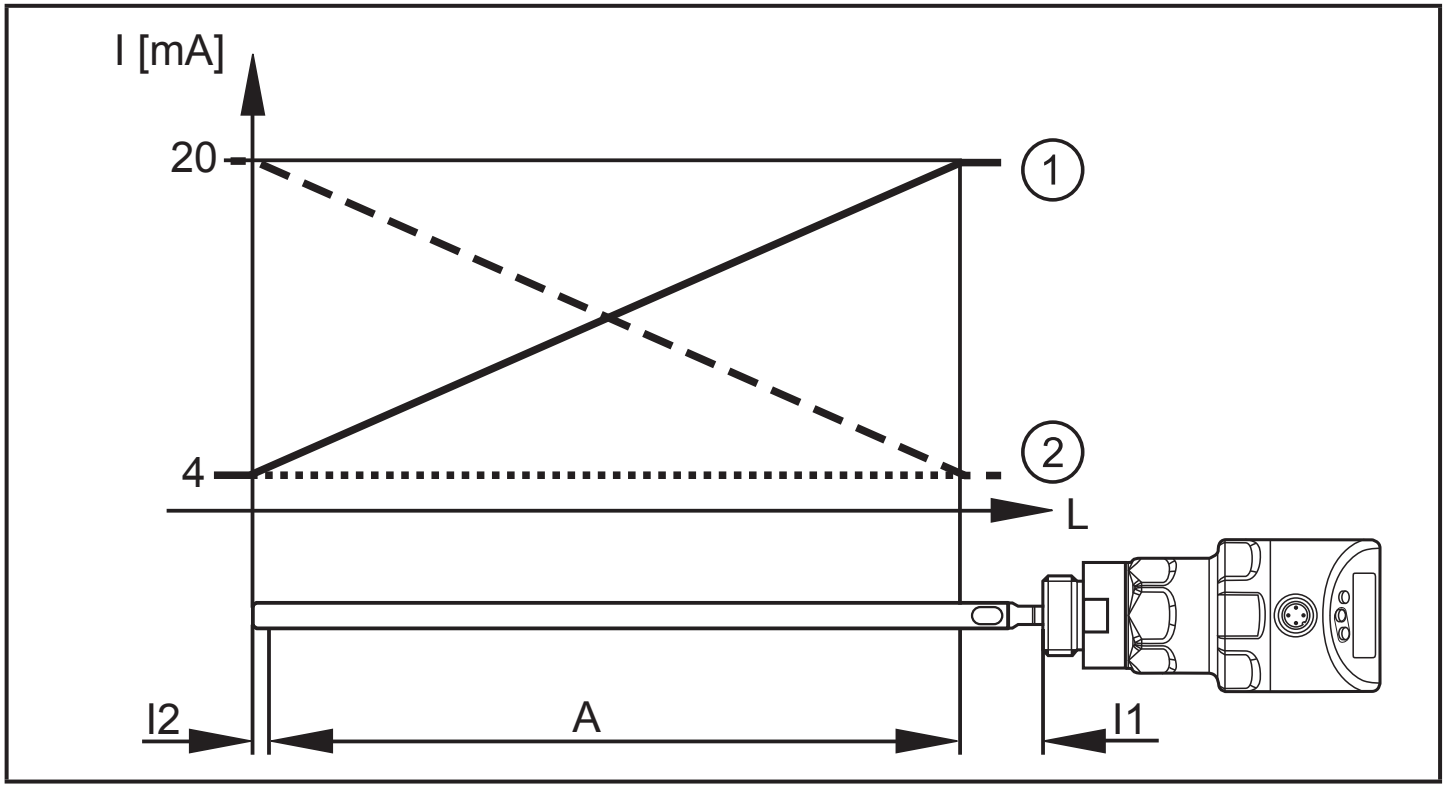

Curve of the analogue signal (measuring range scaled):

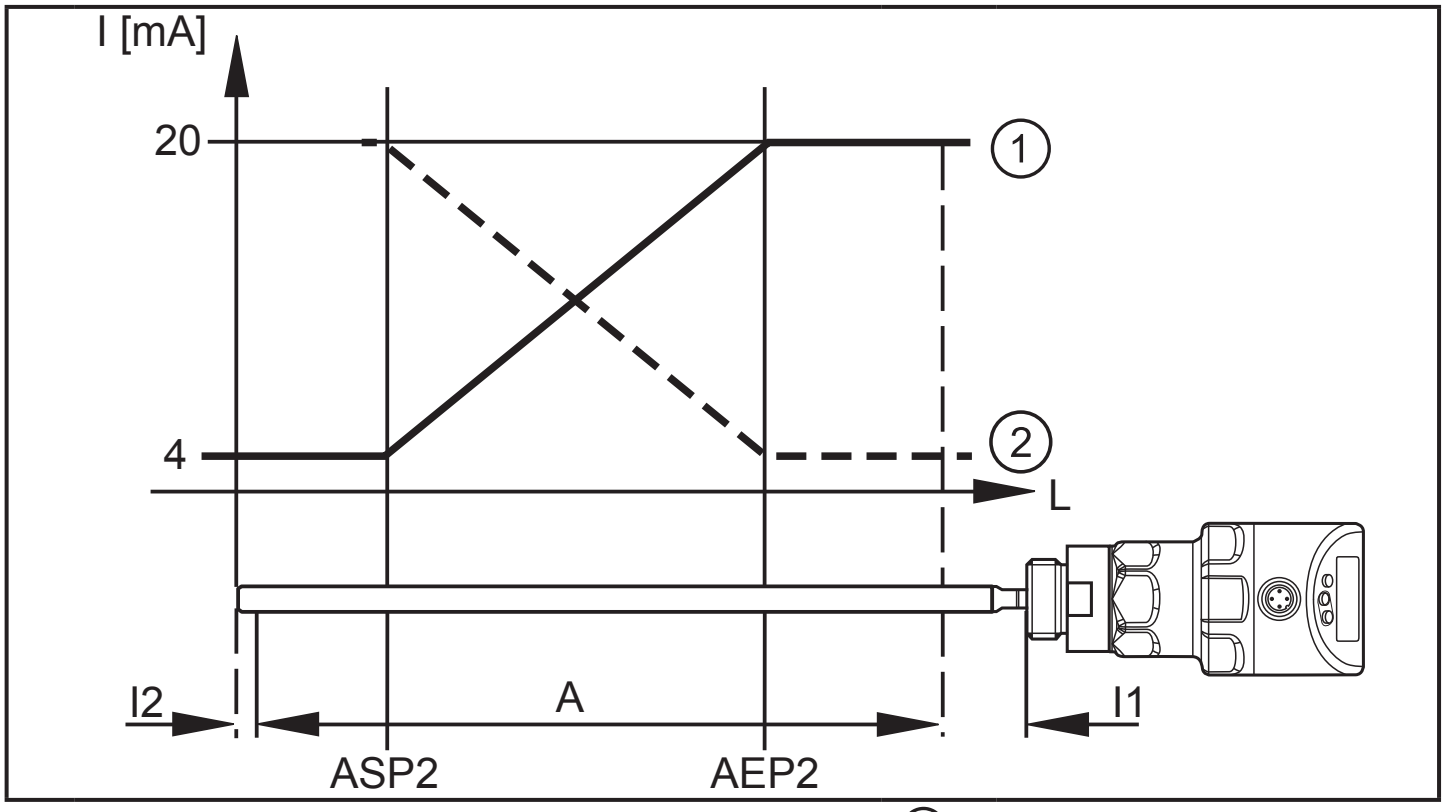

L: Level
A: Active zone = rod length L - (I1 + I2)
I1: Inactive zone 1
I2: Inactive zone 2 (→ Technical data sheet)

①: [ou2] = I (factory setting)
②: [ou2] = [InEG]
ASP2: Analogue start point
AEP2: Analogue end point

Additional information about the analogue output: (→ 12.8)

Note the tolerances and accuracies during the evaluation of the analogue signal (→ Technical data sheet).

UK

6.3.3 Switching functions

Via switching output OUT1 (factory setting) or additionally via OUT2 (can be set) the unit signals that a set limit level has been reached or that the level is below the limit. The following switching functions can be selected:

- Hysteresis function / normally open (fig. 6-3): [oux] = [Hno]
- Hysteresis function / normally closed (fig. 6-3): [oux] = [Hnc]

First the set point (SPx) is set, then the reset point (rPx) with the requested difference.

- Window function / normally open (fig. 6-4): [oux] = [Fno]
- Window function / normally closed (fig. 6-4): [oux] = [Fnc]

The width of the window can be set by means of the difference between FHx and FLx. FHx = upper value, FLx = lower value.

Fig. 6-3	Fig. 6-4
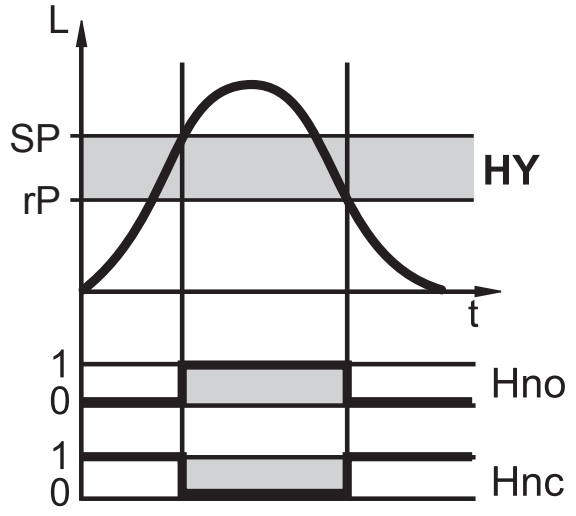	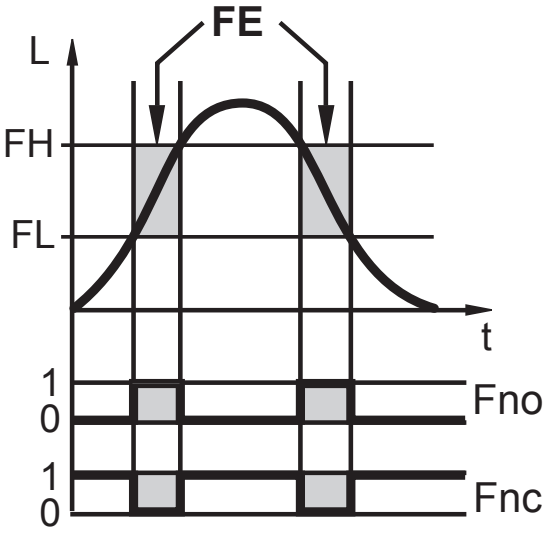

L : Level
HY: Hysteresis
FE: Window

- The adjustable limits (e.g. SP / rP) always refer to the lower edge of the rod.
- For the switching output a switch-on and switch-off delay of max. 60 s can be set (e.g. for especially long pump cycles) (→ 11.4.4).

6.3.4 Damping function

With unsteady level (e.g. turbulence, wave movements...) display and output response may be damped. During damping the determined level values are "smoothed" by means of a mean filter; the result is a steady curve. Damping can be set by means of the parameter [dAP] (→ 11.4.10).

[dAP] indicates in seconds after what time 63 % of the final value are reached in the event of a sudden jump. After 5 x [dAP] almost 100 % have been reached.

6.3.5 Rods for different tank heights

UK

- The unit can be installed in tanks of different sizes. Rods in different lengths are available. To adapt to the tank height, each rod can be shortened. The minimum probe length is 150 mm, the maximum probe length is 2000 mm.
- For ease of installation and removal the rod connection can be rotated without restriction.

6.3.6 Defined state in case of a fault

- In case of a fault a state can be defined for each output.
- If a fault is detected or if the signal quality is below a minimum value, the outputs pass into a defined state, according to NAMUR recommendation in case of the analogue output. For this case the response of the outputs can be set via the parameters [FOU1], [FOU2] (→ 11.4.9).
- Temporary loss of signal caused e.g. by turbulence or foam formation can be suppressed by a delay time (parameter [dFo] (→ 11.4.11)). During the delay time the last measured value is frozen. If the measured signal is received again in sufficient strength within the delay time, the unit continues to work in normal operation. If, however, it is not received again in sufficient strength within the delay time, the outputs pass into the defined state.

In case of heavy foam formation and turbulence, note the examples of how to create a steady area (→ 7.2.6).

6.3.7 IO-Link

This unit has an IO-Link communication interface which requires an IO-Link capable module (IO-Link master) for operation.

The IO-Link interface enables direct access to the process and diagnostic data and provides the possibility to set the parameters of the unit during operation.

In addition, communication is possible via a point-to-point connection with a USB adapter cable.

The IODDs necessary for the unit's configuration, detailed information about process data structure, diagnostic information, parameter addresses and the necessary information about required IO-Link hardware and software can be found at www.ifm.com.

6.3.8 Simulation functions

Various levels and errors can be simulated for set-up, maintenance or interference reduction. The duration of the simulation can be selected (1 min...1 h). The simulation can be started manually and runs until it is stopped manually or the set time elapses. During the simulation the outputs respond according to the simulated process values (→ 11.7) to (→ 11.7.3).

7 Installation

7.1 Installation location / environment

- Vertical installation from the top is preferred.

7.2 Unit with single probe

▶ Observe the notes on tank adjustment (→ 7.2.7).

- Installation preferably in closed, metal tanks or metal bypass pipes
- For installation in open tanks: (→ 7.6.3)
- For installation in plastic tanks: (→ 7.6.4)

7.2.1 Minimum distances and minimum connection piece diameter

Fig. 7-1	Fig. 7-2
	Without adjustment

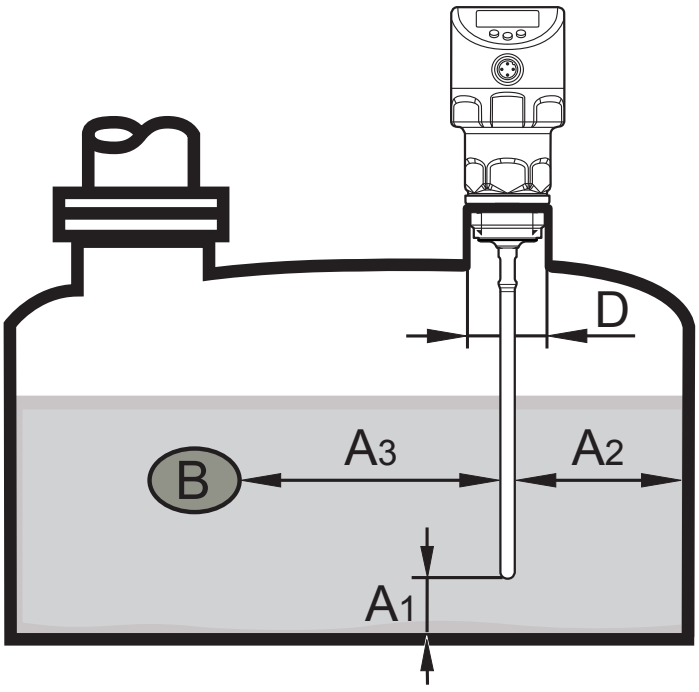

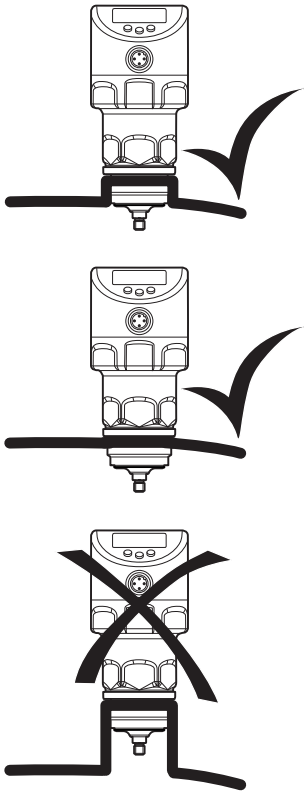

Installation distances with adjustment (→ 7.2.7)		Installation distances without adjustment	
A1:	10 mm	A1:	10 mm
A2:	20 mm	A2:	50 mm
A3:	20 mm to tank structures (B) 50 mm to other sensors type LR	A3:	50 mm to tank structures (B) 50 mm to other sensors type LR
D:	ø 30 mm if installed in a connection piece	D:	No connection piece allowed according to fig. 7-2

7.2.2 Installation in pipes

▶ Only install the unit in metal pipes.

▶ The internal pipe diameter d must at least have the following value:

	With adjustment(→ 7.2.7)	Without adjustment
d	ø 30 mm	ø 100 mm with [MEdI] = [HIGH] ø 250 mm with [MEdI] = [MId] (→ 11.2.3)

Depending on the operating conditions (flow) and mechanical design of the pipe the use of centring pieces is recommended (→ Accessories).

UK

7.2.3 Applications with viscous and fast flowing media

For applications with viscous or flowing media and / or agitators in which the rod is exposed to lateral load:

- ▶ Rod must not be in contact with tank wall / structures.
- ▶ Increase lateral minimum distances according to the rod length and the lateral deflection to be expected.
- ▶ If possible, fix the rod at the tank bottom so that it is electrically conductive. This can be done by means of a sleeve or similar devices (fig. 7-3).
- ▶ Check the correct function (in particular with empty tank).

Fig.. 7-3

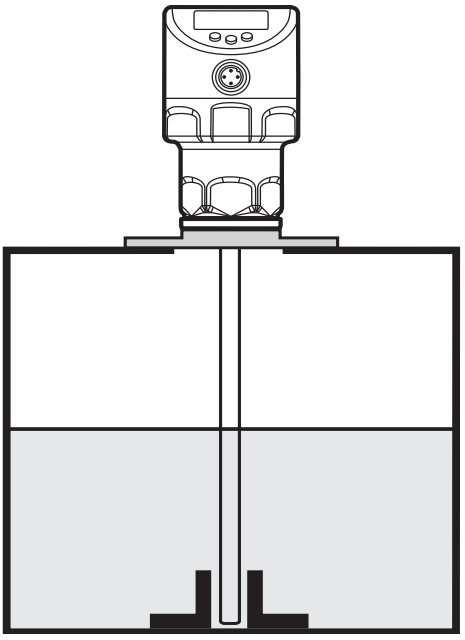

7.2.4 Fill openings

Do not install the unit in the immediate vicinity of a fill opening (fig. 7-4). If possible, install a fill pipe (A) in the tank (fig. 7-5). Keep to the indicated installation distances, if needed carry out tank adjustment.

Fig.. 7-4

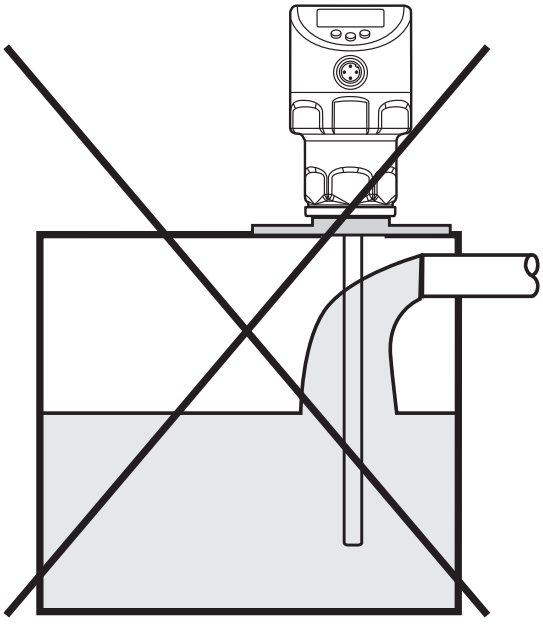

Fig. 7-5

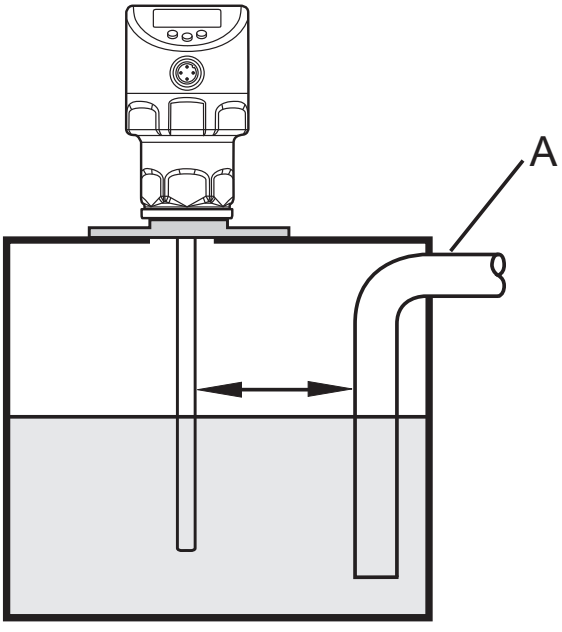

7.2.5 In case of heavy soiling

If the medium is highly polluted, there is the risk that a bridge forms between the rod and the tank wall or structures in the tank.

▶ Increase minimum distances depending on the pollution intensity.

7.2.6 Heavy foam build-up and turbulence

Heavy foam build-up and turbulence may lead to incorrect measurements.

To avoid this

▶ Install the sensor in a steady area.

UK

Examples how to create a steady area:

- Use of a coaxial probe (only for clean, low-viscosity media)
- Installation in metal bypass or metal still pipe (fig. 7-6)
- Separation of the installation location by metal sheets / perforated sheets (without figure)

Fig. 7-6

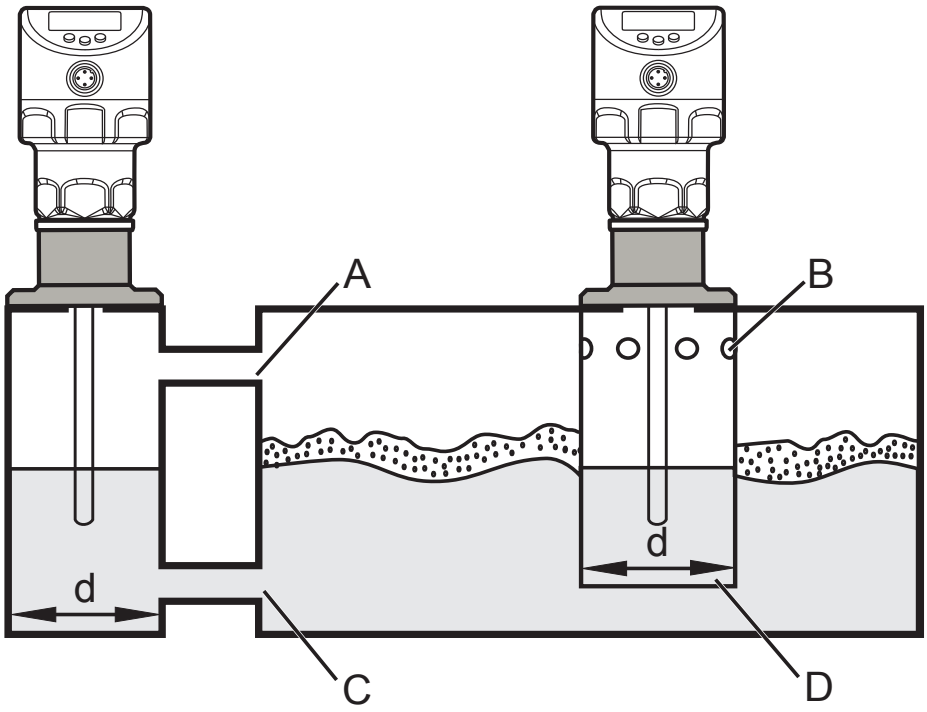

d: Minimum diameter (→ 7.2.2)

The upper access to the steady area (A, B) must be above the max. level. The lower access (C, D) or the area with perforated sheet must be below the min. level. This ensures that neither foam nor turbulence impact the sensor zone. When perforated sheets or similar are used, soiling (e.g. solids in the medium) can also be avoided.

With increased foam formation the setting [MEdI] = [MId] is recommended (→ 11.2.3).

7.2.7 Notes on tank adjustment

Tank adjustment reduces the effect of interference and ensures a higher excess gain in difficult application conditions.

Carry out the tank adjustment only when the unit is installed.

For the tank adjustment it is necessary to enter an "adjustment distance" first. Within this distance, starting from the process connection, interfering reflections are compensated.

- ▶ Select an adjustment distance (a) so that the connection piece (S) and structures in the tank (B) are completely detected.
- ▶ Observe safety distance (b ≥ 250 mm) to the level or the rod end.

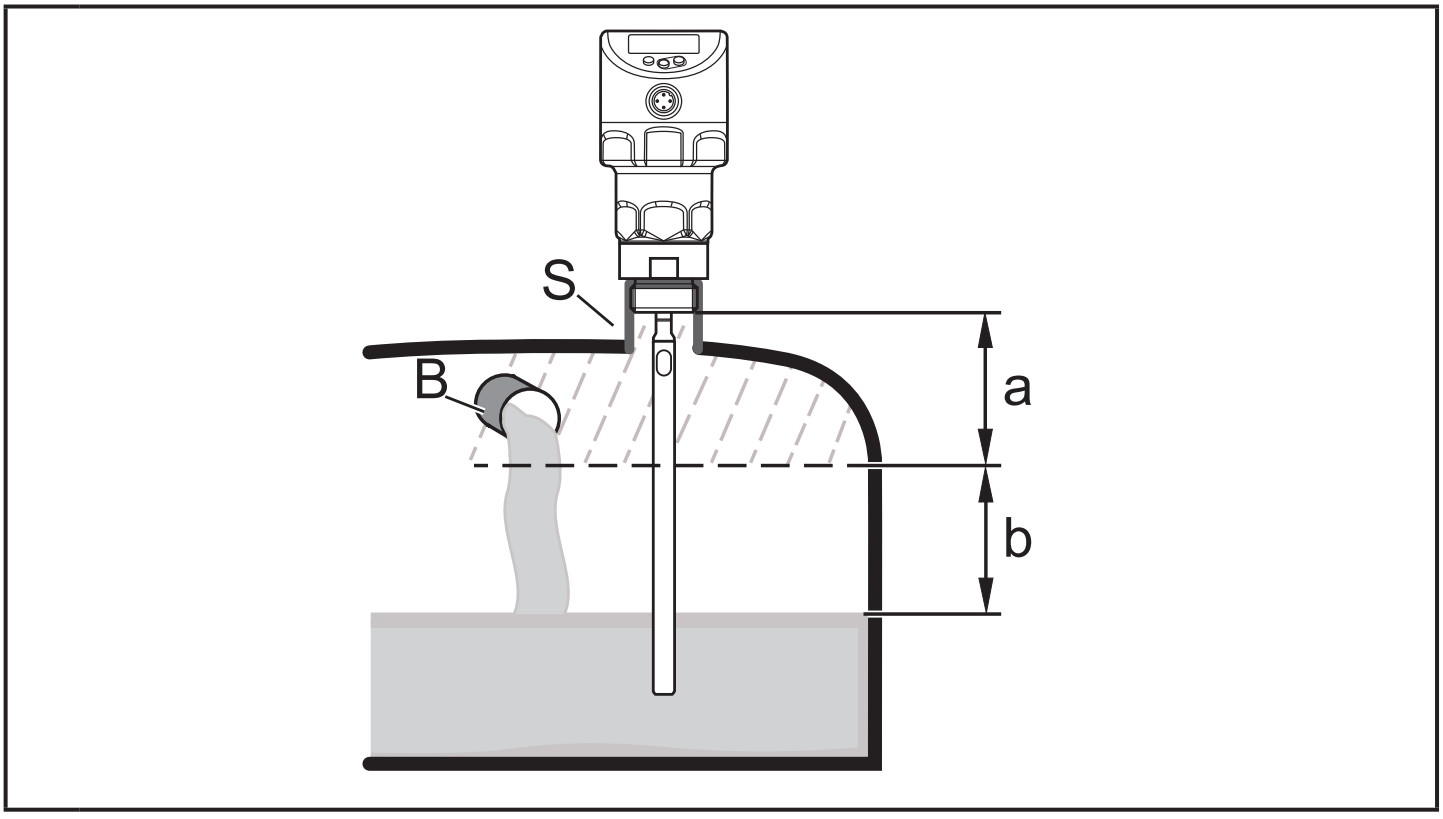

a: Adjustment distance (min: 10 mm; max: L - 250 mm)
b: Safety distance to the level or rod end: b ≥ 250 mm
S: Connection piece
B: Structures in the tank

For probe lengths L < 260 mm no tank adjustment is possible. The parameter [tREF] is then not available. In this case:

- ▶ Adhere to all indicated installation distances (→ 7.2).

No tank adjustment is necessary if all installation distances (→ 7.2) are adhered to. The unit is then ready for operation without tank adjustment.

▶ In case of doubt carry out a tank adjustment (recommended!).

Carry out a tank adjustment with empty tank, if possible, to cover any possible interfering sources. In this case:

▶ Select the max. adjustment distance (L - 250 mm).

Only if data storage is required in an IO-Link application:

The tank adjustment is not saved via IO-Link. After a replacement it must be carried out again.

More information about data storage: (→ 16.2)

UK

7.3 Unit with coaxial probe

- No minimum distances to the tank wall and the baffles (B) are required.
- Minimum distance to the bottom of the tank: 10 mm.
- The vent hole (A) must not be covered by mounting elements or similar.
- Do not install the unit in the immediate vicinity of a fill opening. No water jets must enter into the holes of the coaxial pipe.

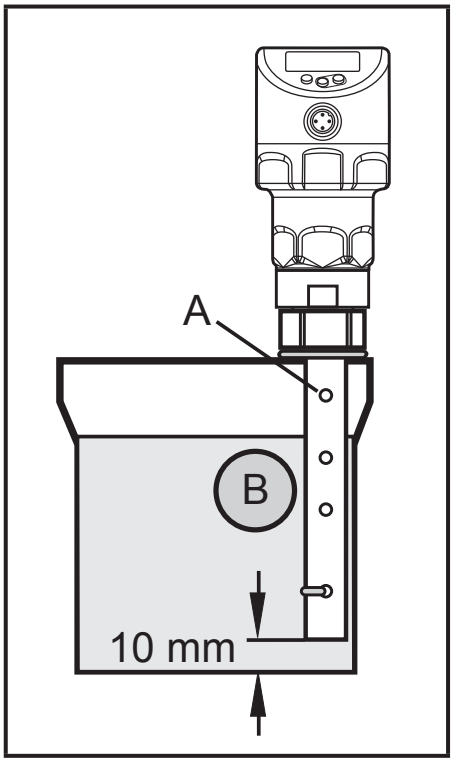

- Note in case of foam formation: The vent of the coaxial pipe must be above the maximum level. The lower edge of the coaxial pipe must be below the minimum level. This stops foam penetrating the coaxial pipe.

7.4 Installation of the rod

The probe is not supplied. It has to be ordered separately (→ 3 Items supplied).

7.4.1 Installation of the rod

Fixing of the rod:

▶ Screw the rod to the unit and tighten it.

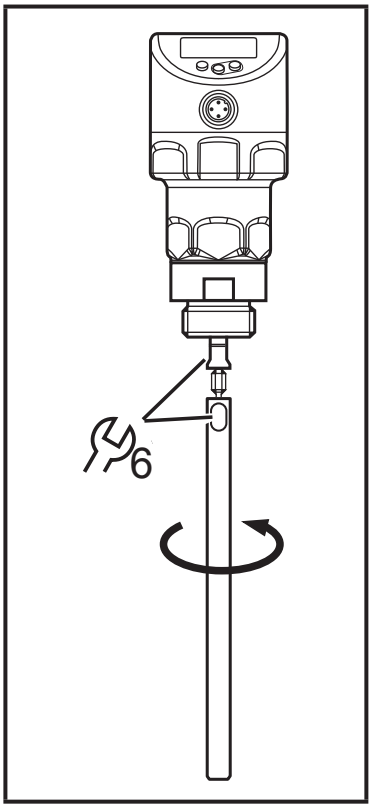

Recommended tightening torque: 4 Nm.

For ease of installation and removal the rod connection can be rotated without restriction. Even if rotated several times there is no risk of damage to the unit.

In case of high mechanical stress (strong vibration, moving viscous media) it may be necessary to secure the screw connection, e.g. by a screw retaining compound.

Substances such as screw retaining compounds may migrate into the medium.

▶ Make sure that they are harmless.

When using mechanical means of securing (e.g. tooth lock washer):

▶ Avoid protruding edges. They may cause interference reflection.

7.4.2 Installation of the coaxial pipe

This subchapter is only relevant if the unit is to be operated with a coaxial probe.

The coaxial pipe and the rod must be of the same end length. The coaxial pipe can be shortened (→ 7.5.2).

- ▶ Screw the rod to the unit and tighten it. Recommended tightening torque: 4 Nm.
- ▶ Slide the supplied flat seal (A) onto the thread. The elastomer seal may remain on the unit.
- ▶ Slide the coaxial pipe (B) onto the rod. Carefully centre it and carefully move the rod through the centring piece (C) (for lengths > 1400 mm through both centring pieces) of the coaxial pipe. Do not damage the centring pieces.
- ▶ Screw onto the sensor thread and tighten.

  Recommended tightening torque: 35 Nm

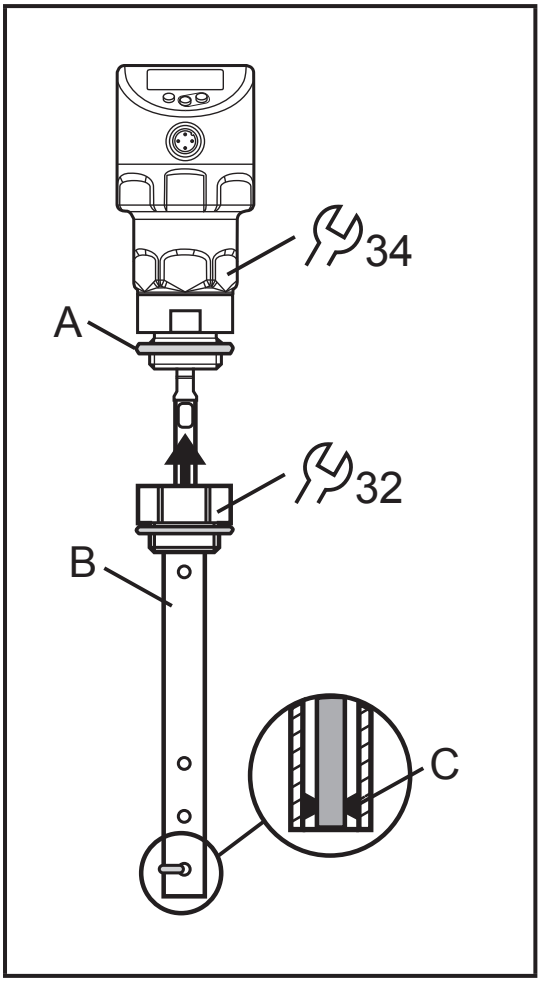

UK

7.5 Rod length

7.5.1 Shortening of the rod

The rod can be shortened to adapt to different tank heights.

Ensure that the rod length is not below the minimum permissible rod length of 150 mm (L_{min}). The unit does not support rod lengths below 150 mm.

For probe lengths < 260 mm no tank adjustment is possible (→ 7.2.7)

Proceed as follows:

- ▶ Screw the rod to the unit.
- ▶ Mark the desired length (L) on the rod. The reference point is the lower edge of the process connection (fig. 7-8).
- ▶ Remove the rod from the unit.
- ▶ Shorten the rod at the mark.
- ▶ Remove all burrs and sharp edges.
- ▶ Screw the rod to the unit again and tighten it. Recommended tightening torque: 4 Nm

Fig. 7-8

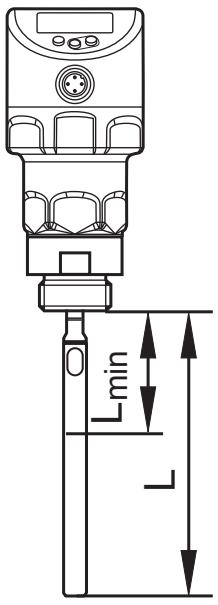

L_{min}= 150 mm

In case of high mechanical stress (strong vibration, moving viscous media) it may be necessary to secure the screw connection, e.g. by a screw retaining compound.

Substances such as screw retaining compounds may migrate into the medium.

- ▶ Make sure that they are harmless.

7.5.2 Determine rod length L for single probes

- ▶ Precisely measure the rod length L. The reference point is the lower edge of the process connection (fig. 7-8).
- ▶ Note the value. It is needed for setting the device parameters (→ 11.2).

7.5.3 Shortening of the coaxial pipe

The coaxial pipe and the rod must be of the same end length:

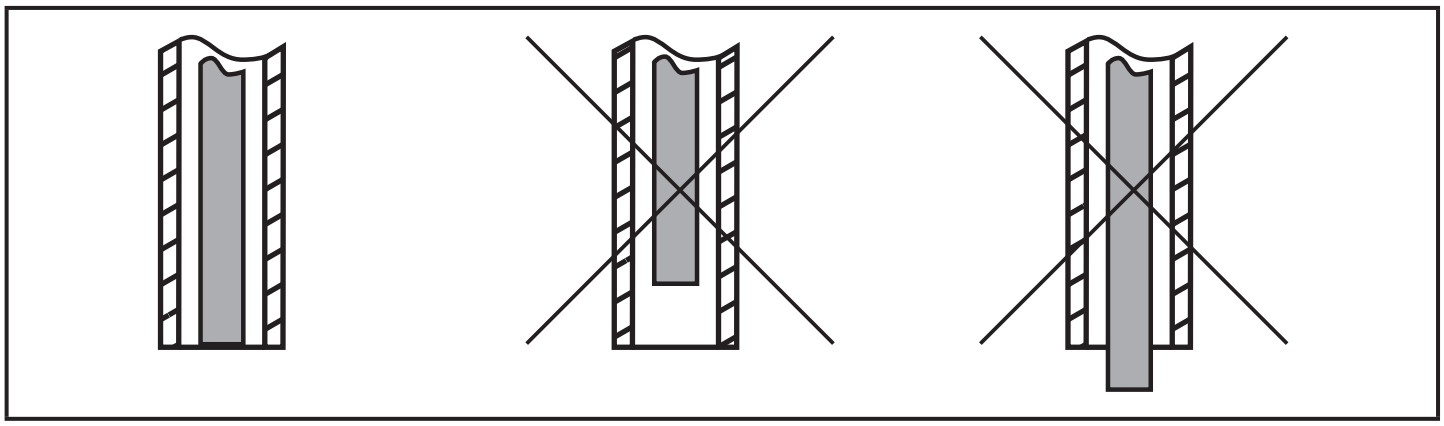

UK

- ▶ Remove fastening bracket and centring piece (A, B).
- ▶ Shorten the coaxial pipe to the requested length: L_K = L + 9 mm
- ▶ After shortening, at least one hole (C) for insertion of the fixing bracket has to be left.
- ▶ Remove all burrs and sharp edges.
- ▶ Insert centring piece (A) at the lower end of the pipe (for lengths > 1400 mm use a second centring piece in the middle of the pipe) and attach it using the fixing bracket (B) at the lower hole (C).

Fig. 7-9

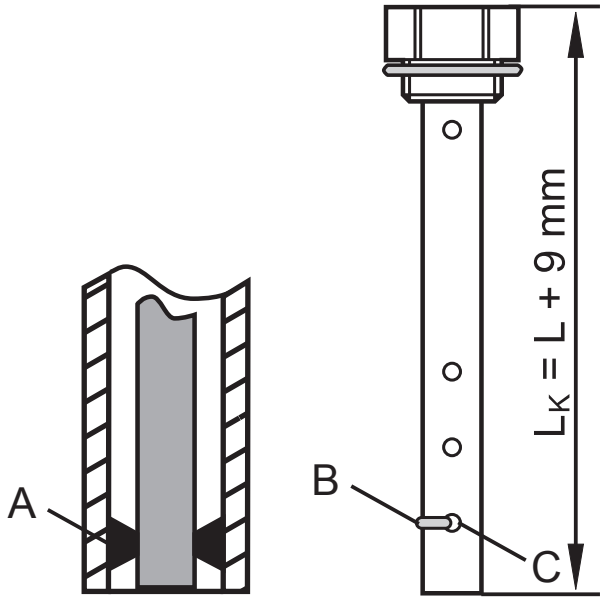

L_K = Length of the coaxial pipe
L = Length of the rod from the lower edge of the process connection (→ 7.5.1)

7.5.4 Determine rod length L for coaxial probes

- ▶ Measure the exact total length L_K of the coaxial pipe (fig. 7-9, on the right).
- ▶ Deduct 9 mm from the total length of the coaxial pipe: L_K – 9 mm = L.
- ▶ Note down L. It is needed for setting the device parameters (→ 11.2).

7.6 Installation of the unit with single probe

Before installing and removing the unit: Make sure that no pressure is applied to the system and that there is no medium in the tank that could leak. Also always take into account the potential dangers related to extreme machine and medium temperatures.

For installation in closed metal tanks, the tank lid serves as a launching plate R (fig. 7-10, fig. 7-12) and (→ 12.1).

Options are as follows:

- Installation to G¾ process connection directly in the tank lid (→ 7.6.1)
- Installation in the tank lid using a flange plate (e.g. for tanks with thin walls) (→ 7.6.2)

During installation of the process connection on the tank lid observe the subsequent orientation of the housing (display orientation, cable outlet). The sensor housing cannot be rotated with respect to the internal thread! Subsequent alignment of the sensor housing is therefore not possible.

Furthermore, installation in open tanks (→ 7.6.3) and plastic tanks

is possible(→ 7.6.4).

7.6.1 Installation to G¾ process connection directly in the tank lid

The elastomer seal on the sensor is used as process seal. The supplied flat seal can be used to smooth out unevenness on the tank lid process connection.

The upper sealing area on the process connection must be flush with the tapped hole.

- ▶ Slightly grease the sensor thread with a suitable paste.
- ▶ Insert the unit into the process connection.
- ▶ Tighten it using a spanner. Tightening torque: 35 Nm

Fig. 7-10

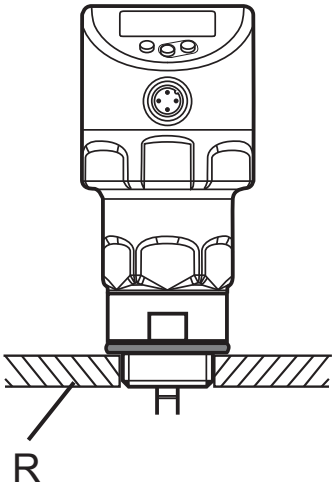

7.6.2 Installation in the tank lid using a flange plate

Fig. 7-11	Fig.. 7-12
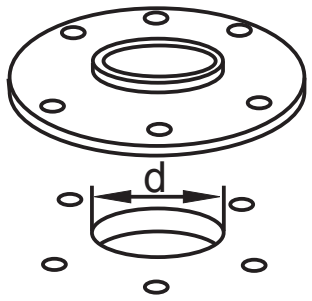	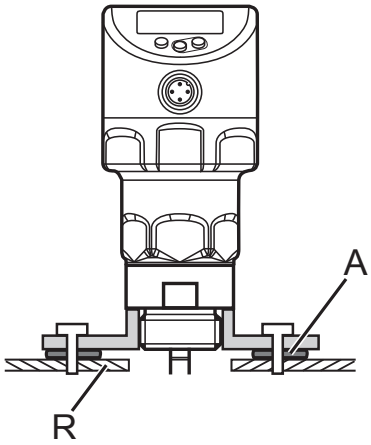

UK

▶ Arrange for a bore hole in the tank lid. It must have a minimum diameter d to enable sufficient transfer of the measured signal to the probe (fig. 7-11). The diameter (d) depends on the wall thickness of the tank lid:

Wall thickness [mm]	1...5	5...8	8...11
d [mm]	35	45	55

▶ Install the flange plate with the flat surface showing to the tank and fix it with appropriate screws.

! If necessary, a seal (A in fig. 7-12) can be inserted between flange plate and tank. Some flange plates are supplied with a seal. If this is not the case, use a suitable seal.

▶ Ensure cleanness and evenness of the sealing areas, especially if the tank is under pressure. Tighten the fixing screws sufficiently.

▶ Slightly grease the sensor thread with a suitable paste.

▶ Insert the unit into the process connection.

▶ Tighten it using a spanner. Tightening torque: 35 Nm

7.6.3 Installation in open tanks

- ▶ For installation in open tanks, use a metal fixture to install the unit. It serves as a launching plate R; minimum size: 150 x 150 mm for a square fixture, 150 mm diameter for a circular fixture (→ 12.1).
- ▶ If possible, mount the unit in the middle of the fixture. Adhere to the specified installation distances according to (→ 7.2), if necessary, carry out a tank adjustment.

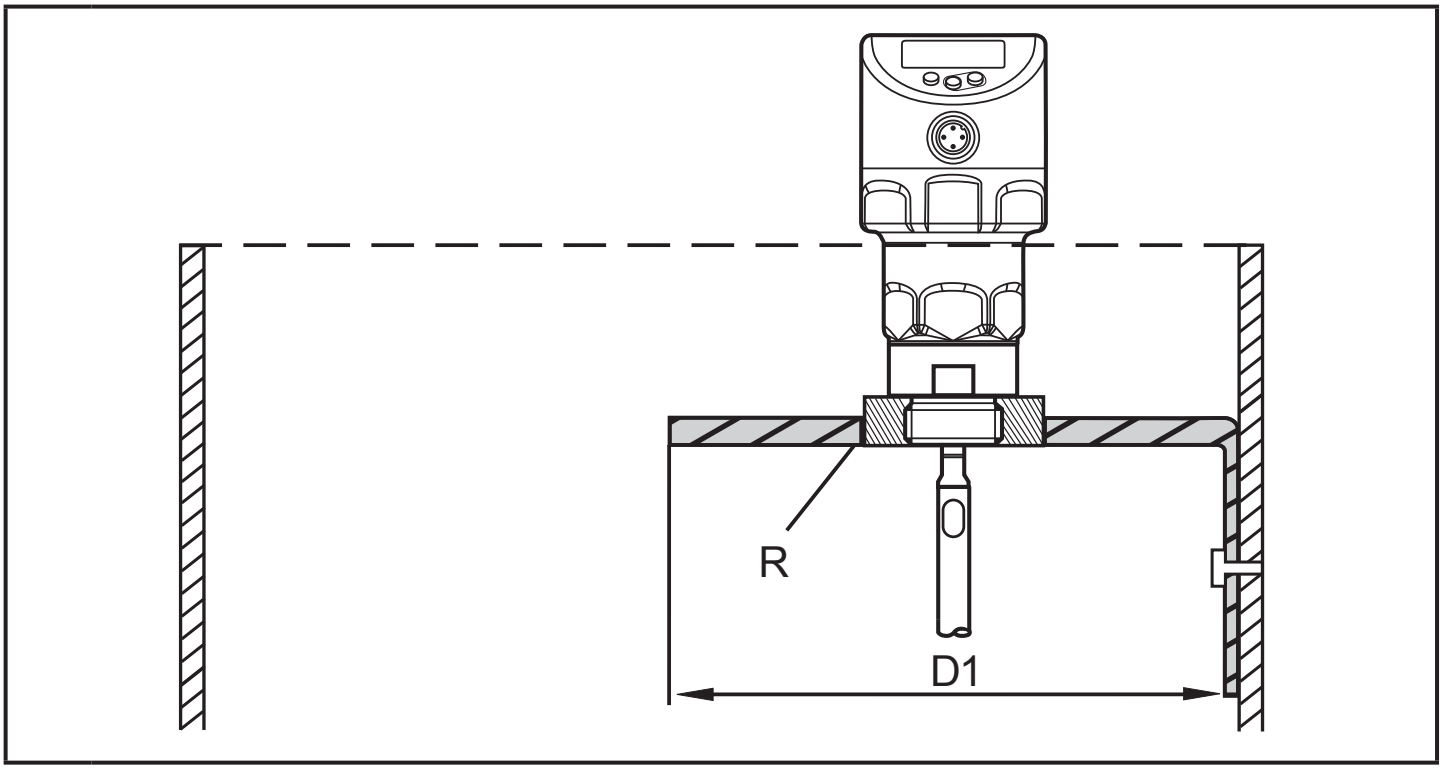

D1: Min. 150 mm.
R: Launching plate

- ▶ Slightly grease the sensor thread with a suitable paste.
- ▶ Insert the unit into the process connection.
- ▶ Tighten it using a spanner. Tightening torque: 35 Nm

7.6.4 Installation in plastic tanks

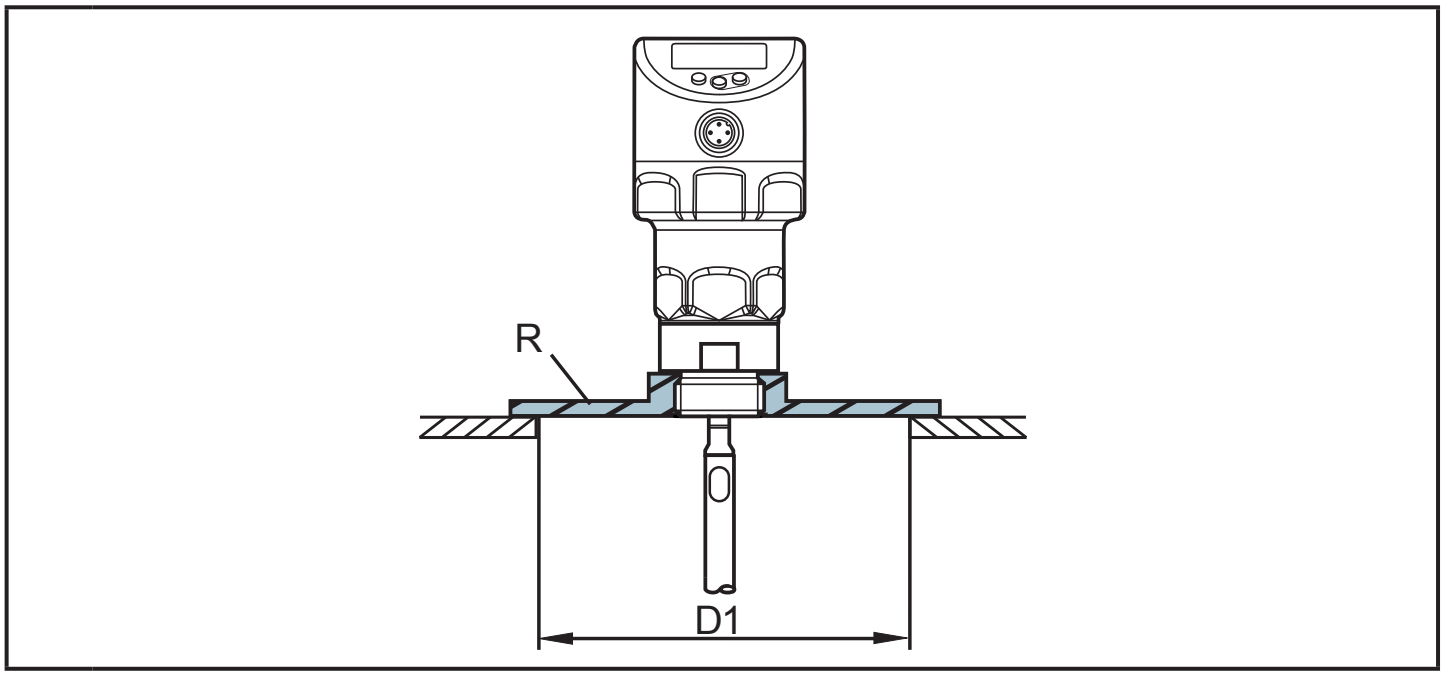

D1: Min. 150 mm
R: Launching plate

To enable sufficient transfer of the measured signal, note in case of installation in plastic tanks or metal tanks with plastic lid:

- ▶ A drill hole with a minimum diameter of 150 mm must be applied to the plastic lid.
- ▶ For installation of the unit, a metal flange plate (= launching plate, R) must be used which sufficiently covers the drill hole (→ 12.1).
- ▶ Ensure a minimum distance (= 80 mm) between the rod and the tank wall. Adhere to the installation instructions (→ 7.2.2) to (→ 7.2.6), if necessary carry out a tank adjustment.

When installed in plastic tanks, there may be deterioration caused by electromagnetic interference from other devices. Corrective measures:

- Apply a metal foil to the outside of the tank.
- Apply a shielding screen between the level sensor and other electronic units.
- Operation with coaxial probe efficiently protects the unit from electromagnetic interference. Observe application area (→ 5.2).

- ▶ Slightly grease the sensor thread with a suitable paste.
- ▶ Insert the unit into the process connection.
- ▶ Tighten it using a spanner. Tightening torque: 35 Nm

UK

7.7 Installation of the unit with coaxial probe

▶ Seal the process connection:

- For coaxial pipes with G¾ process connection:
  Slide the supplied seal onto the thread of the coaxial pipe.
- For coaxial pipes with ¾" NPT process connection: Apply a suitable sealing material (e.g. PTFE tape) to the thread of the coaxial pipe.

▶ Insert the unit with the coaxial pipe into the tank.

▶ Tighten it using a spanner. Tightening torque: 35 Nm

7.8 Alignment of the sensor housing

The sensor housing cannot be rotated with respect to the internal thread! Subsequent alignment of the sensor housing is therefore not possible.

Therefore, the subsequent orientation of the housing (display orientation, cable outlet) must be observed during installation of the process connection on the tank lid.

8 Electrical connection

The unit must be connected by a qualified electrician.
The national and international regulations for the installation of electrical equipment must be adhered to.

Voltage supply according to EN 50178, SELV, PELV.

For marine applications (if approval available for the device), additional surge protection is required.

▶ Disconnect power.

▶ Connect the unit as follows:

UK

Core colours	
BK	Black
BN	Brown
BU	Blue
WH	White

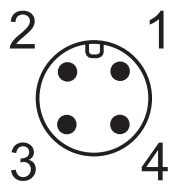

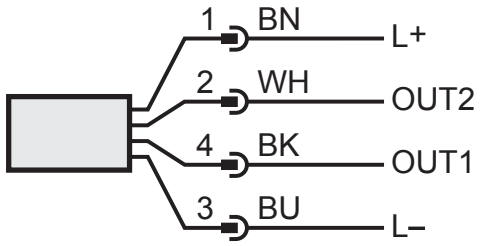

OUT1: Switching output / IO-Link
OUT2: Analogue output or switching output
Colours to DIN EN 60947-5-2

Example circuits

2 x positive switching

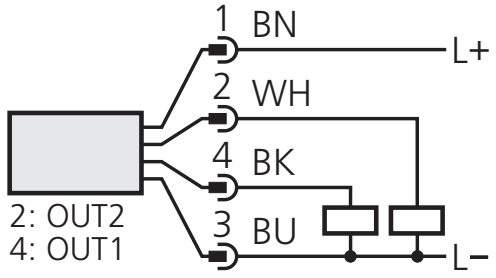

2 x negative switching

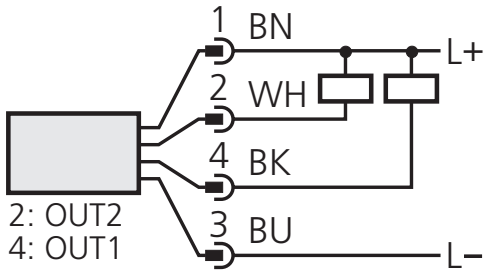

1 x positive switching / 1 x analogue

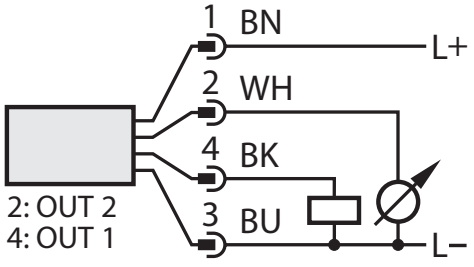

1 x negative switching / 1 x analogue

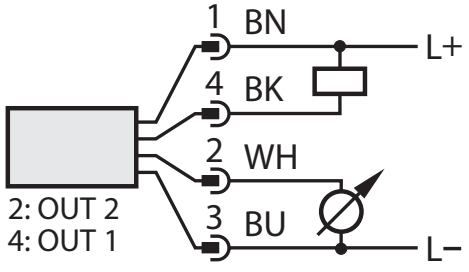

When operating voltage is applied to the unit for the first time, the basic settings must be entered first (→ 11.2). Only then is the unit ready for operation.

9 Operating and display elements

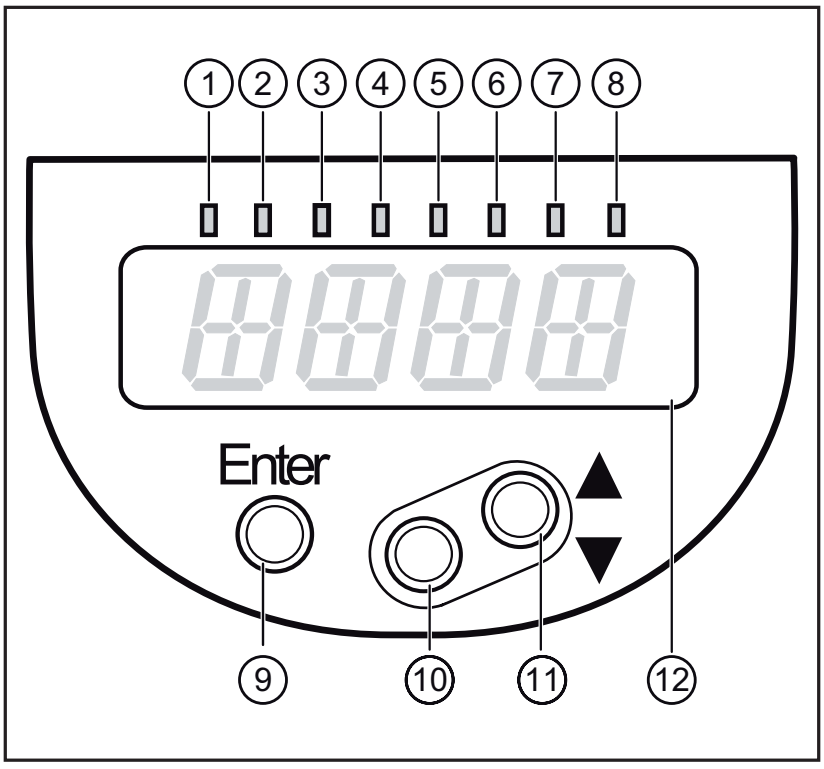

1 to 8: Indicator LEDs	
LEDs 1 - 3	Selected unit of measurement.
LEDs 4 - 6	Not used.
LED 7	Only active if the switching output [ou2] = [I] or [InEG] is selected; then: Switching status OUT2 (on when output 2 is switched).
LED 8	Switching status OUT1 (on when output 1 is switched).
9: [Enter] button	
- Open the user menu. - Edit and confirm the parameter values.	
10 to 11: Arrow keys up [▲] and down [▼]	
- Selection of the parameters. - Setting of the parameter values (continuously by holding pressed; incrementally by pressing once).	
12: Alphanumeric display, 4 digits	
- Display of the current level. - Indication of the parameters and parameter values.	

10 Menu

10.1 Menu structure

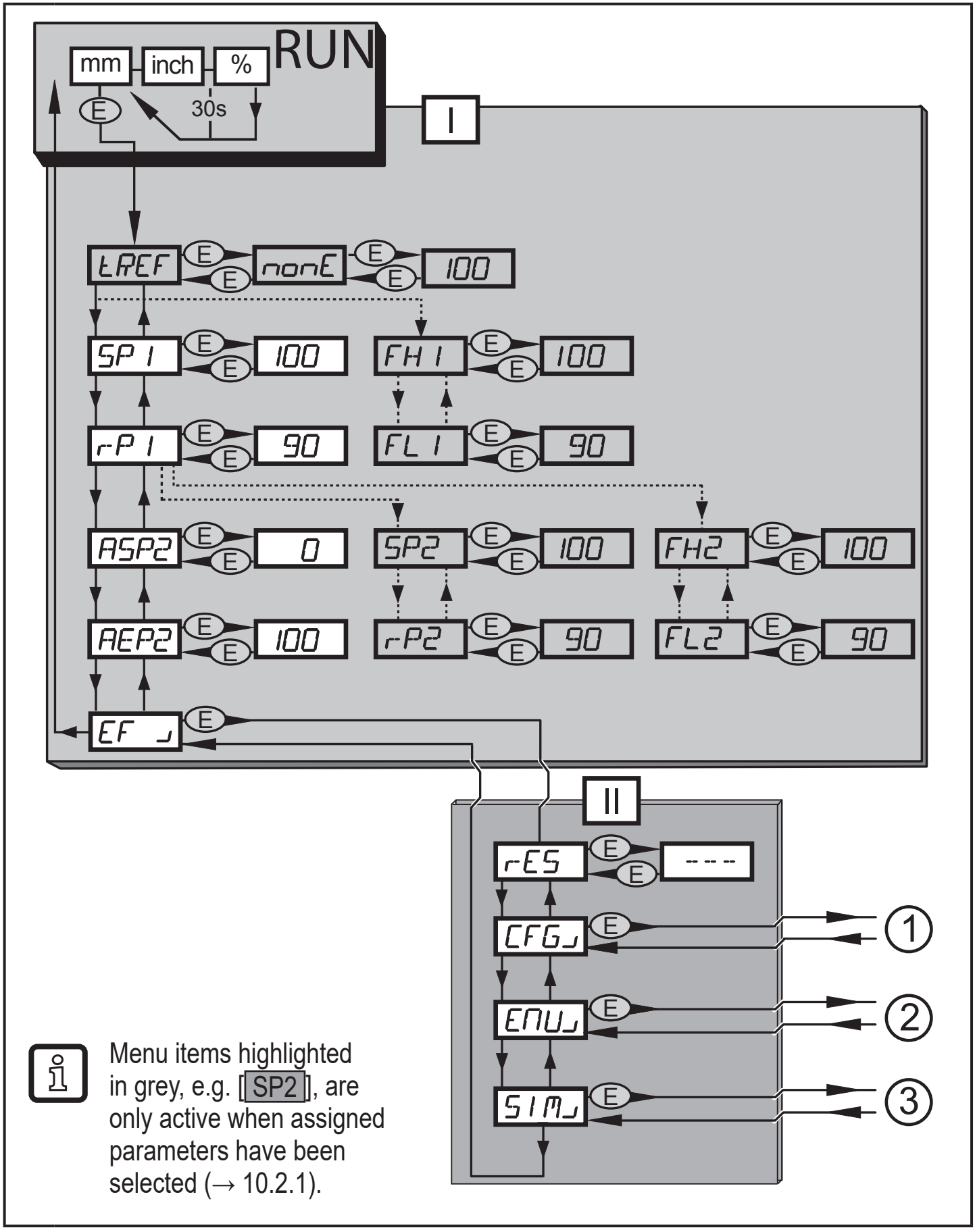

I: Main menu (→ 10.2.1)
II: EF Level (→ 10.2.2)

UK

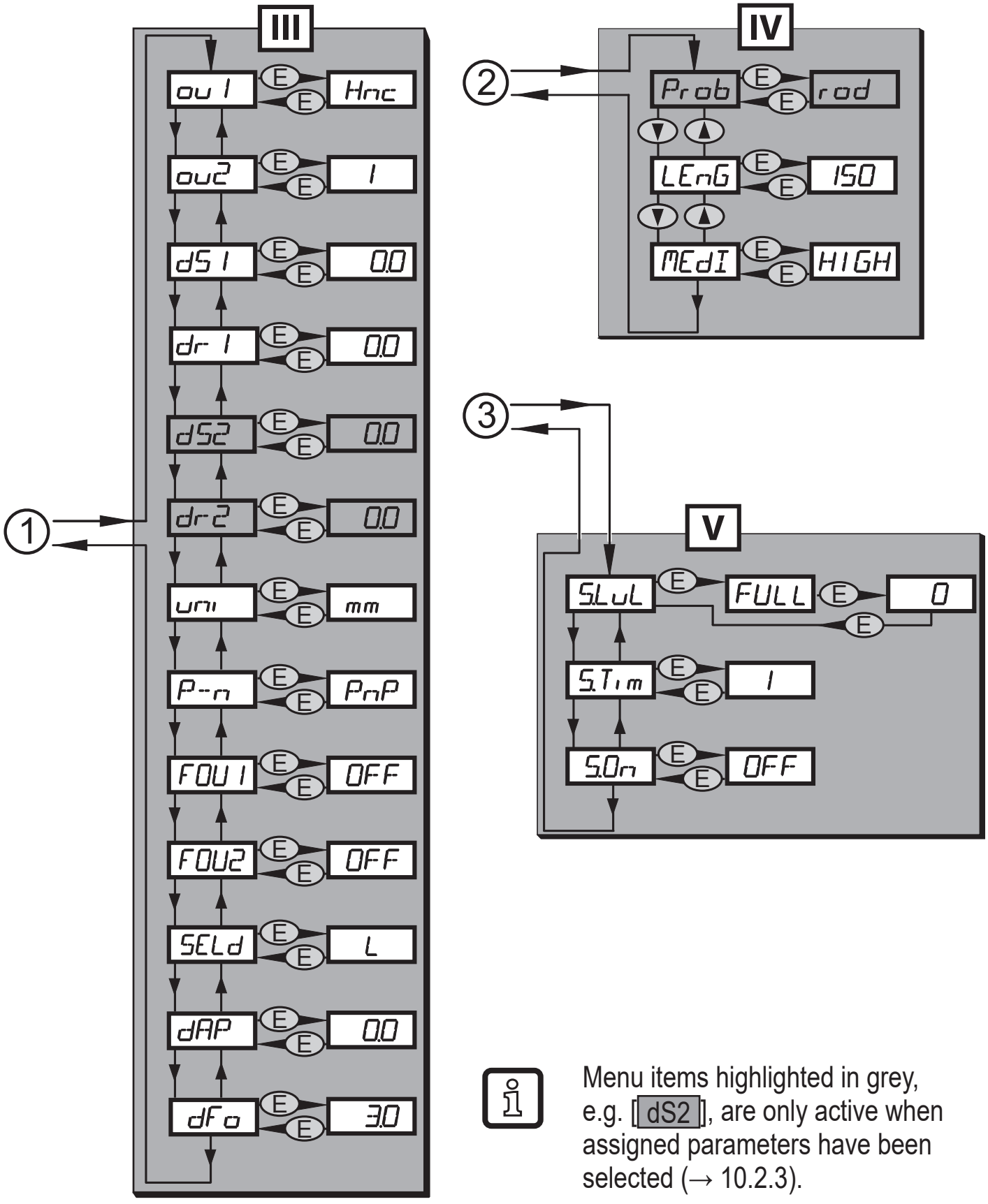

III : CFG level (→ 10.2.3)
IV: ENV level (→ 10.2.4)
V: SIM level (→ 10.2.5)

10.2 Explanation of the menu

10.2.1 Main menu [I]

tREF	Carry out tank adjustment. Menu item only visible if [LEnG] ≥ 260 mm and [Prob] = [rod]
SP1 / rP1	Set point 1 / reset point at which OUT1 switches. Menu item only visible if hysteresis function is selected ([ou1] = [H..])
FH1 / FL1	Upper / lower limit for the acceptable range within which OUT1 switches. Menu item only visible if window function is selected ([ou1] = [F..])
ASP2	Analogue start point 2: Measured value at which the analogue start value is provided. The analogue start value is set with parameter [ou2]. Menu item only visible if analogue output is selected ([ou2] = [I] or [InEG])
AEP2	Analogue end point 2: Measured value at which the analogue end value is provided. The analogue end value is set with parameter [ou2]. Menu item only visible if analogue output is selected ([ou2] = [I] or [InEG])
SP2 / rP2	Set point 2 / reset point 2 at which OUT2 switches. Menu item only visible if hysteresis function is selected ([ou1] = [H..])
FH2 / FL2	Upper / lower limit for the acceptable range within which OUT2 switches. Menu item only visible if window function is selected ([ou1] = [F..])
EF ⌟	Extended functions / opening of menu level 2

10.2.2 EF level (extended functions) [II]

rES	Restore factory setting
CFG⌟	Open the submenu CFG (configuration)
ENV⌟	Open the submenu ENV (environment parameter)
SIM⌟	Open the submenu SIM (simulation)

UK

10.2.3 CFG level (configuration) [III]

ou1	Output configuration for OUT1: • Switching signal for level limit value. Hysteresis or window function, normally closed or normally open
ou2	Output configuration for OUT2: • Analogue signal for current level, 4…20 mA or 20…4 mA or • Switching signal for level limit value. Hysteresis or window function, normally closed or normally open
dS1	Switch-on delay for OUT1
dr1	Switch-off delay for OUT1
dS2*)	Switch-on delay for OUT2
dr2*)	Switch-off delay for OUT2
uni	Selection of the unit of measurement on the sensor display (mm or inch)
P-n	Output polarity for the switching outputs (pnp or npn)
FOU1	Response of OUT1 in case of a fault
FOU2	Response of OUT2 in case of a fault
SELd	Selection of the type of indication
dAP	Damping of the measured signal (mean filter)
dFo	Delay time for the outputs to pass into the state defined with [FOUx]; only effective in case of a fault.
*) Menu item only visible with hysteresis or window function ([ou2] = [H..]) or [°F..]).	

10.2.4 ENV level (environment) [IV]

Prob*	Input of the type of probe (single probe or coaxial probe)
LEnG	Input of the rod length
MEdI	Medium selection
* Menu item only visible if [MEdI] = [HIGH] or [MId].	

10.2.5 SIM level (simulation) [V]

S.LvL	Simulation of a level / an error state
S.Tim	Simulation duration 1...60 min
S.On	Simulation start/stop

11 Parameter setting

During parameter setting the device remains in the operating mode. It continues its monitoring functions with the existing parameters until the parameter setting has been completed.

11.1 Parameter setting in general

1	**Select parameter** ▶ Press [Enter] to get to the menu. ▶ Press [▲] or [▼] until the required parameter is displayed.	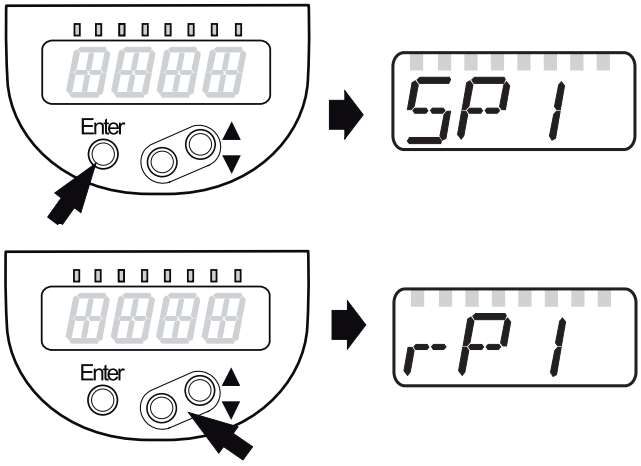
2	**Set parameter value** ▶ Press [Enter] to edit the selected parameter. ▶ Press [▲] or [▼] for min. 1 s. > After 1 s: setting value is changed: Incrementally by pressing the button once or continuously by keeping the button pressed.	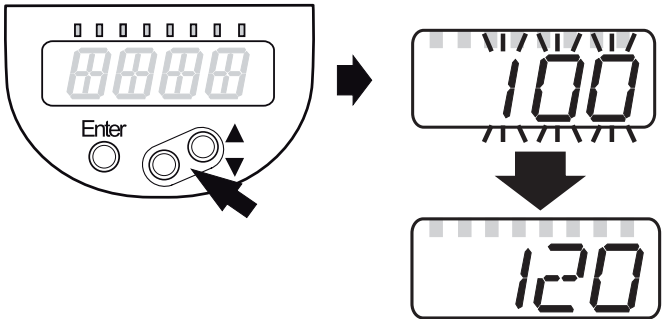
	Numerical values are incremented continuously with [▲] or decremented with [▼].	
3	**Acknowledge parameter value** ▶ Press [Enter]. > The parameter is displayed again. The new setting value is saved.	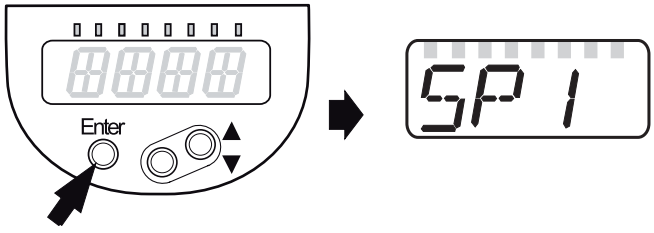
Set other parameters ▶ Press [▲] or [▼] until the required parameter is displayed.		
Finish parameter setting ▶ Press [▲] or [▼] several times until the current measured value is displayed or wait for 30 s. > The unit returns to the process value display.		

[C.Loc] or [S.Loc] as operation indication see (→ 12.7)

UK

- Change from menu level 1 to menu level 2:

▶ Press [Enter] to get to the menu. ▶ Press [▲] or [▼] until [EF] is displayed.	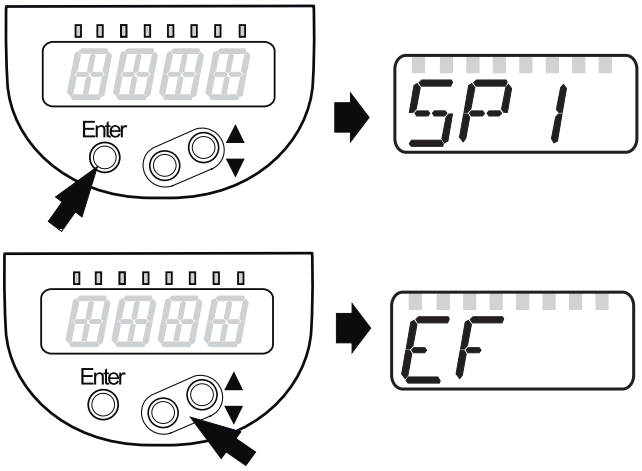
▶ Press [Enter]. > The first parameter of the submenu is displayed (here: [rES]).	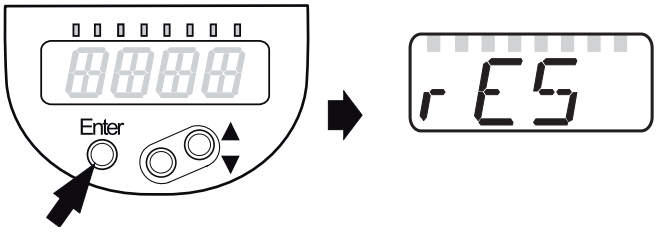

- Timeout:

If no button is pressed for 30 s during parameter setting, the unit returns to the process value display with unchanged values.

- Locking / unlocking
  The unit can be locked electronically to prevent unintentional settings. Factory setting: not locked.

▶ Make sure that the device is in the normal operating mode. ▶ Press [▲] + [▼] simultaneously for 10 s. > [Loc] is displayed.	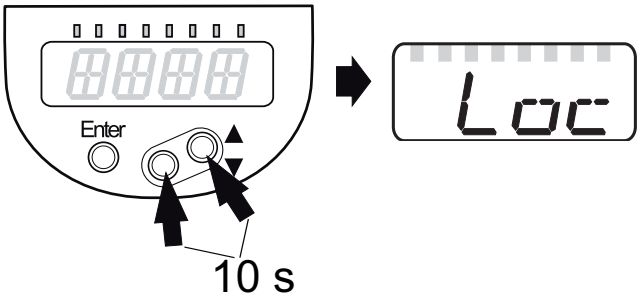
During operation: [Loc] is briefly displayed if you try to change parameter values.	
For unlocking: ▶ Press [▲] + [▼] simultaneously for 10 s. > [uLoc] is displayed.	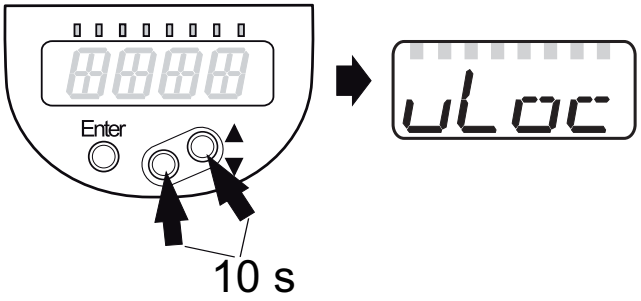

11.2 Basic settings (set-up)

On delivery of the unit, you must first enter the basic settings. The complete user menu then opens.

11.2.1 Entering the type of probe used

▶ Apply operating voltage. > The initial display ---- is shown. ▶ Select [Prob] and set: ▶ Press [Enter]. > [nonE] is displayed. ▶ Press [▲] or [▼] for min. 1 s and set the value: [rod] = Single probe, for the detection of: - water and water-based media. [COAX] = Coaxial probe, for the detection of: - oils and oil-based media. - water and water-based media. ▶ Press [Enter]. • The detection of water and water-based media is possible with the single probe as well as with the coaxial probe. • The detection of oils and oil-based media is only possible with the coaxial probe.	Prob

11.2.2 Enter probe length

▶ Select [LEnG]. ▶ Press [Enter]. > [nonE] is displayed. ▶ Press [▲] or [▼] for min. 1 s. > After 1 s the unit automatically displays the detected rod length (preset function*). ▶ Correct the rod length, if necessary, with [▲] or [▼]. Incrementally by pressing the button once or continuously by keeping the button pressed. Enter the rod length in mm. ▶ Press [Enter].	LEnG
*) Automatic rod length detection is only possible with empty tank and sufficiently large launching plate. For manual determination of the rod length: (→ 7.5.2)	

UK

11.2.3 Setting to the medium

▶ Select [MEdI] and set: [HIGH] = For water and water-based media. Operating mode is optimised for suppression of deposits on the rod. [MId] = For water-based media and media with a medium dielectric constant value, e.g. water-in-oil emulsions. Operating mode optimised for the detection of media with increased foam build-up. [LOW] = For oils and oil-based media Note: Option only visible if [Prob] = [COAx] ▶ Press [Enter]. ▶ Check proper function by an application test.	MEdI

Then the unit changes to the operating mode.

If required (e.g. when mounted in a connection piece) carry out a tank adjustment (parameter [tREF]) and set parameters to adapt to the application.

Setting ranges of all parameters: (→ 13.1)

Factory settings of all parameters: (→ 15)

11.2.4 Carry out tank adjustment

Menu item only visible if [LEnG] ≥ 260 mm and [Prob] = [rod]. ▶ Observe notes (→ 7.2.7). ▶ Select [tREF]. ▶ Press [Enter]. > [nonE] or the value stored by the last tank adjustment (distance value) is displayed. ▶ Press [▲] or [▼] for min. 1 s. > The distance value is displayed (default value: 10 mm). ▶ Correct the value, if necessary, with [▲] oder [▼]. Incrementally by pressing the button once or continuously by keeping the button pressed. ▶ Press [Enter]. > [donE] is displayed. ▶ Press [Enter] again. > The unit reboots and then returns to the operating mode.	tREF

11.3 Configure display (optional)

▶ Select [uni] and set the unit of measurement: [mm], [inch]. Factory setting: mm. ▶ Select [SELd] and set type of indication: [L] = The level is indicated in mm or inch. [%] = The level is indicated in percent of the measuring range / scaled measuring range. The level in percent depends on the parameters: [ASP2]: Set value corresponds to 0 % [AEP2]: Set value corresponds to 100 % [OFF] = The display is switched off in the operating mode. When one of the buttons is pressed, the current measured value is displayed for 30 s. The indicator LEDs remain active even if the display is deactivated.	uni SELd

UK

11.4 Setting of output signals

11.4.1 Setting of the output function for OUT 1

▶ Select [ou1] and set the switching function: [Hno] = Hysteresis function / normally open [Hnc] = Hysteresis function / normally closed [Fno] = Window function / normally open [Fnc] = Window function / normally closed Note: If the switching output is used as an overflow prevention, the setting [ou1] = [Hnc] (normally closed function) is recommended. The principle of normally closed operation ensures that wire break or cable break is also detected.	ou 1

11.4.2 Set the switching limits (hysteresis function)

▶ Make sure that the function [Hno] or [Hnc] is set for [oux]. Note: [I] is preset by the factory for [ou2], in this case [SP] / [rP] are not available. ▶ Select [SPx] and set the value at which the output is set.	SP 1 SP2
▶ Select [rPx] and set the value at which the output is reset. [rPx] is always smaller than [SPx]. The unit only accepts values which are lower than the value for [SPx].	rP 1 rP2

11.4.3 Set the switching limits (window function)

▶ Make sure that for [oux] the function [Fno] or [Fnc] is set. ▶ Select [FHx] and set the upper limit of the acceptable range.	FH1 FH2
▶ Select [FLx] and set the lower limit of the acceptable range. [FLx] is always lower than [FHx]. The unit only accepts values which are lower than the value for [FHx].	FL1 FL2

11.4.4 Set switch-on delay for switching outputs

▶ Select [dSx] and set the value between 0.0 and 60 s. The switch-on delay reacts according to VDMA*).	dS1 dS2

11.4.5 Set the switch-off delay for switching outputs

▶ Select [drx] and set the value between 0.0 and 60 s. The switch-off delay reacts according to VDMA*).	dr-1 dr-2

*) According to VDMA the switch-on delay always has an effect on SP, the switch-off delay always on rP irrespective of whether the normally open or normally closed function is used.

11.4.6 Setting of the output function for OUT2

▶ Select [ou2] and set the switching function: [I] = Current output 4...20 mA [InEG] = Current output 20...4 mA [Hno] = Hysteresis function / normally open [Hnc] = Hysteresis function / normally closed [Fno] = Window function / normally open [Fnc] = Window function / normally closed Note: If the switching output is used as an overflow prevention, the setting [ou2] = [Hnc] (normally closed function) is recommended. The principle of normally closed operation ensures that wire break or cable break is also detected.	ou2

11.4.7 Scale analogue signal

▶ Select [ASP2] and set the analogue start point. ▶ Select [AEP2] and set the analogue end point. These parameters can only be set via an IO-Link device tool if the parameter [ou2] is set to [I] or [InEG]. More information: (→ 6.3.2)	ASP2 AEP2

11.4.8 Set output logic for the switching outputs

▶ Select [P-n] and set [PnP] or [nPn].	P--n

11.4.9 Response of the outputs in case of a fault

▶ Select [FOU1] / [FOU2] and set the value: [On] = Output switches ON in case of a fault Analogue output switches to a value > 21 mA in case of a fault [OFF] = Switching output switches OFF in case of a fault Analogue output switches to a value < 3.6 mA in case of a fault. Examples of faults: defective hardware, signal quality too low. Overflow is not considered to be a fault!	FOU1 FOU2

UK

11.4.10 Set damping for the measured signal

▶ Select [dAP] and set damping in seconds; Setting range: 0.0...60.0 s ▶ More information: (→ 6.3.4).	dAP

11.4.11 Set delay time in case of a fault

▶ Select [dFo] and set a value between 0...10.0 s. [dFo] only effective in case of a fault. Mind the dynamics of your application. In case of fast level changes it is recommended to adapt the value step by step. More information: (→ 6.3.6)	dFo

11.5 Reset all parameters to factory setting

▶ Select [rES]. ▶ Press [Enter] until [rES] is aligned right. ▶ Press and hold [▲] or [▼] until [----] is displayed. ▶ Press [Enter]. > The unit reboots and the factory settings are restored. Note: On delivery the unit is not operational. First, the first set-up must be made (→ 11.2).	rES

11.6 Changing basic settings

Required after changes to the rod or application.

11.6.1 Change the type of probe used

Menu item only visible if [MEdI] = [HIGH] or [MId]. ▶ Select [Prob]. ▶ Press [Enter]. ▶ Press [▲] or [▼] for min. 1 s and set the value: [rod] = Single probe [COAX] = Coaxial probe ▶ Press [Enter]. More information: (→ 11.2.1)	Prob

11.6.2 Re-enter the rod length

▶ Select [LEnG] and set probe length L. Note the set unit [uni]. ▶ Press [Enter]. Note: After changing the rod length, the values for the switching limits must also be reviewed / re-entered. More information: (→ 11.2.2)	LEnG

After changing the rod length, a tank adjustment already made is deleted (→ 7.2.7)

11.6.3 Setting to another medium

▶ Select [MEdI] and set: [HIGH] = For water and water-based media. [MId] = For water-based media and media with a mean dielectric constant value. [LOW] = For oils and oil-based media. Note: Option only visible if [Prob] = [COAx]. ▶ Press [Enter]. More information: (→ 11.2.3)	MEdI

11.7 Simulation

11.7.1 Set simulation value

▶ Select [S.LvL] ▶ Set the process value to be simulated: [Numerical value] = Level in mm / inch (depending on the basic setting) [FULL] = Full state [SEnS] = Weak measured signal [Err] = Electronic fault found [EPTY] = Empty state ▶ Press [Enter].	S.LvL

11.7.2 Set simulation duration

▶ Select [S.Tim]. ▶ Set time span for simulation. Setting range: 1, 2, 3, 4, 5, 10, 15, 20, 30, 45, 60 min. Factory setting: 3 min.	S.Tim

11.7.3 Switch simulation on / off

▶ Select [S.On] and set: [OFF] = Simulation off [On] = Simulation on ▶ Press [Enter] to start the simulation.	S.On

Simulation active until [Enter] is pressed again or the time set via [S.Tim] elapses. During the simulation [SIM] is displayed every 3 s. When the simulation has ended, [S.On] is displayed.
The outputs react according to the simulated process values.

If the simulation is started via IO-Link, it can also only be finished via IO-Link. During the attempt to finish the simulation via the buttons, C.Loc is displayed.

UK

12 Operation

12.1 Operation with single probe

The single probe is made up of one individual rod. Operation with a single rod is suited for the detection of aqueous media, in particular of heavily soiled aqueous media.

For correct function with single probe, the unit needs a sufficiently large metal launching surface / launching plate. It is necessary for transferring the microwave pulse to the tank with optimum transmission power.

For installation in closed metal tanks / metal bypass pipes, the tank lid / upper pipe section serves as a launching surface. For installation in open metal tanks, tanks made of plastic or metal tanks with plastic lids a sufficiently large fixing plate, a metal plate or similar must be used (→ 7.6.3) / (→ 7.6.4).

For operation with single probe, minimum distances to tank walls and structures in the tank must be adhered to (→ 7.2).

12.2 Operation with coaxial probe

The coaxial probe is made up of an inner rod and an outer probe pipe (coaxial pipe). The rod is centred in the coaxial pipe by one or several spacers.

In case of operation with a coaxial probe media with a low dielectric constant (e.g. oil and oil-based media) are detected in addition to aqueous media.

In addition, the following applies in case of operation with coaxial probe:

- No launching plate is required.
- No minimum distances to tank walls and objects in the tank need to be observed.
- No tank adjustment is necessary.

Observe application area (→ 5.2)

12.3 Function check

After power-on the device is in the operating mode. It carries out its measurement and evaluation functions and generates output signals according to the set parameters.

▶ Check whether the unit operates correctly.

12.4 Operation indication

---- continuous	Initialisation phase after power on
≡≡≡≡	On delivery the unit is not operational. Basic settings required (→ 11.2).
[----]	Level below the active zone
Numerical value + LED 1	Current level in mm
Numerical value + LED 2	Current level in inches
Numerical value + LED 3	Current level in % of the scaled measuring range
LED 7	Switching status OUT2
LED 8	Switching status OUT1
[FULL] + numerical value alternately	Level has reached or exceeded the maximum measuring range (= overflow warning).
[Sim] + XXX alternately	Simulation active. XXX = state to be simulated (→ 11.7)
[S.On]	Simulation stopped(→ 11.7)
[Loc]	Unit locked via operating keys; parameter setting impossible. For unlocking press the two setting buttons for 10 s.
[uLoc]	Unit is unlocked / parameter setting is possible again
[C.Loc]	The unit is temporarily locked. Parameter setting via IO-Link active
[S.Loc]	Unit is permanently locked via software. This locking can only be removed via IO-Link.

12.5 Read the set parameters

- ▶ Briefly press [Enter] to open the menu.
- ▶ [▲] or [▼] scrolls through the parameters.
- ▶ Briefly press [Enter] to indicate the corresponding parameter value for about 30 s. Then the unit returns to the operating mode.

UK

12.6 Change the display unit in the operating mode

(switching between length indication (mm / inch) and percentage).

▶ Briefly press [▲] or [▼] in the operating mode.

> The selected unit is displayed for 30 s, the corresponding LED is on. With each push of the button the display type is changed.

12.7 Error indications

	Possible cause	Recommended measures
[Err]	Fault in the electronics.	Replace the unit.
[nPrb]	Rod detached from the unit; possibly incorrect setting of the rod length.	Check whether the rod is still attached to the unit. Check the parameter [LEnG].
[SEnS]	Measurement disturbed by heavy foam build-up or turbulence.	• Install the unit in a still pipe or bypass (→ 7.1). • Set / increment [dFo] (→ 11.4.11).
	Measurement disturbed by separation layers (e.g. oil layer on water).	• Remove oil by suction • Stir the medium • Check composition
	Rod or process connection soiled.	Clean the rod and the process connection.
	Installation conditions were not adhered to.	• Follow the installation instructions (→ 7) • Carry out or repeat a tank adjustment (→ 7.2.7).
	Probe length or sensitivity (setting to the medium) is incorrect.	Correct settings (→ 11.6), then carry out tank adjustment, if necessary (→ 11.2.4).
[SCx] + LED 7 [SCx] + LED 8	Flashing: short circuit in switching output OUT1 or OUT2.	Remove the short circuit.
[SC] + LED 7 + LED 8	Flashing: short circuit in both switching outputs	Remove the short circuit.
[PArA]	Faulty data set	Restore factory settings (→ 11.5).

12.8 Output response in different operating states

	OUT1	OUT2*
Initialisation	OFF	OFF
Normal operation	According to the level and [ou1] setting	According to the level 4...20 mA
Fault	OFF for [FOU1] = [OFF] ON for [FOU1] = [On]	< 3.6 mA at [FOU2] = [OFF] > 21 mA at [FOU2] = [On]
* If the analogue function [ou2] = [I] has been selected. If the switching function has been selected: see column OUT1		

UK

Additional information about the analogue output:

Full signal: With [ou2] = [I]: 20...20.5 mA
With [ou2] = [InEG]: 4...3.8 mA

Empty signal: With [ou2] = [I]: 4...3.8 mA
With [ou2] = [InEG]: 20...20.5 mA

13 Technical data

Technical data and scale drawing at www.ifm.com

13.1 Setting ranges

[LEnG]	mm	inches
Setting range	150...2000	6.0...78.8
Step increment	5	0.2

The setting ranges for the switching limits [SPx], [rPx], [FHx], [FLx] depend on the rod length (L). In general the following applies:

	mm		inches	
	min	max	min	max
[SPx] / [FHx]	15 (35)	L - 30	0.6 (1.4)	L - 1.2
[rPx] / [FLx]	10 (30)	L - 35	0.4 (1.2)	L - 1.4
Step increment	1		0.05	
Note: The values in brackets apply to the setting [MEdl] = [LOW) (→ 11.2.3)				

- [rPx] / [FLx] is always smaller than [SPx] / [FHx]. If [SPx] / [FHx] is shifted, [rPx] / [FLx] also shifts provided that the lower end of the setting range is not reached. Always set [SPx] / [FHx] first, then [rPx] / [FLx].

The setting ranges for analogue start point [ASP2] and analogue end point [AEP2] depend on the rod length (L). In general the following applies:

	mm		inches	
	min	max	min	max
[ASP2]	0	---	0	---
[AEP2]	---	L - 30	---	L - 1.2
Step increment	1		0.05	

• Minimum distance between [ASP2] and [AEP2] = 20 % of the active zone.

14 Maintenance / Transport

▶ Keep the process connection free of deposits and foreign bodies.

In case of heavy soiling:

▶ Clean process connection and rod.

In case of longer operation separation layers can form in the medium (e.g. oil on water). This applies especially to still pipes or bypasses:

▶ Remove separation layers at regular intervals.

In case of operation with coaxial probe:

▶ Ensure that the vent hole (at the upper end of the coaxial pipe) remains free.

▶ Keep the interior of the coaxial pipe free from foreign bodies and soiling.

When the medium is changed, it may also be necessary to adapt the unit settings (→ 11.2.3).

Only if data storage is required in an IO-Link application:

The tank adjustment is not saved via IO-Link. After a replacement it must be carried out again (→ 11.2.4).

More information about data storage: (→ 16.2).

▶ It is not possible to repair the unit.

▶ After use dispose of the unit in an environmentally friendly way in accordance with the applicable national regulations.

▶ In case of returns ensure that the unit is free from soiling, especially of dangerous and toxic substances.

▶ For transport only use appropriate packaging to avoid damage of the unit.

15 Factory setting

	Factory setting	User setting
tREF	nonE	
SP1	50% VMR*	
rP1	5 mm below SP1	
ASP2	0% VMR*	
AEP2	100% VMR*	
dS1	0.0	
dr1	0.0	
ou1	Hno	
ou2	I	
uni	mm	
P-n	PnP	
FOU1	OFF	
FOU2	OFF	
SELd	L	
dAP	0.0	
dFo	3.0	
Prob	nonE	
LEnG	nonE	
MEdI	nonE	
S.LVL	50 % LEnG	
S.Tim	3	
S.On	OFF	

* VMR = final value of the measuring range = LEnG value minus 30 (in millimetres).
When the LEnG value is entered, the unit calculates the basic setting.

UK

16 Notes on parameter setting via IO-Link

On delivery the unit is not operational.

During set-up, valid basic settings have to be sent to the device once even if the default settings correspond to the connected device. Make sure that the basic settings are entered correctly according to the attached rod and the medium to be detected.

16.1 Recommended procedure to avoid errors during parameter setting

▶ Enter rod length (parameter [LEnG]). Example: [LEnG] = [1000] mm.

▶ Scale analogue output (parameters [ASP2] and [AEP2]; [AEP2] must at least be 20 % greater than [ASP2]!). Example: [AEP2] = [970] mm.

  ▶ Alternatively: Set parameter [ou2] to [H..] or [F..].

▶ Select the medium (parameter [MEdI]). Example: [MEdI] = [MId].

- [HIGH] = For water and water-based media. Operating mode is optimised for suppression of deposits on the rod.
- [MId] = For water-based media and media with a mean dielectric constant value. Operating mode is optimised for media with increased foam build-up.
- [LOW] = For oils and oil-based media

▶ Transfer the sensor data to the unit.

▶ Carry out tank adjustment depending on the installation (parameter [tREF] or button "TEACH_TANK_REF").

If the adjustment distance (parameter [RefDist]) is to be adapted, this individual parameter has to be sent to the sensor first. Then the tank adjustment can be carried out. Select the adjustment distance according to, for example, the height of connection pieces or the position of structures in the tank. Within the adjustment distance, starting from the process connection, interfering reflections are compensated. Example: [RefDist] = [50] mm.

▶ Now all other settings can be carried out.

Only if data storage is required in an IO-Link application:

The tank adjustment is not saved via IO-Link. After a unit has failed it must be carried out again. Only when the tank adjustment has been carried out successfully does the unit revert to the cyclical process data transmission.

After a factory reset (button "Restore Factory Settings"), the device reboots and the factory settings are restored.

16.2 Unit locking / data storage

UK

The IO-Link master stores all parameters of the connected sensor (except tank adjustment, see above) if configured in the master (data storage). When a sensor is replaced by a sensor of the same type, the parameters of the old sensor are automatically written to the new sensor if configured in the master and if the sensor allows this.

For safety reasons the parameter download can be refused by the sensor

Factory setting: [Open]

Data storage	- [Open] = Unit allows parameter download from the master
	- [Locked] = Unit refuses parameter download from the master

More information at www.ifm.com