Department of Environmental Protection

2600 Blair Stone Road ♦ Tallahassee, Florida 32399-2400

DEP Form: 62-762.901(9)
Form Title: Storage Tank Equipment Registration Form
Effective Date: July 2019
Incorporated in Rule 62-762.851, F.A.C.

Storage Tank System Equipment Registration Form

Fill out completely

General Information

Company Name: ifm efector inc.
Contact Name: Joshua Schaus
Company Address: 1100 N Atwater Dr
City, State: Malvern, PA Zip: 19355
E-mail: josh.schaus@ifm.com
Contact Number: 610-524-2808
Product Name: PS3208 Submersible Level Transmitter
Model Number(s): PS3208
Product Type: Level Transmitter
Rule(s) citation that registration is being requested within Chapter 62-761 (UST), and/or 62-762 (AST), F.A.C.: 62-762

Write a brief description of equipment registration request including product limitations:

PS3208 Submersible Level Transmitter

Information Checklist (Choose Yes, No, or N/A - Not Applicable):

See additional Form Document for details

	Yes	No	N/A
1. Third-party Certification by a Nationally Recognized Testing Laboratory? (Required)	✔		
2. Documentation of third-party evaluation that the equipment meets DEP Rules?			✔
3. Documents included about the qualifications of the Nationally Recognized Testing Laboratory?	✔		
4. Technical information and drawings included?	✔		
5. Installation instructions included?	✔		
6. Annual Operability Testing Requirements (Rules 62-761.500, 62-762.501, & 62-762.502 F.A.C.)?			✔
7. Integrity Testing Requirements (Rules 62-761.700, 62-762.701, & 62-762.702, F.A.C.)?			✔
8. Compatible with fuel blends containing >10% ethanol or >20% biodiesel?	✔		
9. Has the product been approved or registered in other countries or states? (If so provide list)		✔	
10. Any requirements for company-certified installers or trainers?		✔	
11. Was this product(s) previously approved or registered by the Department? If yes, EQ-_____		✔	
12. Any changes or modifications to the equipment since the last submittal to DEP?			✔

Document Information: Provide supporting documents indicated as "Yes" above including this form via email to Tanknotify@floridadep.gov, or documents can be sent to FDEP, Division of Waste Management, 2600 Blair Stone Road, MS 4560, Tallahassee, FL 32399.

Write a brief description of equipment installation and performance in the U.S.:

The PS3208 is suitable for use in diesel fuel tanks to monitor the level of fuel.

Equipment Registration Certification:

To the best of my knowledge and belief, all information submitted on this form is true, accurate and complete.

Joshua Schaus, Product Manager — Printed Name and Title

Joshua Schaus — Digitally signed by Joshua Schaus Date: 2019.11.25 11:14:10 -05'00' — Signature (right click to sign)

11/25/2019 — Date

For Department Use Only:

Date Application Received: 11/25/2019 Application complete: Yes: ☑ No: ☐

EQ- 923 Date of complete or incomplete letter sent: 12/2/2019 Date Equipment Requires Renewal: 12/2/2024

Storage tank system equipment requires renewal every 5 years in accordance with subsection 62-762.851(2), F.A.C.

From: Pilz, Karl
To: Curran, Kimberley
Subject: Re: ANOTHER SENSOR RE: Florida Equipment Registration Form
Date: Monday, November 25, 2019 3:36:16 PM
Attachments: image001.png
image002.png
image003.png
image004.png
image005.png
image006.png
image008.png
image008.png
image001.png
image002.png
image006.png

Hi Kim,

See below from our Product Manager and let me know if that gets you what you need!

The only way to test the unit would be to compare it to a known value. So they unit can be removed from the installation and in air the analog output should read 4 mA (corresponding to there being no liquid on top of the sensor). This mA reading could be read by applying power and using a multi-meter or existing controller to determine the value of the analog signal.

The measurement could also be checked to a reference value, for example in a specified column of water to check the output. The final value of the measuring range of the sensor, the analog output would read 20mA. Otherwise it's a simple two wire device.

Karl Pilz
Field Sales Engineer - Raleigh
ifm efector, inc.
Direct: 919-272-1777 (Feel free to TEXT me)
Customer Service Line: 800-441-8246
Karl.Pilz@ifm.com

On Nov 25, 2019, at 1:43 PM, Curran, Kimberley <Kimberley.Curran@floridadep.gov> wrote:

> Hi Carl,
>
> I am working on your registration. Regarding questions 6 and 7 on the Form. All of our release detection and/or overfill devices that we have on

our list are required to do annual operability testing. See rules listed below. Do you have any instructions on operability testing?
UST 62-761.500(7)(d) An annual operability test shall be performed on the designated primary overfill protection device used to meet the Department's overfill protection requirement at intervals not exceeding 12 months to ensure proper operation.
AST 62-762.501(2)(e)4. An annual operability test shall be performed on the designated primary overfill protection device used to meet the Department's overfill protection requirement at intervals not exceeding 12 months to ensure proper operation.

UST 62-761.600(4) Annual operability testing of release detection systems. All release detection devices shall be tested annually at intervals not exceeding 12 months to ensure proper operation. The test must either simulate an actual alarm condition or shall be conducted according to manufacturer's specifications, and shall include, at a minimum, a determination of whether the device operates as designed. Remote testing of the system can be performed by the manufacturer if the remote test is included in the third-party certification by a Nationally Recognized Testing Laboratory.

AST 62-762.601(7) Annual operability testing of release detection systems. All release detection devices shall be tested annually at intervals not exceeding 12 months to ensure proper operation. The test must either simulate an actual alarm condition or shall be conducted according to manufacturer's specifications, and shall include, at a minimum, a determination of whether the device operates as designed. Remote testing of the system can be performed by the manufacturer if the remote test is included in the third-party certification by a Nationally Recognized Testing Laboratory.

Thanks, Kim

Kim Curran
Environmental Consultant
Florida Department of Environmental Protection
Division of Waste Management
Storage Tank Compliance
Kimberley.Curran@FloridaDEP.gov
Office: 850.245.8849
Website: Storage Tank Compliance

From: Pilz, Karl <karl.pilz@ifm.com>
Sent: Monday, November 25, 2019 11:31 AM
To: Curran, Kimberley <Kimberley.Curran@FloridaDEP.gov>

Subject: ANOTHER SENSOR RE: Florida Equipment Registration Form

Hi Kim,

We'd like to get another sensor on your EQ list. This is a submersible sensor for monitoring the level of diesel fuel in tanks.

Attached and below are all the documents for getting our PS3208 Level Sensor on your EQ list for using with diesel fuel tanks. Below are links to the details for each point on the information checklist. Let me know if you need any other info! Thanks for all your help!

1.) Unit is approved by CE. Here is information on the CE approval. It is an international approval for selling into the EU. Similar to UL for the US. Our company is based in Germany, so that is a mark that most our products need to carry.
2.) Click here for our CE documentation which lists the PS3208.
3.) CE Marking (CE-Marking), also known unofficially as "CE mark" or "EC Mark", is a mandatory mark for many (estimatively around 70%) of the products sold on the EFTA plus European Union (EU) single market (including totally 30 EEA* countries) and it is often referred as the "Trade Passport to Europe" for non-EU products.
4.) Click here for the online datasheet for the PS3208. The sensor is meant to be dropped to the bottom of a tank, and it measured the pressure of the weight of the liquid above the sensor head.
5.) Click here for the Operating instructions manual which has installation instructions.
6.) The following apply to the Storage Tank System and not the individual components. This is the responsibility of the OEM of the Storage Tank System.
- 62-761.500 - Storage Tank System Requirements
- 62-762.501 - Storage Tank System Requirements for Shop Fabricated Storage Tanks
- 62-762.502 - Storage Tank System Requirements for Field Erected Storage Tanks
7.) The following apply to the Storage Tank System and not the individual components. This is the responsibility of the OEM of the Storage Tank System.
- 62-761.500 - Storage Tank System Requirements
- 62-762.501 - Storage Tank System Requirements for Shop Fabricated Storage Tanks
- 62-762.502 - Storage Tank System Requirements for Field Erected Storage Tanks
8.) Yes
9.) No
10.) No
11.) No
12.) N/A

Karl Pilz
Sales Engineer
ifm efector inc.

Mobile: 919-272-1777
Website: www.ifm.com/us
Call for help: 800-441-8246

Purchasing: e-shop

<image003.png> <image004.png> <image005.png>

From: Curran, Kimberley <Kimberley.Curran@FloridaDEP.gov>
Sent: Monday, August 26, 2019 10:04 AM
To: Pilz, Karl <karl.pilz@ifm.com>
Subject: Florida Equipment Registration Form

Karl,

It was a pleasure to speak with you this morning. Please find the EQ Form attached. Feel free to send all your information to me or you can send it to the Tanknotify@floridadep.gov email address. I'll get it either way.

Have a great day and let me know if you have additional questions.
Kim

Kim Curran
Environmental Consultant
Storage Tank Compliance
Florida Department of Environmental Protection
Tallahassee, Florida 32399-2400
Kimberley.Curran@FloridaDEP.gov
Office: 850.245.8849
Website: Storage Tank Compliance

Installation instructions
Submersible pressure transmitter

PS3xxx
PS3xxA
PS4xxx

UK

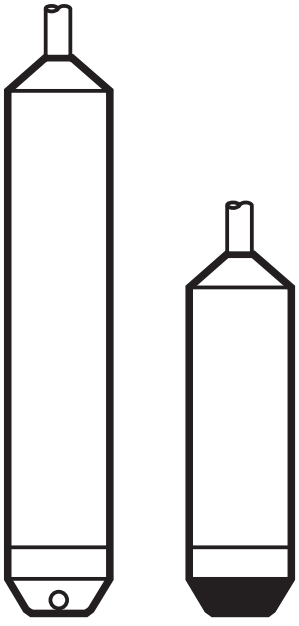

14014571.05 06/2017

Contents

1 Preliminary note 2
1.1 Symbols used 2
2 Safety instructions 2
3 Items supplied 3
4 Functions and features 4
5 Installation 4
5.1 Requirements for the mounting location (applies to PS3xxA) 5
6 Electrical connection 5
7 Maintenance, repair and disposal 5
8 Scale drawing 6
9 Technical data 6

1 Preliminary note

1.1 Symbols used

▶ Instructions

> Reaction, result

→ Cross-reference

Important note
Non-compliance may result in malfunction or interference.

Information
Supplementary note.

2 Safety instructions

- Read this document before setting up the product and keep it during the entire service life.
- Only use the product for its intended purpose (→ Functions and features).
- Only use the product for permissible media (→ Technical data).
- If the operating instructions or the technical data are not adhered to, personal injury and/or damage to property may occur.

- The manufacturer assumes no liability or warranty for any consequences caused by tampering with the product or incorrect use by the operator.
- Installation, electrical connection, set-up, operation and maintenance of the product must be carried out by qualified personnel authorised by the machine operator.
- Protect units and cables against damage.
- Avoid static and dynamic overpressure exceeding the given overload pressure (→ Technical data) by taking appropriate measures.
- The indicated bursting pressure (→ Technical data) must not be exceeded. Even if the bursting pressure is exceeded only for a short time, the unit may be destroyed. CAUTION: risk of injury!
- For submersible pressure transmitters PS3xxA: Adhere to the remarks for safe use in hazardous areas (→ ATEX operating instructions).

UK

3 Items supplied

For the measuring range and the cable length please refer to the data sheet of the corresponding submersible pressure transmitter.

The submersible pressure transmitters PS3xxA are approved for use in hazardous areas.

The following components are available as accessories (to be ordered separately):

	Order no.
Cable clamp fastener for placing the submersible pressure transmitter in the tank*	E30399
Filter element for fixing on the capillary ventilation*	E30400
Splitter box for electrical connection*	E30401
Additional weight to increase the dead weight of the unit	E30402

*CAUTION: use only outside the hazardous area.

4 Functions and features

The unit detects the hydrostatic pressure and converts it into an analogue output signal. The output signal changes in proportion with the level of the tank.

Applications

- Liquids.
- Tanks, containers, wells, streaming water, drill holes, wastewater plants.

Pressure Equipment Directive (PED):
The units comply with the Pressure Equipment Directive and are designed and manufactured for group 2 fluids in accordance with the sound engineering practice. Use of group 1 fluids on request!

5 Installation

▶ Place the unit in the tank such that it is as close as possible to the tank bottom (→ Fig. 1). For fixing with cable clamp fastener → Fig. 2.

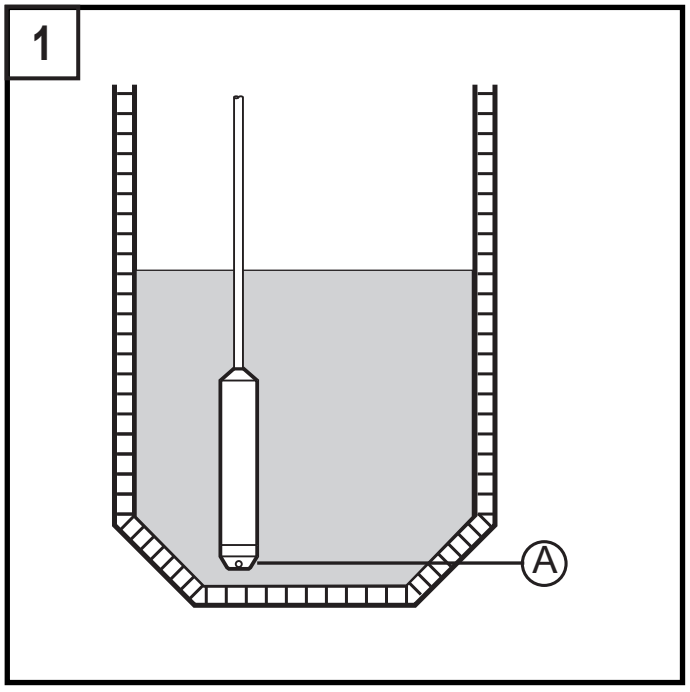

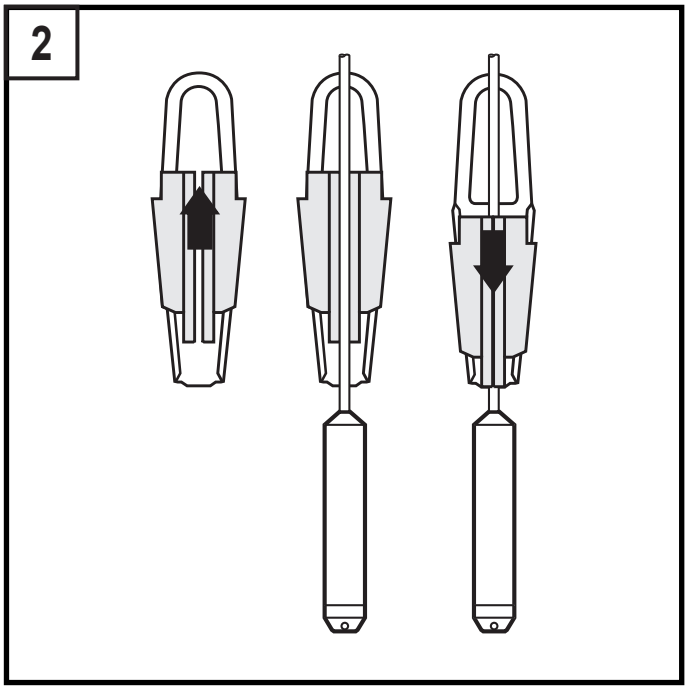

▶ For viscous media: unscrew and remove the protective cap (A).
▶ In order to prevent or reduce oscillating movements of the unit: unscrew the protective cap (A), screw the additional weight (order no. E30402) to the unit.

The unit operates on the principle of relative pressure. A capillary tube ensures pressure compensation. It is inserted through the connection cable.

▶ Make sure that the capillary tube is not blocked. If necessary, install a filter element (order no. E30400). Or use the splitter box with ventilation (order no. E30401) for the electrical connection.

In wet environments there is the risk that water penetrates into the unit through the capillary tube and causes damage to it. In this case use the filter element or the splitter box with ventilation.

The filter element and the splitter box are only allowed for use outside hazardous areas.

5.1 Requirements for the mounting location (applies to PS3xxA)

Strong electromagnetic fields in the frequency range < 2.7 GHz may lead to increased measurement errors up to 1 % of the span.Do not install the units near strong sources of electromagnetic interference (e.g. transmitters, radio equipment) or, if necessary, use a sheath current filter.

UK

6 Electrical connection

The unit must be connected by a qualified electrician.
The national and international regulations for the installation of electrical equipment must be adhered to.
Voltage supply to EN 50178, SELV, PELV.
For submersible pressure transmitters PS3xxA: For use in hazardous areas: connection to intrinsically safe supply isolators (Ex ia).

▶ Disconnect power.
▶ Connect the unit as follows:

PS3xxA / PS4xxx		PS3xxx	
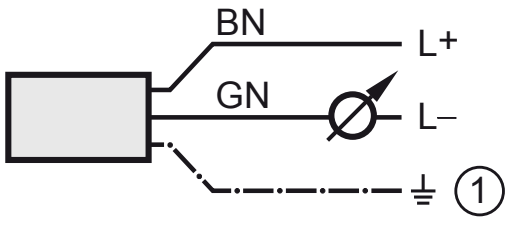		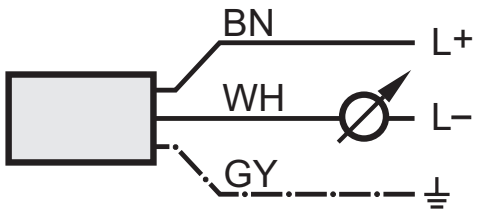	
Core colours		Core colours	
BN	brown	BN	brown
GN	green	WH	white
1: screen (connected to the housing)		GY	grey (screen)

7 Maintenance, repair and disposal

The unit has to be included in the recurrent pressure test of the tank.

Only the manufacturer is allowed to repair the unit.

After use dispose of the unit in an environmentally friendly way in accordance with the applicable national regulations.

8 Scale drawing

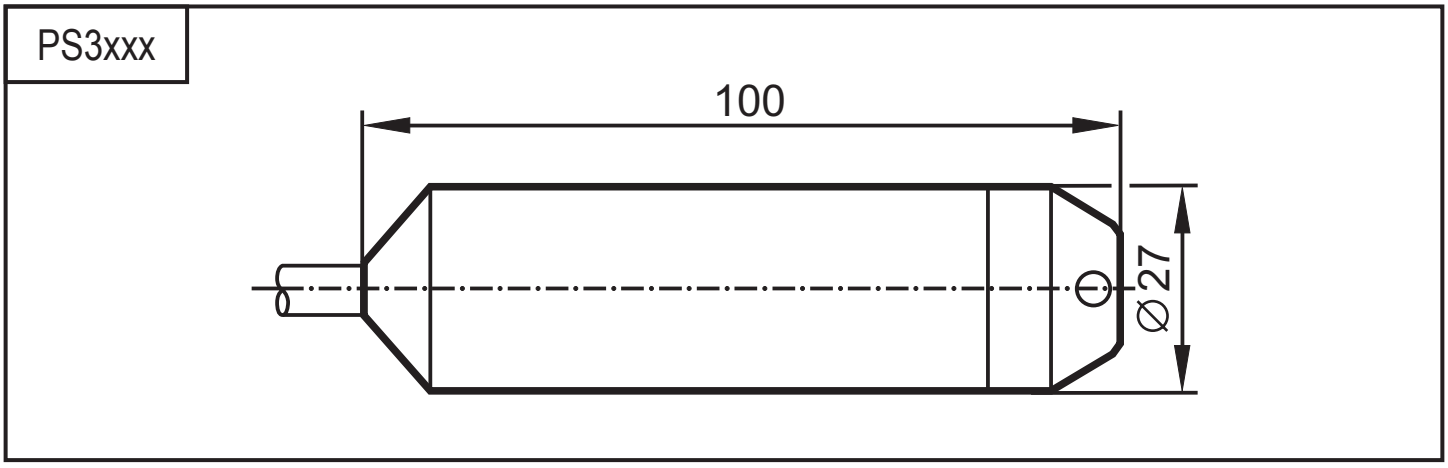

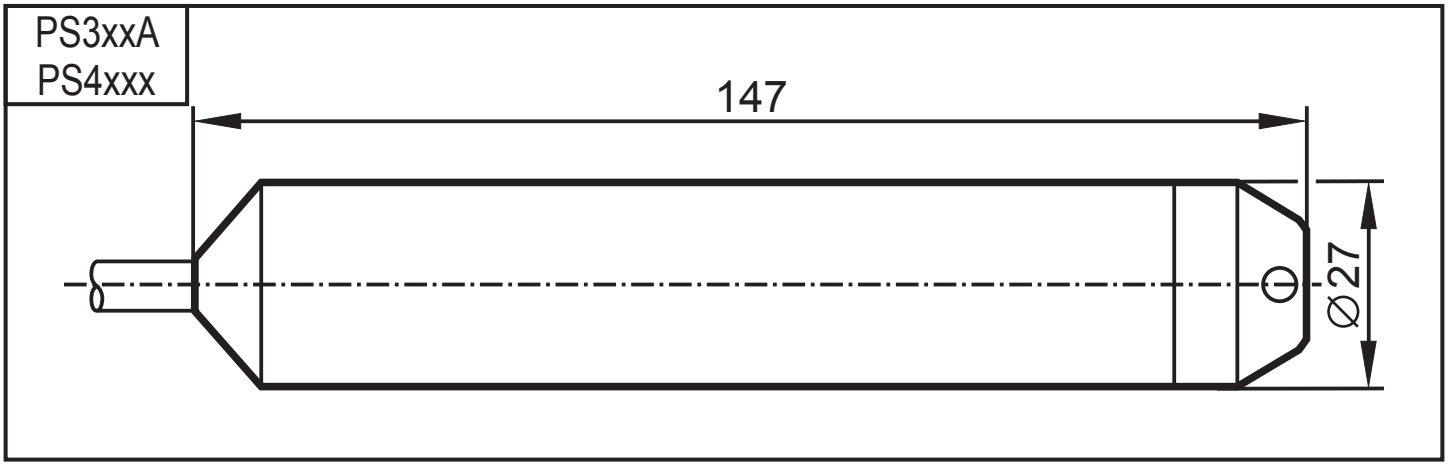

9 Technical data

For the measuring range, the permissible overload pressure and the bursting pressure please refer to the data sheet of the corresponding submersible pressure transmitter.

More information at www.ifm.com

ifm electronic

EU – Konformitätserklärung

EU declaration of conformity

Déclaration de conformité UE

ifm electronic gmbh
Friedrichstraße 1
45128 Essen
Germany

Telefon: +49 (0)201 / 24 22 - 0
Telefax: +49 (0)201 / 24 22 - 1200
Internet: www.ifm.com

Die EU-Konformitätserklärung gilt für folgende Geräte:

The EU declaration of conformity applies to the following units:

La déclaration de conformité UE s'applique aux appareils suivants:

Pegelsonden der Produktfamilie
Submersible pressure transmitters of the product family
Sondes de niveau de la famille de produits

PS3xxx

Die alleinige Verantwortung für die Ausstellung dieser Konformitätserklärung trägt der Hersteller.

This declaration of conformity is issued under the sole responsibility of the manufacturer.

La présente déclaration de conformité est établie sous la seule responsabilité du fabricant.

Wir bestätigen die Übereinstimmung mit den grundlegenden Anforderungen der europäischen Richtlinie(n):

2011/65/EU
2014/30/EU

We confirm the conformity to the essential requirements of the European directive(s):

2011/65/EU
2014/30/EU

Nous confirmons la conformité aux exigences essentielles de la (des) directive(s) européenne(s):

2011/65/UE
2014/30/UE

Folgende Norm(en) wurde(n) angewandt:

The following standard(s) was (were) applied:

La (Les) norme(s) suivante(s) a (ont) été appliquée(s):

EN 50581: 2012
EN 61326-1: 2013
EN 61326-2-3: 2013

Tettnang, 18.07.2017

(Ort und Datum der Ausstellung)
(Place and date of issue)
(Lieu et date de l'établissement)

(Unterschrift) (Name, Funktion) i.V. Hans Peter Müller /
(Signature) (name, function) Head of development
(Signature) (nom, fonction)

Dokument-Nr.: 8002563

From: Pilz, Karl
To: Curran, Kimberley
Subject: ANOTHER SENSOR RE: Florida Equipment Registration Form
Date: Monday, November 25, 2019 11:33:19 AM
Attachments: image001.png
image002.png
image003.png
image004.png
image005.png
image006.png
62-762.901(9)EquipmentRegistrationForm PS3208_JS.pdf

Hi Kim,

We'd like to get another sensor on your EQ list. This is a submersible sensor for monitoring the level of diesel fuel in tanks.

Attached and below are all the documents for getting our PS3208 Level Sensor on your EQ list for using with diesel fuel tanks. Below are links to the details for each point on the information checklist. Let me know if you need any other info! Thanks for all your help!

1.) Unit is approved by CE. Here is information on the CE approval. It is an international approval for selling into the EU. Similar to UL for the US. Our company is based in Germany, so that is a mark that most our products need to carry.
2.) Click here for our CE documentation which lists the PS3208.
3.) CE Marking (CE-Marking), also known unofficially as "CE mark" or "EC Mark", is a mandatory mark for many (estimatively around 70%) of the products sold on the EFTA plus European Union (EU) single market (including totally 30 EEA* countries) and it is often referred as the "Trade Passport to Europe" for non-EU products.
4.) Click here for the online datasheet for the PS3208. The sensor is meant to be dropped to the bottom of a tank, and it measured the pressure of the weight of the liquid above the sensor head.
5.) Click here for the Operating instructions manual which has installation instructions.
6.) The following apply to the Storage Tank System and not the individual components. This is the responsibility of the OEM of the Storage Tank System.
- 62-761.500 - Storage Tank System Requirements
- 62-762.501 - Storage Tank System Requirements for Shop Fabricated Storage Tanks
- 62-762.502 - Storage Tank System Requirements for Field Erected Storage Tanks
7.) The following apply to the Storage Tank System and not the individual components. This is the responsibility of the OEM of the Storage Tank System.
- 62-761.500 - Storage Tank System Requirements
- 62-762.501 - Storage Tank System Requirements for Shop Fabricated Storage Tanks
- 62-762.502 - Storage Tank System Requirements for Field Erected Storage Tanks
8.) Yes
9.) No
10.) No
11.) No
12.) N/A

Karl Pilz

Sales Engineer
ifm efector inc.

Mobile: 919-272-1777
Website: www.ifm.com/us
Call for help: 800-441-8246
Purchasing: e-shop

From: Curran, Kimberley <Kimberley.Curran@FloridaDEP.gov>
Sent: Monday, August 26, 2019 10:04 AM
To: Pilz, Karl <karl.pilz@ifm.com>
Subject: Florida Equipment Registration Form

Karl,

It was a pleasure to speak with you this morning. Please find the EQ Form attached. Feel free to send all your information to me or you can send it to the Tanknotify@floridadep.gov email address. I'll get it either way.

Have a great day and let me know if you have additional questions.
Kim

Kim Curran
Environmental Consultant
Storage Tank Compliance
Florida Department of Environmental Protection
Tallahassee, Florida 32399-2400
Kimberley.Curran@FloridaDEP.gov
Office: 850.245.8849
Website: Storage Tank Compliance

Enter search term (e.g. IFS215, IO-Link, pressure sensor, machine tool, etc.)

Search

Homepage » Products » Process sensors » Pressure sensors / Vacuum sensors » Submersible pressure transmitters » **PS3208**

PS3208

Hydrostatic submersible pressure transmitter
SUBMERSIBLE 0,25BAR 5M PUR CABLE

List price: $625.00
Your price: Please log in

1 Check availability

Add to cart

- Low-cost, simple level measurement
- Pressure compensation via internally vented cable
- Reduced wiring complexity when operated as two-wire current loop
- High overall accuracy and long-term stability
- Robust stainless steel housing with high ingress resistance

CE

Scale drawing Wiring 3D PDF PDF data sheet To the selector Add to favorites Compare

Technical details | Accessories | Downloads | Further information

Technical data in another language (PDF): Select language Download

Product characteristics

Output signal	analog signal	
Measuring range	0...0.25 bar	0...250 mbar

Application

Design	with capillary tube for pressure compensation

ifm efector, inc. • 1100 Atwater Drive • Malvern • PA 19355 — We reserve the right to make technical alterations without prior notice. — EN-US — PS3208-02 — 02.02.2015 —

Application	for industrial applications
Media	Liquids
Medium temperature [°C]	-10...50
Pressure rating [bar]	2
Min. bursting pressure [bar]	2.4
Type of pressure	relative pressure
Electrical data	
Operating voltage [V]	10...30 DC
Protection class	III
Reverse polarity protection	yes
Inputs / outputs	
Number of inputs and outputs	Number of analog outputs: 1
Outputs	
Total number of outputs	1
Output signal	analog signal
Number of analog outputs	1
Analog current output [mA]	4...20
Max. load [Ω]	700; (Ub = 24 V; (Ub - 10 V) / 20 mA)
Short-circuit protection	yes
Measuring/setting range	
Measuring range	0...0.25 bar 0...250 mbar

ifm efector, inc. • 1100 Atwater Drive • Malvern • PA 19355 — We reserve the right to make technical alterations without prior notice. — EN-US — PS3208-02 — 02.02.2015 —

Accuracy / deviations

Repeatability [% of the span]	< 0,1; (with temperature fluctuations < 10 K)
Characteristics deviation [% of the span]	< 0,5 (BFSL) / 1; (incl. linearity, zero and span error (limit value setting))
Linearity deviation [% of the span]	< 0,2 (BFSL)
Long-term stability [% of the span]	< 0,2; (per year)
Temperature coefficient zero point [% of the span / 10 K]	< ± 0,2; (0...50 °C)
Temperature coefficient span [% of the span / 10 K]	< ± 0,2; (0...50 °C)

Operating conditions

Ambient temperature [°C]	-10...50
Storage temperature [°C]	-30...80
Protection	IP 68

Tests / approvals

MTTF [years]	403
Pressure equipment directive	sound engineering practice; can be used for group 2 fluids; group 1 fluids on request

Mechanical data

Weight [g]	548
Material	stainless steel (1.4571/316Ti); PA

Remarks

Pack quantity	1 pcs.

ifm efector, inc. • 1100 Atwater Drive • Malvern • PA 19355 — We reserve the right to make technical alterations without prior notice. — EN-US — PS3208-02 — 02.02.2015 —

Electrical connection

Connection	Cable: 5 m, PUR, Ø 7.5 mm; Core insulation:, PVC

ifm efector, inc. • 1100 Atwater Drive • Malvern • PA 19355 — We reserve the right to make technical alterations without prior notice. — EN-US — PS3208-02 — 02.02.2015 —

ifm efector, inc.
1100 Atwater Dr.
Malvern, PA 19355

Phone 800-441-8246
email cs.us@ifm.com

© ifm electronic gmbh 2019