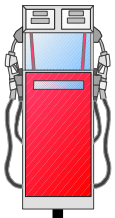

United States Environmental Protection Agency

Standard Test Procedures for Evaluating Leak Detection Methods: Liquid-phase Out-of-Tank Product Detectors

EPA/530/UST-90/009 March 1990

PREPARED FOR:

The KWA CD-ROM

(Version 1.0)

KWA

Ken Wilcox Associates, Inc.
1125 Valley Ridge Drive, Grain Valley, MO 64029, USA
Voice (816) 443-2494, Fax (816) 443-2495
E-mail info@kwaleak.com, Web http://www.kwaleak.com

United States
Environmental Protection
Agency

Solid Waste And
Emergency Response/
Research and Development

EPA/530/UST-90/009
March 1990

EPA

Standard Test Procedures for Evaluating Leak Detection Methods: Liquid-Phase Out-of-Tank Product Detectors

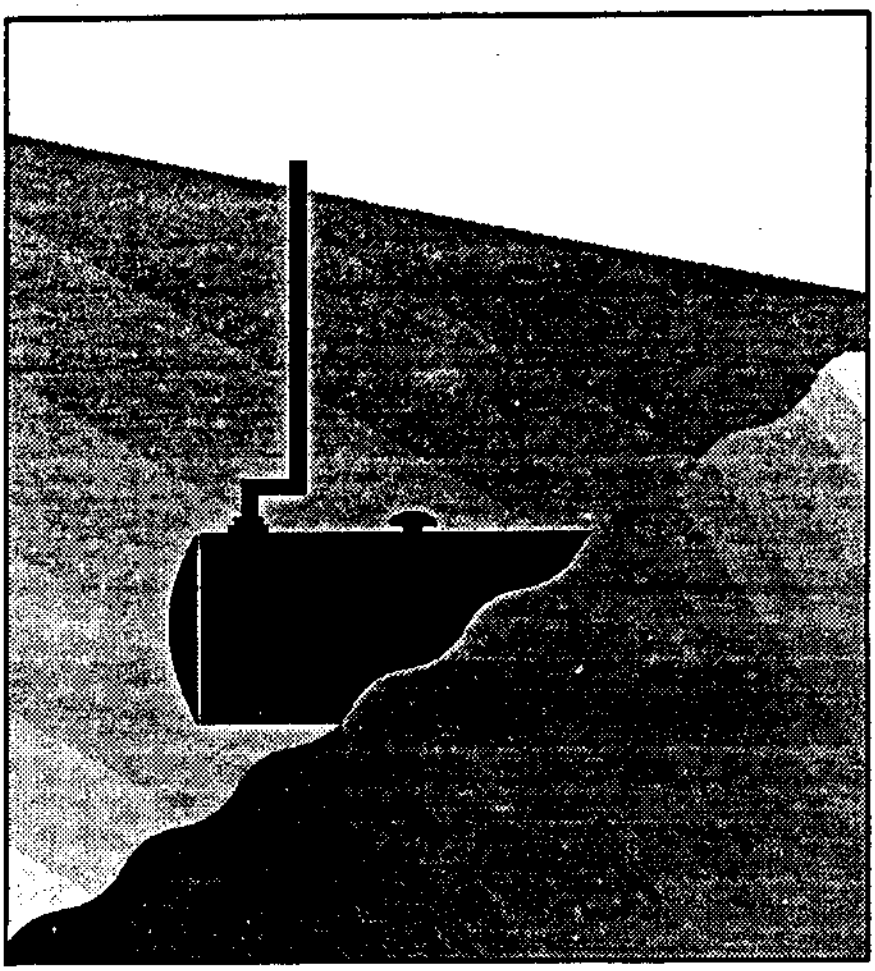

Standard Test Procedures for Evaluating Leak Detection Methods: Liquid-Phase Out-of-Tank Product Detectors

Final Report

U.S. Environmental Protection Agency
Office of Research and Development

March 1990

This report has been funded wholly or in part by the Environmental Protection Agency under Contract No. 68-03-3409 to Radian Corporation. It has been subject to the Agency's review, and it has been approved for publication as an EPA document. Mention of trade names or commercial products does not constitute endorsement or recommendation for use.

FOREWORD

HOW TO DEMONSTRATE THAT LEAK DETECTION METHODS MEET EPA'S PERFORMANCE STANDARDS

The Environmental Protection Agency's (EPA's) regulations for underground storage tanks require owners and operators to check for leaks on a routine basis using one of a number of detection methods (40 CFR Part 280, Subpart D). In order to ensure the effectiveness of these methods, EPA set minimum performance standards for equipment used to comply with the regulations. For example, after December 22, 1990, all tank tightness testing methods must be capable of detecting a 0.10 gallon per hour leak rate with a probability of detection of at least 95% and a probability of false alarm of no more than 5%. It is up to tank owners and operators to select a method of leak detection that has been shown to meet the relevant performance standard.

Deciding whether a method meets the standards has not been easy, however. Until recently, manufacturers of leak detection methods have tested their equipment using a wide variety of approaches, some more rigorous than others. Tank owners and operators have been generally unable to sort through the conflicting sales claims that are made based on the results of these evaluations. To help protect consumers, some state agencies have developed mechanisms for approving leak detection methods. These approval procedures vary from state to state, making it their method nationwide. The purpose of this policy is to describe the ways that owners and operators can check that the leak detection equipment or service they purchase meets the federal regulatory requirements. States may have additional requirements for approving the use of leak detection methods.

EPA will not test, certify, or approve specific brands of commercial leak detection equipment. The large number of commercially available leak detection methods makes it impossible for the Agency to test all the equipment or to review all the performance claims. Instead, the Agency is describing how equipment should be tested to prove that it meets the standards. Conducting this testing is left up to equipment manufacturers in conjunction with third-party testing organizations. The manufacturers will then provide a

copy of the report showing that the method meets EPA's performance standards. This information should be provided to customers or regulators as requested. Tank owners and operators should keep the evaluation results on file to satisfy EPA's record keeping requirements.

EPA recognizes three distinct ways to prove that a particular brand of leak detection equipment meets the federal performance standards:

1. Evaluate the method using EPA's standard test procedures for leak detection equipment;

2. Evaluate the method using a national voluntary consensus code or standard developed by an nationally recognized association or independent third-party testing laboratory; or,

3. Evaluate the method using a procedure deemed equivalent to an EPA procedure by a nationally recognized association or independent third-party testing laboratory.

The manufacturer of the leak detection method should prove that the method meets the regulatory performance standards using one of these three approaches. For regulatory enforcement purposes, each of the approaches is equally satisfactory. The following sections describe the ways to prove performance in more detail.

EPA Standard Test Procedures

EPA has developed a series of standard test procedures that cover most of the methods commonly used for underground storage tank leak detection. These include:

1. "Standard Test Procedures for Evaluating Leak Detection Methods: Volumetric Tank Tightness Testing Methods"

2. "Standard Test Procedures for Evaluating Leak Detection Methods: Nonvolumetric Tank Tightness Testing Methods"

National Consensus Code or Standard

A second way for a manufacturer to prove the performance of leak detection equipment is to evaluate the system following a national voluntary consensus code or standard developed by a nationally recognized association (e.g., ASTM, ASME, ANSI, etc.). Throughout the technical regulations for underground storage tanks, EPA has relied on national voluntary consensus codes to help tank owners decide which brands of equipment are acceptable. Although no such code presently exists for evaluating leak detection equipment, one is under consideration by the ASTM D-34 subcommittee. The Agency will accept the results of evaluations conducted following this or similar codes as soon as they have been adopted. Guidelines for developing these standards may be found in the U.S. Department of Commerce "Procedures for the Development of Voluntary Product Standards" (FR, Vol. 51, No. 118, June 20, 1986) and OMB Circular No. A-119.

Alternative Test Procedures Deemed Equivalent to EPA's

In some cases, a specific leak detection method may not be adequately covered by EPA standard test procedures or a national voluntary consensus code, or the manufacturer may have access to data that makes it easier to evaluate the system another way. Manufacturers who wish to have their equipment tested according to a different plan (or who have already done so) must have that plan developed or reviewed by a nationally recognized association or independent third-party testing laboratory (e.g. Factory Mutual, National Sanitation Foundation, Underwriters Laboratory, etc.). The results should include an accreditation by the association or laboratory that the conditions under which the test was conducted were at least as rigorous as the EPA standard test procedure. In general this will require the following:

1. The evaluation tests the system both under the no-leak condition and an induced-leak condition with an induced leak rate as close as possible to (or smaller than) the performance standard. In the case of tank testing, for example, this will mean testing under both 0.0 gallon per hour and 0.10 gallon per hour leak rates. In the case of

3. "Standard Test Procedures for Evaluating Leak Detection Methods: Automatic Tank Gauging Systems"

4. "Standard Test Procedures for Evaluating Leak Detection Methods" Statistical Inventory Reconciliation Methods"

5. "Standard Test Procedures for Evaluating Leak Detection Methods: Vapor-Phase Out-of-Tank Product Detectors"

6. "Standard Test Procedures for Evaluating Leak Detection Methods: Liquid-Phase Out-of-Tank Product Detectors"

7. "Standard Test Procedures for Evaluating Leak Detection Methods: Pipeline Leak Detection Systems"

Each test procedure provides an explanation of how to conduct the test, how to perform the required calculations, and how to report the results. The results from each standard test procedure provide the information needed by tank owners and operators to determine if the method meets the regulatory requirements.

The EPA standard test procedures may be conducted directly by equipment manufacturers or may be conducted by an independent third party under contract to the manufacturer. However, both state agencies and tank owners typically prefer that the evaluation be carried out by an independent third-party in order to prove compliance with the regulations. Independent third-parties may include consulting firms, test laboratories, not-for-profit research organizations, or educational institutions with no organizational conflict of interest. In general, EPA believes that evaluations are more likely to be fair and objective the greater the independence of the evaluating organization.

National Consensus Code or Standard

A second way for a manufacturer to prove the performance of leak detection equipment is to evaluate the system following a national voluntary consensus code or standard developed by a nationally recognized association (e.g., ASTM, ASME, ANSI, etc.). Throughout the technical regulations for underground storage tanks, EPA has relied on national voluntary consensus codes to help tank owners decide which brands of equipment are acceptable. Although no such code presently exists for evaluating leak detection equipment, one is under consideration by the ASTM D-34 subcommittee. The Agency will accept the results of evaluations conducted following this or similar codes as soon as they have been adopted. Guidelines for developing these standards may be found in the U.S. Department of Commerce "Procedures for the Development of Voluntary Product Standards" (FR, Vol. 51, No. 118, June 20, 1986) and OMB Circular No. A-119.

Alternative Test Procedures Deemed Equivalent to EPA's

In some cases, a specific leak detection method may not be adequately covered by EPA standard test procedures or a national voluntary consensus code, or the manufacturer may have access to data that makes it easier to evaluate the system another way. Manufacturers who wish to have their equipment tested according to a different plan (or who have already done so) must have that plan developed or reviewed by a nationally recognized association or independent third-party testing laboratory (e.g. Factory Mutual, National Sanitation Foundation, Underwriters Laboratory, etc.). The results should include an accreditation by the association or laboratory that the conditions under which the test was conducted were at least as rigorous as the EPA standard test procedure. In general this will require the following:

1. The evaluation tests the system both under the no-leak condition and an induced-leak condition with an induced leak rate as close as possible to (or smaller than) the performance standard. In the case of tank testing, for example, this will mean testing under both 0.0 gallon per hour and 0.10 gallon per hour leak rates. In the case of

ground-water monitoring, this will mean testing with 0.0 and 0.125 inch of free product.

2. The evaluation should test the system under at least as many different environmental conditions as the corresponding EPA test procedure.

3. The conditions under which the system is evaluated should be at least as rigorous as the conditions specified in the corresponding EPA test procedure. For example, in the case of volumetric tank tightness testing, the test should include a temperature difference between the delivered product and that already present in the tank, as well as the deformation caused by filling the tank prior to testing.

4. The evaluation results must contain the same information and should be reported following the same general format as the EPA standard results sheet.

5. The evaluation of the leak detection method must include physical testing of a full-sized version of the leak detection equipment, and a full disclosure must be made of the experimental conditions under which (1) the evaluation was performed, and (2) the method was recommended for use. An evaluation based solely on theory or calculation is not sufficient.

ACKNOWLEDGMENTS

This document was written by Ronald D. Achord for the U.S. Environmental Protection Agency's Office of Research and Development (EPA/ORD) under Contract No. 68-03-3409. The Program Manager was Dorothy A. Stewart, the Project Director was A. Gwen Eklund, and Julia M. Nault was the Work Assignment Manager. Philip B. Durgin, PhD was the EPA/ORD Project Officer.

CONTENTS

Foreword..... iii

Acknowledgments..... viii

X 0000 Standard Test Method for ACCURACY AND RESPONSE TIME FOR LIQUID-PHASE OUT-OF-TANK PETROLEUM DETECTORS

X 0002 Standard Test Method for SPECIFICITY FOR LIQUID-PHASE OUT-OF-TANK PETROLEUM DETECTORS

X 0005 Standard Test Method for LOWER DETECTION LIMIT FOR LIQUID-PHASE OUT-OF-TANK PETROLEUM DETECTORS

X 0004 Standard Practice for PREPARATION OF SYNTHETIC GASOLINE FOR TESTING OUT-OF-TANK PETROLEUM DETECTORS

Designation: X 0000

Standard Test Method for

ACCURACY AND RESPONSE TIME FOR LIQUID-PHASE OUT-OF-TANK PETROLEUM DETECTORS

1. Scope

1.1 This test method covers determination of accuracy and response time of liquid-phase out-of-tank petroleum hydrocarbon leak detectors that utilize ground water monitoring wells.

1.2 This method is applicable to only the components associated with detection of liquid-phase petroleum releases for detection systems utilizing multiple operating principles.

1.3 *This standard may involve hazardous materials, operations, and equipment. This standard does not purport to address all of the safety problems associated with its use. It is the responsibility of the user of this standard to establish appropriate safety and health practices and determine the applicability of regulatory limitations prior to use.*

2. Referenced Documents

2.1 *ASTM Standards*:

D 1125 Standard Test Methods for Electrical Conductivity and Resistivity of Water

E 1 Standard Specification for ASTM Thermometers

E 456 Standard Terminology Relating to Statistics

2.2 EPA Leak Detector Standards:

X 0004 Standard Practice for Preparation of Synthetic Gasoline for Testing Out-of-Tank Petroleum Detectors

3. Terminology

3.1 *Definitions* -- For formal definitions of statistical terms, see Terminology E 456.

3.2. Descriptions of Terms Specific to This Method

3.2.1 *activated*--refers to the state of a qualitative detector's response when indicating the presence of hydrocarbons.

3.2.2 *detection time*--elapsed time from a detector's first contact with test product to an output that is within 95% of full scale or activated.

3.2.3 *fall time*--elapsed time after the detector is removed from test hydrocarbon liquid until its output returns to within 5% of its original baseline level or there is no detectable signal output.

3.2.4 *non-activated*--refers to the state of a qualitative detector's response when indicating that no hydrocarbons are detected.

3.2.5 *probe*--component of a detection system that must come into contact with petroleum product before the product can be detected.

3.2.6 *qualitative responses*--type of detector response that indicates only the presence or absence of hydrocarbons without determining the specific hydrocarbon thickness.

3.2.7 *quantitative responses*--type of detector response that quantitates the concentration of the hydrocarbon present.

3.2.8 *relative accuracy*--absolute mean difference between a group of measured values and the true value, plus the 2.5% error confidence coefficient, divided by the true value. Relative accuracy is a measure of the maximum expected bias (without regard to sign) for a series of measurements.

3.2.9 *response*--detector's indication of the presence of petroleum hydrocarbons. Responses can be qualitative or quantitative.

3.2.10 *response time*--general term that refers to the more specific terms of detection time and fall time.

3.2.11 *test product*--commercial or synthetic gasoline used to characterize detector performance.

4. Summary of Test Method

4.1 Detector probes are supported in a container that has a layer of liquid hydrocarbon test product on water. Detectors are tested five times at each test product thickness. Test product thicknesses are 0.040 cm, 0.32 cm, and 0.64 cm. Detector response is monitored for up to 24 hours. The performance of detectors is tested with commercial unleaded gasoline and synthetic gasoline made according to Method X 0004 with compounds that are representative of components of gasoline.

5. Significance and Use

5.1 For liquid-phase petroleum hydrocarbon detectors, accuracy is a measure of how well the detector's output compares to a known thickness of hydrocarbon product on water. Accuracy measurements provide a means for estimating the reliability of a detector.

5.2 Precision is the degree of agreement of repeated measurements of the same parameter. Precision estimates reflect random error and are not affected by bias. In this method, precision is expressed in terms of the percent coefficient of variation.

5.3 In addition to these primary performance characteristics, procedures for estimating the magnitude and direction of measurement bias are presented. Bias is the systematic error inherent in a method, which may be positive or negative. In this method, bias is expressed as the signed percent difference between the average measured value for a series of tests and the true value.

5.4 Response time is the general term that refers to a combination of the more specific terms detection time and fall time. Detection time is the elapsed time from a detector's first contact with a given thickness of petroleum product until it reaches 95% of its full-scale signal output or to an activated response. Fall time is the elapsed time after the detector is removed from contact with petroleum hydrocarbon until the detector output returns to a stable baseline response.

5.5 Results obtained using this method will permit the most advantageous use of a detector. Weaknesses as well as strengths of the instrument should become apparent. It is not the interest of this method to compare similar detectors from different manufacturers, but to enable the user to choose a suitable detector.

6. Interferences

6.1 Conditions that can cause interferences with this method include temperature changes, high temperatures, test product evaporation, vibrations, and test products containing water-miscible substances (e.g., alcohol). To avoid these conditions, tests should be conducted at constant (±3°C), normal laboratory temperatures on a stable base. Evaporation can be reduced by covering the test apparatus and maintaining a seal around the detector probe and test container openings.

6.2 It is difficult to verify the thickness of thin layers of liquid hydrocarbon product on water. For this reason, product thicknesses are determined by calculation. For these calculations to be accurate, variations in the dimensions of the test container should be minimal. Use containers that have straight vertical sides with no visible protuberances or indentations.

7. Apparatus

7.1 *Test Container*--All tests should be performed in non-reactive containers with constant proportions. The containers hold water and test product during testing. An example test container is depicted in Figure 1.

7.1.1 The test container should be cylindrical so that the thickness of test product added to the container can be accurately calculated. The container walls should be perpendicular to its bottom with no visible protuberances or indentations throughout their height. The container diameter should not deviate by more than 0.1 mm (0.004 in.) throughout the region where hydrocarbon liquid will be contained during testing. The bottom of the container can be rounded as long as the rounded portion does not extend above the water level during tests. Also, the container walls should not deflect visibly when filled with liquid. A typical container can be constructed by welding a 6-inch outside diameter, Type 304L, seamless, stainless steel pipe section to a square plate of the same material, as depicted in Figure 1. The pipe and base plate sections should be at least 1/4-inch thick to minimize warping during welding.

7.1.2 Container dimensions are dependent on detector probe dimensions and operation. Containers with an inside diameter of 5-1/2 inches and a height between 12 to 18 inches should be adequate for most detectors.

7.1.3 The container and its base should be machined to accommodate a thermocouple, a grounding wire, and a cover-grounding cable. Thermocouple fittings can be accommodated in a 3/8-inch, NPT-threaded hole. The hole should be located so that the thermocouple does not interfere with operation of the detector probe. A grounding wire and cover-grounding cable can be accommodated by fitting the container base with two #10 screw holes.

7.2 *Container Cover*--A cover that fits snugly over the container and supports the detector probe should be used. The cover should prevent vapor loss from the container.

7.2.1 An appropriate cover can be made by machining a 1/4-inch thick by 8-inch square, stainless steel plate. A 1/8-inch-deep groove should be cut into one side of the plate. The width and diameter of the groove should allow the plate to fit snugly onto the test container. The plate should have a hole to accommodate the detector probe. The diameter of the probe hole is dependent on the dimensions of the probe.

7.2.2 Connect the cover to the container with a braided steel cable. The cable grounds the cover to the container. Remove any plastic or rubber insulation at the ends of the braided steel cable before fastening. A hole for a #10 screw should be drilled and tapped into the cover to fasten the cable.

7.3 *Timer*--A timer that is accurate and precise to at least one second per 10 minutes is required. Alternatively, a chart recorder or other data acquisition system can be used. If a chart recorder or other data acquisition system is to be used, the timer is not required. If used, the recorder or data acquisition system timing must be accurate and precise to at least one second per 10 minutes.

7.4 *Electronic Recorder*--A chart recorder or other electronic data acquisition system may be used if it is compatible with the specific detector being evaluated. The output of the data recorder should be accurate and precise to ±2% over the range of output from a quantitative-output detector. A data recorder used with a qualitative-output detector must unambiguously identify activated and inactivated states.

7.5 *Thermocouple*--A thermocouple and temperature readout, or equivalent, that responds from 0°C to 40°C and is accurate and precise to within 1°C over this range is needed.

7.6 *Thermometer*--ASTM Solvents Distillation Thermometer having a range from -2°C to 52°C and conforming to the requirements for Thermometer 37C as prescribed in Specification E 1.

7.7 *String*--Approximately 30 cm of cotton or nylon string with a diameter no greater than 0.2 cm may be needed to measure the cross-sectional area of the detector. Alternatively, calipers with 0.1-mm or finer gradations may be used.

7.8 *Calipers*--0.1 mm or finer gradations capable of measuring inside diameter of test container.

8. Reagents and Materials

8.1 *Purity of Reagents*--Reagent grade chemicals shall be used in all tests, except that commercial gasoline may be purchased from an ordinary retail outlet. Unless otherwise indicated, it is intended that all reagents conform to the specifications of the Committee on Analytical Reagents for the American Chemical Society where such specifications are available.[1] Other

---

[1]"Reagent Chemicals, American Chemical Society Specifications," Am. Chemical Soc., Washington, D.C. For suggestions on the testing of reagents not listed by the American Chemicals Society, see "Reagent Chemicals and Standards," by Joseph Rosin, D. Van Nostrand Co., In., New York, NY, and the "United States Pharmacopeia."

grades may be used, provided it is first ascertained that the reagent is of sufficiently high purity to permit its use without lessening the accuracy of determination.

8.2 *Purity of Water*--Unless otherwise indicated, references to water shall be understood to mean drinking water or other relatively pure water with an electrical conductivity (Method D 1125) of at least 50 µmhos/cm.

8.3 *Commercial Gasoline*--Commercial gasoline test product shall be unleaded regular or premium gasoline that is purchased at a retail outlet. The gasoline shall contain less than 2% water-miscible substances. *(Danger--Gasoline is extremely flammable. Vapors are harmful if inhaled. See Annex A1.1. Leaded gasoline should not be used because there are significant additional hazards associated with its handling and disposal).*

8.4 *Synthetic Gasoline*--Synthetic gasoline, as used in this method, is a 12-component mixture that is roughly representative of automotive gasoline prepared according to Method X 0004. *(Danger--Synthetic gasoline is extremely flammable. Vapors are harmful if inhaled. See Annex A1.2).*

8.5 *Other Test Products*--This test method can also be used with other non-viscous, water-immiscible liquids. The method, however, does not directly address use of liquids other than commercial gasoline and the synthetic gasoline described herein. The suitability of this method with regard to other substances should be ascertained before this method is used with those liquids.

9. Calibration and Standardization

9.1 *Chart Recorder or Other Data Recording System*--If used, a chart recorder or other data recording system should be calibrated along with the detector. The data recording system should be calibrated according to

instructions from its manufacturer and the detector manufacturer. Also, any recording device should be compatible with the detector being investigated. Consult specifications from the manufacturers of the recording device and the detector.

9.2 *Detector*--Because of wide design variability among different petroleum detectors, it is impossible to give complete calibration instructions for all possible detector designs. Calibrate all detectors according to manufacturer instructions.

9.3 *Probe Cross-Sectional Area*--Estimate the area of the cross-section of the probe that will be parallel to and at the same level as test product.

9.3.1 The area of cylindrical or similarly shaped, many-sided polygonal probe cross-sections should be measured by wrapping a thin string around the detector cross-section that is parallel to and at the level of test product. Fit one loop of string tightly around the detector, and cut or mark the string where it begins to overlap itself. The length of one loop of string around the detector is the perimeter. Derive the detector radius from the following equation:

$$\text{Radius, cm} = p/(2 \times 3.1416) \qquad (1)$$

where:

p = length of perimeter, cm.

The following formula should be used to calculate the area of a round cross-section:

$$\text{Cross-sectional area, cm}^2 = 3.1416 \times r^2 \qquad (2)$$

where:

r = radius of the cross-section, cm.

9.3.2 Alternatively, the probe diameter can be measured with calipers. The radius, which is half the diameter, can then be used to calculate the cross-sectional area by Equation 2.

9.3.3 Determine the area of rectangular cross-sections by measuring the length and width of the detector cross-section that is parallel to and at the level of test product. Calculate the cross-sectional area using the following equation:

$$\text{Cross-sectional area, cm}^2 = l \times w \qquad (3)$$

where:

l = length, cm; and

w = width, cm.

9.3.4 For detectors that have more than one part that will displace test product, calculate the cross-sectional area for each part. The total area for the probe is the sum of cross-sectional areas for individual parts.

9.3.5 For irregularly shaped probes, determine the cross-sectional area by immersing the probe in water. Make two marks part-way up one side of a transparent container that will contain the detector probe. The marks should be 1.27 cm apart, and the container should have vertical walls in the region where the marks are made. Add water to the lower mark. Using a buret, determine the volume of water required to reach the upper mark to the nearest 0.1 mL. Empty the container, and suspend the detector probe inside the container. The region of the probe that will contact test product should be centered between the container marks. Again, fill the container to the lower mark with water and determine the volume of water to reach the upper mark. Calculate the probe cross-sectional area using the following equation:

$$\text{Probe area, cm}^2 = (V_i - V_p)/1.27 \qquad (4)$$

where:

V_i = Volume between marks without probe, mL;

V_p = Volume between marks with probe, mL; and

1.27 = height of column of water displaced, cm.

9.4 *Thermocouple*—Perform side-by-side multipoint calibrations for each thermocouple used in the test procedure in a 1-L glass beaker filled with water. The reference thermometer should be an ASTM Solvents Distillation Thermometer having a range from -2°C to 52°C and conforming to the requirements for Thermometer 37C as prescribed in Specification E 1. The levels tested are low (room temperature - 10°C), room temperature, and high (room temperature + 10°C).

9.4.1 Insert both the thermocouple and reference thermometer into the beaker of water and add small quantities of ice. Allow the ice to melt and the temperature to stabilize. Continue adding ice until a steady-state reading (±0.5°C over two minutes) of room temperature - 10°C (±2°C) occurs.

9.4.2 Repeat this procedure using room temperature water (15°C to 30°C), and room temperature + 10°C (±2°C) water. If the temperature difference is more than 1°C, either repeat the test with the same thermocouple or replace the thermocouple and repeat the test until it is acceptable.

9.4.3 Perform thermocouple calibration at the onset of testing and at least once a year.

9.5 *Test Container Area*—Accurately measure the inside diameter of the test container to 0.1 mm or finer. Calculate the container cross-sectional area with the following formula:

$$\text{Area, cm}^2 = 0.785 \times d_c^2 \qquad (5)$$

where:

d_c = test container inside diameter, cm.

10. Procedure

10.1 *Test Series*--The detector should be tested a minimum of five times for each combination of test product and hydrocarbon layer thickness listed in Table 1.

Note 1--Do not reuse product-soluble components that have been exposed to product. Instead, replace these components.

10.1.1 Perform tests in a random order such that variables of test product and hydrocarbon layer thickness are isolated.

10.2 Add an appropriate volume of water to the container. The volume of water added must allow the detector probe to be fully functional. If the probe operational characteristics do not place limitations on the water volume, then add 2 L of water to the container. The water should be within 2°C of room temperature, which should be between 15°C and 28°C.

10.3 Place the cover on the container and connect the steel braided cable between the cover and the container.

10.4 Mount the probe in the test container so that it is fully functional and forms a tight seal with the cover. The manufacturer's specifications should give details on the placement of the detector in a well with regard to the bottom of the well and in relation to the depth of water in the well. Place the detector in the test container as if the test container were a well.

10.5 Electrically connect the test container to an earth ground to dissipate static electricity.

10.6 Connect the detector output to a chart recorder or other data acquisition system if one is being used. All connections should be in compliance with specifications from the manufacturers of the detector and the data recording system.

10.7 Calibrate the detector if necessary. Many detectors, such as product-soluble detectors, do not require any calibration. Perform calibrations, if necessary, according to manufacturer recommendations. Calibration may need to occur before mounting in the test container. If a data recording system is being used, it should be calibrated with the detector. Calibrate the data acquisition system according to manufacturer instructions.

10.8 *Blank Test*—Perform a blank test by monitoring the detector output for 30 minutes while the probe is in water.

10.8.1 For quantitative detectors, record the stable output level from the detector at the end of the 30-minute period. If the detector output is not stable after 30 minutes, wait until the output becomes stable. Record the stable output level.

10.8.2 If a qualitative detector goes to an activated state during the blank test, correct the detector malfunction or replace it with a properly operating detector.

10.9 Determine the amount of product to add to the water. It is important to accurately calculate the amount of product that is needed to form a product layer. Calculate the volume of product to add to the test container with the following equation:

$$\text{Volume, mL} = t \times (a_c - a_d) \qquad (6)$$

where:

t = desired product thickness in cm;

a_c = test container cross-sectional area in cm^2; and

a_d = estimated detector cross-sectional area in cm^2.

10.10 Remove the container cover with the attached detector probe from the container, and add the appropriate volume of test product with a glass buret. Pour the test product without splashing or contacting the container walls.

10.11 Cover the top of the test container immediately to reduce test product evaporation and to reduce ambient vibrations from air currents.

10.12 *Data Recording*--Begin monitoring the detector response immediately after replacing the probe and cover. Do not stir or otherwise disturb the contents of the test container. The detector output may be recorded by hand, with a chart recorder, or with another type of electronic data acquisition system. The nature of response monitoring is dependent on whether the device signal is quantitative or qualitative.

10.12.1 For quantitative detectors, monitor the output signal at least until the signal becomes stable or 24 hours elapses, whichever is shorter. Record the detector output at the end of the test period.

10.12.2 For qualitative detectors, monitor the detector output at least until it activates or 24 hours elapse, whichever is shorter. Record the detector output state (activated or not activated) at the end of the test period.

10.13 *Detection Time*--If the detector gives a positive response within 24 hours, the elapsed time between when the probe was placed in the container and when the detector responded is the detection time. The nature of a response is dependent on whether a detector gives quantitative or qualitative output.

10.13.1 The period for detection time of quantitative detectors is *from introduction of the detector probe into the test product to the time the*

detector reaches 95% of its final stable output. Calculate the 95% of final stable output level from the following equation:

$$\text{High level output, cm} = BL + (HL - BL) \times 0.95 \qquad (7)$$

where:

BL = stable baseline output, cm; and

HL = stable high level output,cm.

10.13.2 A positive response for qualitative detectors occurs when the detector output goes from an inactivated state to an activated state.

10.13.3 If the detector gives a response within 24 hours, report the elapsed time between when the detector probe was added to the container with test product and when the detector responded as the detection time.

10.13.4 Detectors with lower detection limits above a particular test product thickness do not need to be tested for the full 24-hour period. They should be tested for at least five times their maximum expected detection time.

10.14 Record water and product temperature in the test container in degrees Centigrade. If the change in temperature since the first temperature measurement is more than 8°C, repeat the test.

10.15 *Fall Time*--Test fall time by raising the detector probe from the test container, rinsing the probe with fresh water, draining and refilling the test container, and replacing the detector in the container. Alternatively, the probe can be immersed in a second clean container. The test container cover may need to be removed to accommodate removal of the detector probe.

10.15.1 Fall time is not applicable to some detectors such as product-soluble detectors and qualitative-output detectors that did not activate in response to addition of product to the test container.

10.15.2 Start the timer or mark the beginning of the fall time test on the recording system when the detector is lifted from the liquid.

10.15.3 Support the detector probe above any counter tops while the test container is being drained.

10.15.4 After the initial liquid is completely drained from the container, rinse the container with fresh water until there is no evidence of product residue. An acetone rinse will facilitate removal of test product. Draining and rinsing should be completed within two minutes. Alternatively, fall time can be tested by rinsing the probe with water and then immersing the probe in water in a second container.

10.15.5 When there is no evidence of test product in the container, add fresh water to the container and replace the detector and container cover.

10.15.6 Monitor the detector output for fall time response. The nature of a fall time response is dependent on whether a detector gives quantitative or qualitative output. Fall time response for a quantitative detector is when the detector output returns to within 5% of its original stable baseline level. Calculate the 5% stable baseline level according to the following equation:

$$5\% \text{ Stable baseline output, cm} = BL + (HL - BL) \times 0.05 \quad (8)$$

where:

BL = stable baseline output, cm; and

HL = stable high level output, cm.

Fall time response for a qualitative detector is when the detector output goes from an activated state to an inactivated state.

10.15.7 Continue fall time monitoring for up to 24 hours.

10.15.8 If the fall time response occurs before the detector has been returned to the container, fall time is less than the amount of elapsed time between when the timer was activated and the fall time response occurred.

10.15.9 Some detectors may not return to baseline conditions when submersed in water. Alternatively, test these detectors with their probes in air.

11. Calculations

11.1 *Relative Percent Difference*--Calculate relative percent difference as follows:

$$\text{Relative percent difference, \%} = 200 \times [(V_1 - V_2)/(V_1 + V_2)] \qquad (9)$$

where:

V_1 = larger value, cm; and

V_2 = smaller value, cm.

11.2 *Coefficient of Variation*--Calculate the coefficient of variation as follows:

$$\text{Coefficient of variation, \%} = (s/\bar{X}) \times 100 \qquad (10)$$

where:

s = standard deviation of n values (n-1 degrees of freedom),cm; and

$\bar{X}$ = mean of n values, cm.

11.3 *Accuracy*--Calculation for accuracy is dependent on the type of output that a detector produces.

11.3.1 *Quantitative detectors*--Accuracy for quantitative detectors is a function of systematic error (bias) and random error (precision). Calculate relative accuracy (RA) of a set of data as follows:

$$\text{Relative accuracy, \%} = (|\bar{d}| + |cc|) / V_r \times 100 \qquad (11)$$

where:

V_r = reference (theoretical) value, cm;

$\bar{d}$ = arithmetic mean of the difference of a data set, Equation 12; and

cc = 2.5% error confidence coefficient (one tailed, Equation 13), cm.

11.3.2 *Mean difference*--Calculate the arithmetic mean of the difference ($\bar{d}$) of a data set as follows:

$$\text{Mean difference, cm} = 1/n \sum_{i=1}^{n} d_i \qquad (12)$$

where:

d_i = measured response - theoretical response, cm.

11.3.3 *Confidence coefficient*--Calculate the one-tailed 2.5% confidence coefficient (cc) as follows:

$$\text{Confidence coefficient, cm} = t_{0.975} \times s/\sqrt{n} \qquad (13)$$

where:

s = the standard deviation (n-1) of the data set, cm; and

$t_{0.975}$ = 2.5% t value from Table 2; and

n = number of tests for a test product at a particular thickness.

11.3.4 *Qualitative detectors*--Use the following formula to calculate the accuracy of qualitative detectors:

$$\text{Accuracy, \%} = 100 \times (r_p/n) \tag{14}$$

where:

r_p = number of positive responses; and

n = number of tests for a particular test product at a particular thickness.

11.4 *Bias*--Bias for quantitative detectors is calculated as follows:

$$\text{Bias, \%} = 100 \times [(\bar{V}_o - V_r)/V_r] \tag{15}$$

where:

V_i = the individual response to test product, cm;

V_r = the reference (theoretical) value, cm; and

$\bar{V}_o$ = the average observed value, $1/n \sum_{i=1}^{n} V_i$, cm;

where:

n = the number of tests with a particular test product at a particular test product thickness.

11.5 *Detection Time*--Calculate detection time according to the following formula:

$$\text{Detection time} = T_2 - T_1 \tag{16}$$

where:

T_1 = clock time when liquid was first added to test container; and

T_2 = clock time when detector output went from an inactivated state to

an activated state for a qualitative detector or from a baseline reading to 5% of stable high level output for a quantitative detector.

11.6 *Fall Time*--Calculate fall time according to the following formula:

$$\text{Fall time} = T_2 - T_1 \tag{17}$$

where:

T_1 = clock time when detector was removed from test container; and

T_2 = clock time when detector output went from an activated state to an inactivated state for a qualitative detector or from a high level reading to within 95% of stable baseline level output for a quantitative detector.

12. Report

12.1 Use the form displayed in Figure 2 to report results. Report the following information:

12.1.1 *Detector type*--Report whether the detector was a quantitative or qualitative type.

12.1.2 *Accuracy*--For quantitative detectors, report relative accuracy for both test products at every test product thickness (0.040, 0.32, and 0.64 cm) according to Equation 11. Report accuracy for qualitative detectors according to Equation 14.

12.1.3 *Precision*--Precision for quantitative detectors is defined as the percent coefficient of variation. Use Equation 10 to calculate coefficient of variation. For quantitative detectors, report precision as the percent coefficient of variation for both test products at every test product thickness (0.040, 0.32, and 0.64 cm). Precision is not applicable to

qualitative detectors, and shall be reported as "NA", not applicable, for these detectors.

12.1.4 *Bias*--Bias at a particular thickness for a particular test product is the percent difference between the average detector output for a series of tests and the actual thickness of test product, Equation 15. For quantitative detectors, report bias for both test products at every test product thickness (0.040, 0.32, and 0.64 cm). Bias is not applicable to qualitative detectors, and shall be reported as "NA," not applicable, for these detectors.

12.1.5 *Detection Time*--Report detection time in the largest convenient units (seconds, minutes, or hours) for both test products at every test product thickness (0.040, 0.32, and 0.64 cm). If detector response is immediate, report detection time as "<1 second." If the detector does not respond within 24 hours, report detection time as "No response in 24 hours."

12.1.6 *Fall Time*--Report fall time in the largest convenient units (seconds, minutes, or hours) for both test products at every test product thickness (0.040, 0.32, and 0.64 cm). Fall time is not applicable to some detectors such as product-soluble detectors and qualitative detectors that did not activate in response to addition of product to the test container. For these detectors, report fall time as "NA," not applicable. Also, record the reason(s) why fall time determination is not applicable. If the detector does not respond within 24 hours, report fall time as "No response in 24 hours."

13. Precision and Bias

13.1 *Precision*--The precision of the procedure in Test Method X 0000 for measuring accuracy and response time for liquid-phase out-of-tank petroleum detectors is being determined.

13.2 *Bias*—Since there is no accepted reference material suitable for determining the bias for the procedure in Test Method X 0000 for measuring accuracy and response time for liquid-phase out-of-tank petroleum detectors, no statement on bias is being made.

TABLE 1. Test Product and Thickness Combinations

Test Product	Layer Thickness, cm
commercial gasoline	0.040
commercial gasoline	0.32
commercial gasoline	0.64
synthetic gasoline	0.040
synthetic gasoline	0.32
synthetic gasoline	0.64

TABLE 2. 2.5% T Values[A]

n-1	$t_{0.975}$
0	12.706
1	4.303
2	3.182
3	2.776
4	2.447
5	2.571
6	2.365
7	2.306
8	2.262
9	2.228
10	2.201
11	2.179
12	2.160
13	2.145
14	2.131
15	2.120
16	2.110
17	2.101
18	2.093
19	2.086
20	2.080
21	2.074
22	2.069
23	2.064
24	2.060
25	2.056
26	2.052
27	2.048
28	2.045
29	2.042
30	2.021
40	2.000
60	1.980
120	1.960

[A]Taken from *CRC Standard Mathematical Tables*, 26th ed. CRC Press, Inc. Boca Raton, FL, 1981.

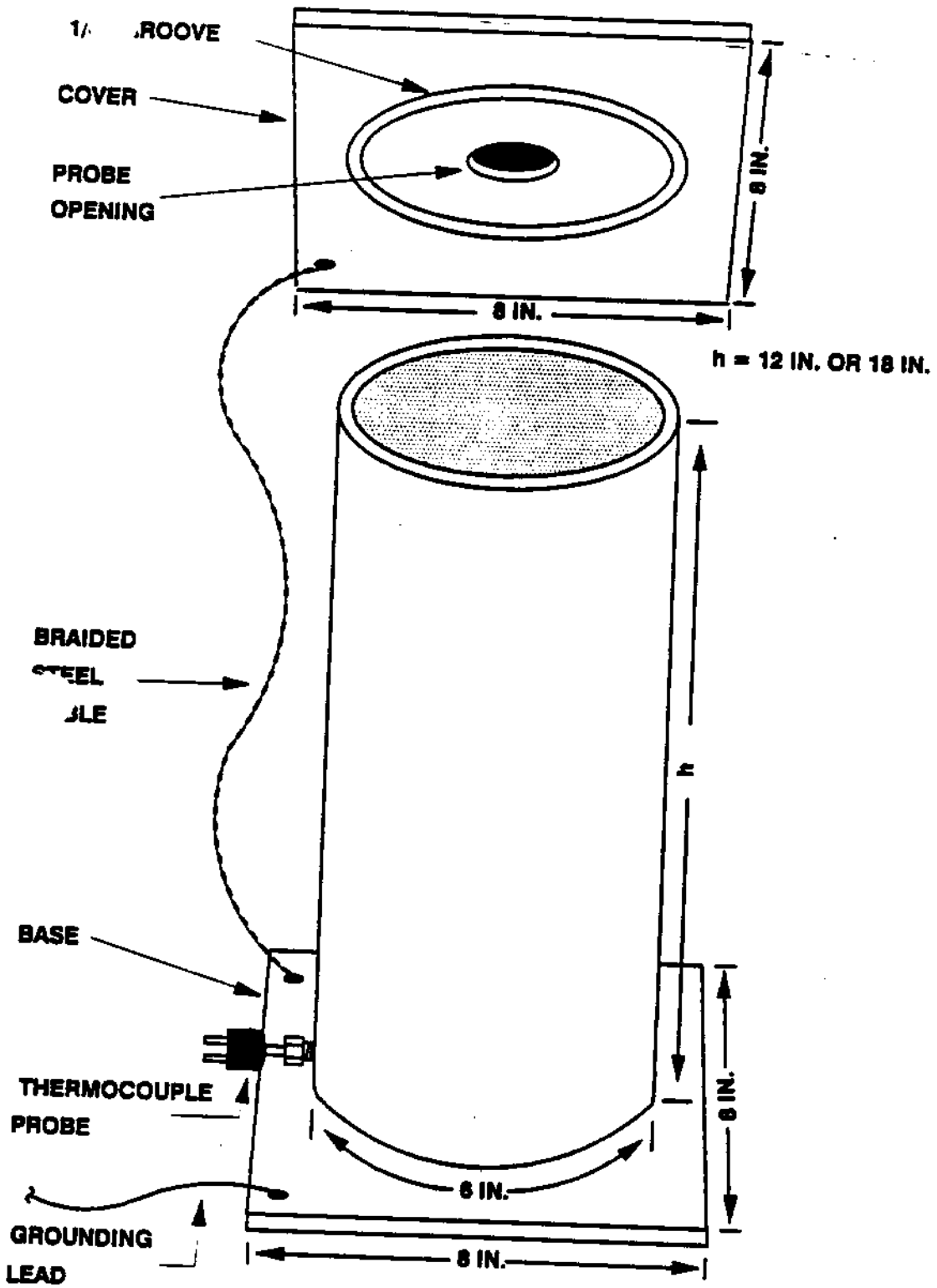

FIG 1. Test Container and Cover

Detector name: _____

Detector type: ___ Quantitative ___ Qualitative

Test Product	Thickness, cm	Accuracy, %	Precision, %	Bias, %	Detection Time	Fall Time
commercial gasoline	0.040	_____	_____	_____	_____	_____
commercial gasoline	0.32	_____	_____	_____	_____	_____
commercial gasoline	0.64	_____	_____	_____	_____	_____
synthetic gasoline	0.040	_____	_____	_____	_____	_____
synthetic gasoline	0.32	_____	_____	_____	_____	_____
synthetic gasoline	0.64	_____	_____	_____	_____	_____

COMMENTS: _____

FIG 2. Data Recording Form

ANNEX

(Mandatory Information)

A1.1 Gasoline (including Leaded Gasoline)

Danger--Extremely flammable. Vapors harmful if inhaled.

Vapors may cause flash fire.

Contains toxic lead antiknock components. Harmful if absorbed through skin.

Keep away from heat, sparks, and open flames.

Keep container closed.

Use with adequate ventilation. Avoid buildup of vapors and eliminate all sources of ignition especially nonexplosion-proof electrical apparatus and heaters.

Avoid prolonged breathing of vapor or spray mist. Avoid prolonged or repeated skin contact.

A1.2 Synthetic Gasoline Mixture

Danger--Extremely flammable. Vapors harmful if inhaled. Vapors may cause flash fire. Contains toxic benzene and other hydrocarbon substances. (See Method X 0000).

Harmful if absorbed through skin.

Keep away from heat, sparks, and open flames.

Keep container closed. Use with adequate ventilation.

Avoid buildup of vapors and eliminate all sources of ignition, especially nonexplosion-proof electric apparatus and heaters.

Avoid prolonged breathing of vapors or spray mist.

Avoid prolonged or repeated skin contact.

Designation: X 0002

Standard Test Method for

SPECIFICITY FOR LIQUID-PHASE OUT-OF-TANK PETROLEUM DETECTORS

1. Scope

1.1 This test method covers determination of specificity of liquid-phase out-of-tank petroleum hydrocarbon leak detectors that utilize ground water monitoring wells.

1.2 This method is applicable to only the components associated with detection of liquid-phase petroleum releases for detection systems utilizing multiple operating principles.

1.3 *This standard may involve hazardous materials, operations, and equipment. This standard does not purport to address all of the safety problems associated with its use. It is the responsibility of the user of this standard to establish appropriate safety and health practices and determine the applicability of regulatory limitations prior to use.*

2. Referenced Documents

2.1 *ASTM Standards*:

D 1125 Standard Test Methods for Electrical Conductivity and Resistivity of Water

E 1 Standard Specification for ASTM Thermometers

E 456 Standard Terminology Relating to Statistics

2.2 EPA Leak Detector Standards:

X 0004 Standard Practice for Preparation of Synthetic Gasoline for Testing Out-of-Tank Petroleum Detectors.

3. Terminology

3.1 *Definitions* — For formal definitions of statistical terms, see Terminology E 456.

3.2. Descriptions of Terms Specific to This Method

3.2.1 *activated*--refers to the state of a qualitative detector's response when indicating the presence of hydrocarbons.

3.2.2 *non-activated*--refers to the state of a qualitative detector's response when indicating that no hydrocarbons are detected.

3.2.3 *probe*--component of a detection system that must come into contact with petroleum product before the product can be detected.

3.2.4 *qualitative responses*--type of detector response that indicates only the presence or absence of hydrocarbons without determining the specific hydrocarbon thickness.

3.2.5 *quantitative responses*--type of detector response that quantitates the concentration of the hydrocarbon present.

3.2.6 *response*--detector's indication of the presence of petroleum hydrocarbons. Responses can be qualitative or quantitative.

3.2.7 *specificity*--ability of a detector to respond to various substances.

3.2.8 *test product*--commercial or synthetic gasoline used to characterize detector performance.

4. Summary of Test Method

4.1 Detector probes are supported in a container that has a 1.27-cm-thick layer of liquid hydrocarbon test product on water. Probes are exposed to each of seven different test products. Detector response is monitored for up to 24 hours.

5. Significance and Use

5.1 For liquid-phase petroleum hydrocarbon detectors, specificity is a measure of how sensitive a detector is to different test products. Specificity measurements provide a means for estimating the suitability of a detector for different stored products.

5.2 Results obtained using this method will permit the most advantageous use of a detector. Weaknesses as well as strengths of the instrument should become apparent. It is not the interest of this method to compare similar detectors of different manufacture, but to enable the user to choose a suitable detector.

6. Interferences

6.1 Conditions that can cause interferences with this method include temperature changes, high temperatures, test product evaporation, vibrations, and test products containing water-miscible substances (e.g., alcohol). To avoid these conditions, tests should be conducted at constant (±3°C), normal laboratory temperatures on a stable base. Evaporation can be reduced by covering the test apparatus and maintaining a seal around the detector probe and test container openings.

6.2 It is difficult to verify the thickness of thin layers of liquid hydrocarbon product on water. For this reason, product thicknesses are determined by calculation. For these calculations to be accurate, variations in the dimensions of the test container should be minimal. Use containers

that have straight vertical sides with no visible protuberances or indentations.

7. Apparatus

7.1 *Test Container*--All tests should be performed in non-reactive containers with constant proportions. The containers hold water and test product during testing. An example test container is depicted in Figure 1.

7.1.1 The test container should be cylindrical so that the thickness of test product added to the container can be accurately calculated. The container walls should be perpendicular to its bottom with no visible protuberances or indentations throughout their height. The container diameter should not deviate by more than 0.1 mm (0.004 in.) throughout the region where hydrocarbon liquid will be contained during testing. The bottom of the container can be rounded as long as the rounded portion does not extend above the water level during tests. Also, the container walls should not deflect visibly when filled with liquid. A typical container can be constructed by welding a 6-inch outside diameter, Type 304L, seamless, stainless steel pipe section to a square plate of the same material, as depicted in Figure 1. The pipe and base plate sections should be at least 1/4 inch thick to minimize warping during welding.

7.1.2 Container dimensions are dependent on detector probe dimensions and operation. Containers with an inside diameter of 5-1/2 inches and a height between 12 to 18 inches should be adequate for most detectors.

7.1.3 The container and its base should be machined to accommodate a thermocouple, a grounding wire, and a cover-grounding cable. Thermocouple fittings can be accommodated in a 3/8-inch, NPT-threaded hole. The hole should be located so that the thermocouple does not interfere with operation

of the detector probe. A grounding wire and cover-grounding cable can be accommodated by fitting the container base with two #10 screw holes.

7.2 *Container Cover*--A cover that fits snugly over the container and supports the detector probe should be used. The cover should prevent vapor loss from the container.

7.2.1 An appropriate cover can be made by machining a 1/4-inch thick by 8-inch square, stainless steel plate. A 1/8-inch-deep groove should be cut into one side of the plate. The width and diameter of the groove should allow the plate to fit snugly onto the test container. The plate should have a hole to accommodate the detector probe. The diameter of the probe hole is dependent on the dimensions of the probe.

7.2.2 Connect the cover to the container with a braided steel cable. The cable grounds the cover to the container. Remove any plastic or rubber insulation at the ends of the braided steel cable before fastening. A hole for a #10 screw should be drilled and tapped into the cover to fasten the cable.

7.3 *Timer*--A timer that is accurate and precise to at least one second per 10 minutes is required. Alternatively, a chart recorder or other data acquisition system can be used. If a chart recorder or other data acquisition system is to be used, the timer is not required. If used, the recorder or data acquisition system timing must be accurate and precise to at least one second per 10 minutes.

7.4 *Electronic Recorder*--A chart recorder or other electronic data acquisition system may be used if it is compatible with the specific detector being evaluated. The output of the data recorder should be accurate and precise to ±2% over the range of output from a quantitative-output detector. A

data recorder used with a qualitative-output detector must unambiguously identify activated and inactivated states.

7.5 *Thermocouple*--A thermocouple and temperature readout, or equivalent, that responds from 0°C to 40°C and is accurate and precise to within 1°C over this range is needed.

7.6 *Thermometer*--ASTM Solvents Distillation Thermometer having a range from -2°C to 52°C and conforming to the requirements for Thermometer 37C as prescribed in Specification E 1.

7.7 *String*--Approximately 30 cm of cotton or nylon string with a diameter no greater than 0.2 cm may be needed to measure the cross-sectional area of the detector. Alternatively, calipers with 0.1-mm or finer gradations may be used.

7.8 *Calipers*--0.1 mm or finer gradations capable of measuring inside diameter of test container.

8. Reagents and Materials

8.1 *Purity of Reagents*--Reagent grade chemicals shall be used in all tests, except that commercial fuels may be purchased from ordinary retail outlets. Unless otherwise indicated, it is intended that all reagents conform to the specifications of the Committee on Analytical Reagents for the American Chemical Society where such specifications are available.[1] Other grades may be used, provided it is first ascertained that the reagent is of sufficiently high purity to permit its use without lessening the accuracy of determination.

---

[1]"Reagent Chemicals, American Chemical Society Specifications," Am. Chemical Soc., Washington, D.C. For suggestions on the testing of reagents not listed by the American Chemicals Society, see "Reagent Chemicals and Standards," by Joseph Rosin, D. Van Nostrand Co., In., New York, NY, and the "United States Pharmacopeia."

8.2 *Purity of Water*--Unless otherwise indicated, references to water shall be understood to mean drinking water or other relatively pure water with an electrical conductivity (Method D 1125) of at least 50 μmhos/cm.

8.3 *Commercial Gasoline*--Commercial gasoline test product shall be unleaded regular or premium gasoline that is purchased at a retail outlet. The gasoline shall contain less than 2% water-miscible substances. (Danger--*Commercial gasoline is extremely flammable. Vapors are harmful if inhaled. Leaded gasoline should not be used because there are significant additional hazards associated with its handling and disposal. See Annex A1.1.*

8.4 *Diesel Fuel*--Grade 2 automotive diesel fuel test product shall be purchased at a retail outlet. The fuel shall contain less than 2% water-miscible substances. (Danger--*Diesel fuel is flammable. Vapors are harmful if inhaled. See Annex A1.2.*)

8.5 *n-Hexane* (C_6H_{12}). (Danger--*n-Hexane is extremely flammable. Vapors are harmful if inhaled. See Annex A1.3.*)

8.6 *Jet Fuel*--Jet-A jet fuel test product shall be purchased at a retail outlet. The fuel shall contain less than 2% water-miscible substances. (Danger--*Jet fuel is flammable. Vapors are harmful if inhaled. See Annex A1.4.*)

8.7 *Synthetic Gasoline*--Synthetic gasoline, as used in this method, is a 12-component mixture that is roughly representative of automotive gasoline prepared according to Practice X 0004. (Danger--*Synthetic gasoline is extremely flammable. Vapors are harmful if inhaled. See Annex A1.5.*)

8.8 *Toluene* ($CH_3C_6H_5$). (Danger--*Toluene is extremely flammable. Vapors are harmful if inhaled. See Annex A1.6.*)

8.9 *Xylene(s)* [$2(CH_3)C_6H_4$]. (Danger--*Xylene is flammable. Vapors are harmful if inhaled. See Annex A1.7.*)

9. Calibration and Standardization

9.1 *Chart Recorder or Other Data Recording System*--If used, a chart recorder or other data recording system should be calibrated along with the detector. The data recording system should be calibrated according to instructions from its manufacturer and the detector manufacturer. Also, any recording device should be compatible with the detector being investigated. Consult specifications from the manufacturers of the recording device and the detector.

9.2 *Detector*--Because of wide design variability among different petroleum detectors, it is impossible to give complete calibration instructions for all possible detector designs. Calibrate all detectors according to manufacturer instructions.

9.3 *Probe Cross-Sectional Area*--Estimate the area of the cross-section of the probe that will be parallel to and at the same level as test product.

9.3.1 The area of cylindrical or similarly shaped, many-sided polygonal probe cross-sections should be measured by wrapping a thin string around the detector cross-section that is parallel to and at the level of test product. Fit one loop of string tightly around the detector, and cut or mark the string where it begins to overlap itself. The length of one loop of string around the detector is the perimeter. Derive the detector radius from the following equation:

$$\text{Radius, cm} = p/(2 \times 3.1416) \qquad (1)$$

where:

p = length of perimeter, cm.

The following formula should be used to calculate the area of a round cross-section:

$$\text{Cross-sectional area, cm}^2 = 3.1416 \times r^2 \qquad (2)$$

where:

r = radius of the cross-section, cm.

9.3.2 Alternatively, the probe diameter can be measured with calipers. The radius, which is half the diameter, can then be used to calculate the cross-sectional area by Equation 2.

9.3.3 Determine the area of rectangular cross-sections by measuring the length and width of the detector cross-section that is parallel to and at the level of test product. Calculate the cross-sectional area using the following equation:

$$\text{Cross-sectional area, cm}^2 = l \times w \qquad (3)$$

where:

l = length, cm; and

w = width, cm.

9.3.4 For detectors that have more than one part that will displace test product, calculate the cross-sectional area for each part. The total area for the probe is the sum of cross-sectional areas for individual parts.

9.3.5 For irregularly shaped probes, determine the cross-sectional area by immersing the probe in water. Make two marks part-way up one side of a transparent container that will contain the detector probe. The marks should be 1.27 cm apart, and the container should have vertical walls in the region where the marks are made. Add water to the lower mark. Using a buret, determine the volume of water required to reach the upper mark to the nearest 0.1 mL. Empty the container, and suspend the detector probe inside the container. The region of the probe that will contact test product should be centered between the container marks. Again, fill the container to the lower

mark with water and determine the volume of water to reach the upper mark. Calculate the probe cross-sectional area using the following equation:

$$\text{Probe area, cm}^2 = (V_1 - V_p)/1.27 \quad (4)$$

where:

V_1 = Volume between marks without probe, mL;

V_p = Volume between marks with probe, mL; and

1.27 = height of column of water displaced, cm.

9.4 *Thermocouple*—Perform side-by-side multipoint calibrations for each thermocouple used in the test procedure in a 1-L glass beaker filled with water. The reference thermometer should be an ASTM solvents distillation thermometer having a range from -2°C to 52°C and conforming to the requirements for Thermometer 37C as prescribed in Specification E 1. The levels tested are low (room temperature - 10°C), room temperature, and high (room temperature + 10°C).

9.4.1 Insert both the thermocouple and reference thermometer into the beaker of water and add small quantities of ice. Allow the ice to melt and the temperature to stabilize. Continue adding ice until a steady-state reading (±0.5°C over two minutes) of room temperature - 10°C (±2°C) occurs.

9.4.2 Repeat this procedure using room temperature water (15°C to 30°C), and room temperature + 10°C (±2°C) water. If the temperature difference is more than 1°C, either repeat the test with the same thermocouple or replace the thermocouple and repeat the test until it is acceptable.

9.4.3 Perform thermocouple calibration at the onset of testing and at least once a year.

9.5 *Test Container Area*--Accurately measure the inside diameter of the test container to 0.1 mm or finer. Calculate the container cross-sectional area with the following formula:

$$\text{Area, cm}^2 = 0.785 \times d_c^2 \quad (5)$$

where:

d_c = test container inside diameter, cm.

10. Procedure

10.1 *Test Series*--The detector should be tested with each of the test products listed in Table 1 at a hydrocarbon layer thickness of 1.27 cm.

Note 1--Do not reuse product-soluble components that have been exposed to product. Instead, replace these components.

10.1.1 Perform tests in a random order of test products.

10.2 Add an appropriate volume of water to the container. The volume of water added must allow the detector probe to be fully functional. If the probe operational characteristics do not place limitations on the water volume, add 2 L of water to the container. The water should be within 2°C of room temperature, which should be between 15°C and 28°C.

10.3 Place the cover on the container and connect the steel braided cable between the cover and the container.

10.4 Mount the probe in the test container so that it is fully functional and forms a tight seal with the cover. The manufacturer's specifications should give details on the placement of the detector in a well with regard to the bottom of the well and in relation to the depth of water in the well. Place the detector in the test container as if the test container were a well.

10.5 Electrically connect the test container to an earth ground to dissipate static electricity.

10.6 Connect the detector output to a chart recorder or other data acquisition system if one is being used. All connections should be in compliance with specifications from the manufacturers of the detector and the data recording system.

10.7 Calibrate the detector if necessary. Many detectors, such as product-soluble detectors, do not require any calibration. Perform calibrations, if necessary, according to manufacturer recommendations. Calibration may need to occur before mounting in the test container. If a data recording system is being used, it should be calibrated with the detector. Calibrate the data acquisition system according to manufacturer instructions.

10.8 *Blank Test*—Perform a blank test by monitoring the detector output for 30 minutes while the probe is in water.

10.8.1 For quantitative detectors, record the stable output level from the detector at the end of the 30-minute period. If the detector output is not stable after 30 minutes, wait until the output becomes stable. Record the stable output level.

10.8.2 If a qualitative detector goes to an activated state during the blank test, correct the detector malfunction or replace it with a properly operating detector.

10.9 Determine the amount of product to add to the water. It is important to accurately calculate the amount of product that is needed to form a product layer. Calculate the volume of product to add to the test container with the following equation:

$$\text{Volume, mL} = t \times (a_c - a_d) \qquad (6)$$

where:

t = desired product thickness, cm;

a_c = test container cross-sectional area, cm^2; and

a_d = estimated detector cross-sectional area, cm^2.

10.10 Remove the container cover with the attached detector probe from the container, and add the appropriate volume of test product with a glass buret. Pour the test product without splashing or contacting the container walls.

10.11 Cover the top of the test container immediately to reduce test product evaporation and to reduce ambient vibrations from air currents.

10.12 *Data Recording*--Begin monitoring the detector response immediately after replacing the probe and cover. Do not stir or otherwise disturb the contents of the test container. The detector output may be recorded by hand, with a chart recorder, or with another type of electronic data acquisition system. The nature of response monitoring is dependent on whether the device signal is quantitative or qualitative.

10.12.1 For quantitative detectors, monitor the output signal at least until the signal becomes stable or 24 hours elapses, whichever is shorter. Record the detector output at the end of the test period.

10.12.2 For qualitative detectors, monitor the detector output at least until it activates or 24 hours elapses, whichever is shorter. Record the detector output state (activated or not activated) at the end of the test period.

11. Calculations

11.1 *Specificity for Quantitative Detectors*--Specificity for quantitative detectors is the ratio of detector output, or measured thickness, to the actual thickness of hydrocarbon test product expressed as a percentage. Use the following equation to calculate specificity for quantitative detectors:

$$\text{Specificity, \%} = 100 \times m_d/t \quad (7)$$

where:

m_d = detector's output reading, cm; and

t = hydrocarbon thickness, cm (t = 1.27 cm).

12. Interpretation of Results

12.1 *Specificity for Qualitative Detectors*--Specificity for qualitative devices should be reported as "activated" if the detector responds within 24 hours. Otherwise, specificity should be reported as "inactivated."

13. Report

13.1 Report detector type (quantitative or qualitative) and specificity results for each test product.

14. Precision and Bias

14.1 *Precision*--The precision of the procedure in Test Method X 0002 for measuring specificity for liquid-phase out-of-tank petroleum detectors is being determined.

14.2 *Bias*--Since there is no accepted reference material suitable for determining the bias for the procedure in Test Method X 0002 for measuring specificity for liquid-phase out-of-tank petroleum detectors, no statement on bias is being made.

TABLE 1. Specificity Test Products

commercial gasoline
diesel fuel
n-hexane
jet fuel
synthetic gasoline
toluene
xylene(s)

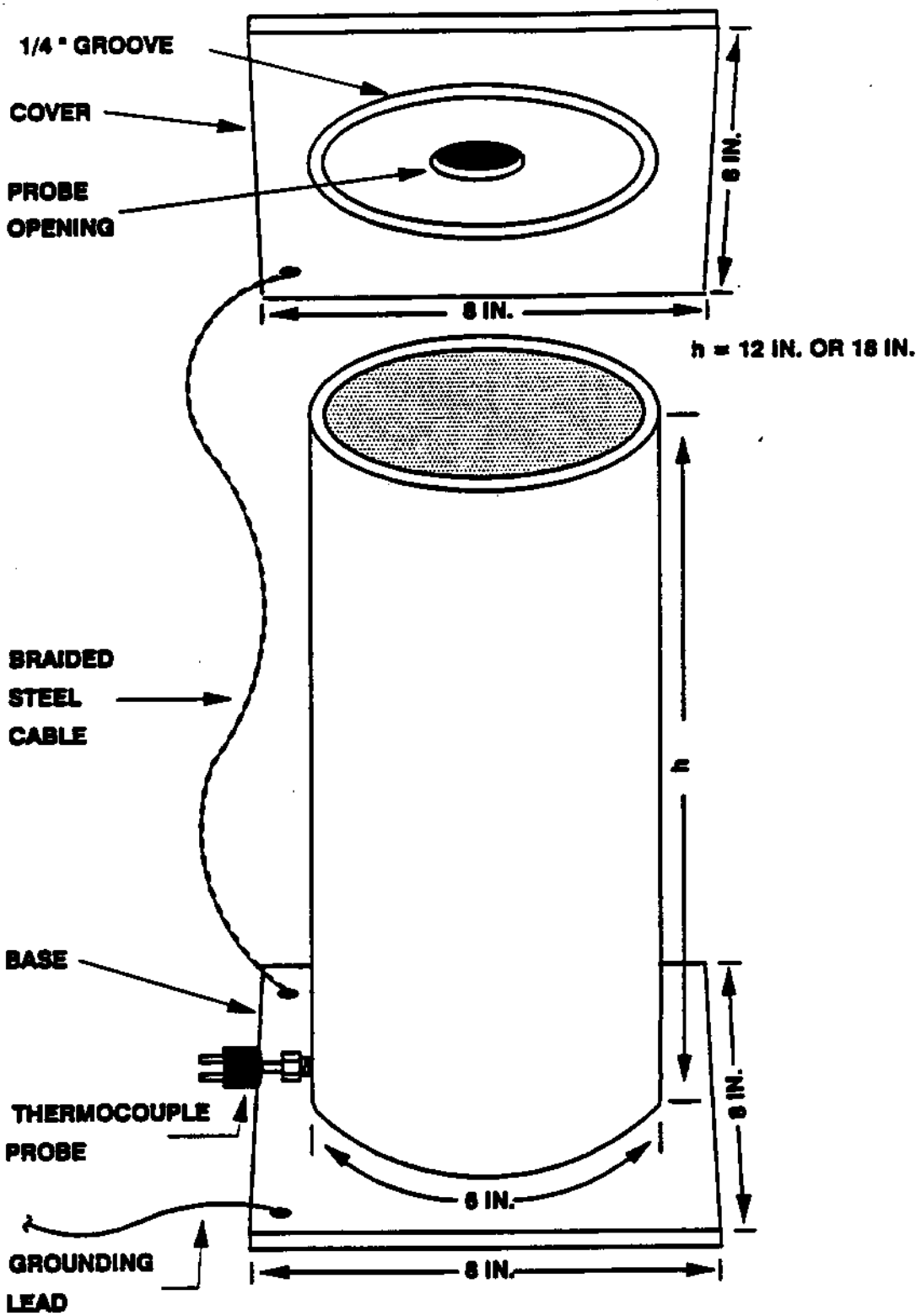

FIG 1. Test Container and Cover

ANNEX

(Mandatory Information)

A1.1 Gasoline (including Leaded Gasoline)

Danger--Extremely flammable. Vapors harmful if inhaled.

Vapors may cause flash fire.

Contains toxic lead antiknock components. Harmful if absorbed through skin.

Keep away from heat, sparks, and open flames.

Keep container closed.

Use with adequate ventilation. Avoid buildup of vapors and eliminate all sources of ignition especially nonexplosion-proof electrical apparatus and heaters.

Avoid prolonged breathing of vapor or spray mist. Avoid prolonged or repeated skin contact.

A1.2 n-Hexane

Danger--Extremely flammable. Vapors harmful if inhaled.

Vapors may cause flash fire.

Keep away from heat, sparks, and open flames.

Keep container closed.

Use with adequate ventilation. Avoid buildup of vapors and eliminate all sources of ignition especially nonexplosion-proof electrical apparatus and heaters.

Avoid prolonged breathing of vapor or spray mist. Avoid prolonged or repeated skin contact.

A1.2 Jet Fuel

Danger--Fammable. Vapors harmful if inhaled.

Vapors may cause flash fire.

Keep away from heat, sparks, and open flames.

Keep container closed.

Use with adequate ventilation. Avoid buildup of vapors and eliminate all sources of ignition especially nonexplosion-proof electrical apparatus and heaters.

Avoid prolonged breathing of vapor or spray mist. Avoid prolonged or repeated skin contact.

A1.4 Synthetic Gasoline Mixture

Danger--Extremely flammable. Vapors harmful if inhaled. Vapors may cause flash fire. Contains toxic benzene and other hydrocarbon substances (See Method X 0004).

Harmful if absorbed through skin.

Keep away from heat, sparks, and open flames.

Keep container closed. Use with adequate ventilation.

Avoid buildup of vapors and eliminate all sources of ignition, especially nonexplosion-proof electric apparatus and heaters.

Avoid prolonged breathing of vapors or spray mist.

Avoid prolonged or repeated skin contact.

A1.5 Toluene

Danger--Extremely flammable. Vapors harmful if inhaled.

Vapors may cause flash fire.

Keep away from heat, sparks, and open flames.

Keep container closed.

Use with adequate ventilation. Avoid buildup of vapors and eliminate all sources of ignition especially nonexplosion-proof electrical apparatus and heaters.

Avoid prolonged breathing of vapor or spray mist. Avoid prolonged or repeated skin contact.

A1.7 Xylene(s)

Danger--Flammable. Vapors harmful if inhaled.

Vapors may cause flash fire.

Keep away from heat, sparks, and open flames.

Keep container closed.

Use with adequate ventilation. Avoid buildup of vapors and eliminate all sources of ignition especially nonexplosion-proof electrical apparatus and heaters.

Avoid prolonged breathing of vapor or spray mist. Avoid prolonged or repeated skin contact.

Designation: X 0005

Standard Test Method for

LOWER DETECTION LIMIT FOR LIQUID-PHASE OUT-OF-TANK PETROLEUM DETECTORS

1. Scope

1.1 This test method covers determination of lower detection limit of liquid-phase out-of-tank petroleum hydrocarbon leak detectors that utilize ground water monitoring wells.

1.2 This method is applicable to only the components associated with detection of liquid-phase petroleum releases for detection systems utilizing multiple operating principles.

1.3 *This standard may involve hazardous materials, operations, and equipment. This standard does not purport to address all of the safety problems associated with its use. It is the responsibility of the user of this standard to establish appropriate safety and health practices and determine the applicability of regulatory limitations prior to use.*

2. Referenced Documents

2.1 *ASTM Standards*:

D 1125 Standard Test Methods for Electrical Conductivity and Resistivity of Water

E 1 Standard Specification for ASTM THermometers

E 456 Standard Terminology Relating to Statistics

2.2 *EPA Leak Detection Standards:*

X 0004 Standard Practice for Preparation of Synthetic Gasoline for Testing Out-of-Tank Petroleum Detectors

3. Terminology

3.1 *Definitions* — For formal definitions of statistical terms, see Terminology E 456.

3.2. Descriptions of Terms Specific to This Method

3.2.1 *activated*—refers to the state of a qualitative detector's response when indicating the presence of hydrocarbons.

3.2.2 *bias*—systematic error inherent in a method. Bias may be positive or negative.

3.2.3 *critical level*—point at which a detector's response becomes significantly different from a blank response.

3.2.4 *lower detection limit*—minimum thickness of hydrocarbon test liquid that has only a 5% chance of not being detected at a 95% confidence level.

3.2.5 *non-activated*—refers to the state of a qualitative detector's response when indicating that no hydrocarbons are detected.

3.2.6 *probe*—component of a detection system that must come into contact with petroleum product before the product can be detected.

3.2.7 *qualitative responses*—type of detector response that indicates only the presence or absence of hydrocarbons without determining the specific hydrocarbon thickness.

3.2.8 *quantitative responses*—type of detector response that quantitates the concentration of the hydrocarbon present.

3.2.9 *response*—detector's indication of the presence of petroleum hydrocarbons. Responses can be qualitative or quantitative.

3.2.10 *test product*—commercial or synthetic gasoline used to characterize detector performance.

4. Summary of Test Method

4.1 Detector probes are supported in a container that has a layer of liquid hydrocarbon test product on water. Detectors are screened at several different test product thicknesses to determine the lowest thickness to which the detectors will respond reliably. Test product thicknesses are 0.01 cm, 0.02 cm, 0.04 cm, 0.08 cm 0.16 cm, 0.32 cm, 0.64 cm, and 1.27 cm. Detector response is monitored for up to 24 hours. The performance of detectors is tested with commercial unleaded gasoline and synthetic gasoline made according to Practice X 0004 with compounds that are representative of components of gasoline.

4.2 The thickness at which a detector is tested is referred to as the lower detection limit, or "LDL." For qualitative detectors, the next lowest thickness is referred to as "LDL-." Quantitative detectors require seven tests for each test liquid at the LDL thickness. Qualitative detectors require a total of twelve tests for each liquid, six tests at both the LDL and LDL- thicknesses. If a qualitative detector fails to respond positively to one or more of the six LDL tests, then the LDL thickness will be increased and six more tests are performed at the new LDL thickness. Similarly, if a detector responds positively six times to the LDL thickness and one or more times to the LDL- thickness, the LDL- thickness is decreased and six more tests are performed at the new LDL- thickness.

5. Significance and Use

5.1 For liquid-phase petroleum hydrocarbon detectors, the lower detection limit, or "LDL," is the minimum hydrocarbon thickness to which the detector will respond positively. This method uses liquid hydrocarbon thickness from 0.01 cm (1/250 in.) to 1.27 cm (1/2 in.). Commercial unleaded gasoline and a laboratory-generated synthetic gasoline mixture are the hydrocarbon liquids used in this method.

5.2 The lower limits of a detector's ability to detect hydrocarbons may be described in terms of two types of detection errors that are possible. One type of error involves concluding that hydrocarbon product is present when there actually is not any product. This is the classic "false alarm," which is referred to as a false positive or Type I error. The risk of making a Type I error is usually denoted as α (alpha). The second type of error that can be made is referred to as a false negative or Type II error. This is the error of not detecting the presence of hydrocarbon product, and the risk associated with making this type of error is denoted as β (beta). Limits of detectors described below are based on the risks associated with these two types of error to prescribed liquid hydrocarbon thicknesses.

5.3 Data obtained from repeated testing of quantitative detectors will be used to define two characteristics associated with detector capabilities. These two characteristics, corresponding to the two possible types of detection errors described above, will be referred to as the critical level and the detection limit. The critical level is the decision-point test-liquid thickness, above which hydrocarbons are "detected" and below which they are "not detected." For quantitative detectors, the critical point will be established at a thickness corresponding to a 5% risk of false positive error. The detection limit will be defined as a second, higher test-liquid thickness,

at which the risk of false negative error is no more than 5%. The estimated magnitude of α and β risk assume a normal error distribution.

5.4 Figure 1 shows the critical level, the lower detection limit, and the α and β risks applicable to quantitative detectors. The critical level is the point at which detector response becomes significantly different from a blank response. The two bell-shaped curves represent probability density functions (PDF). The curve on the left represents the PDF for possible detector responses for a test liquid having a true hydrocarbon thickness of zero. The critical level (L_c) is located on the right tail of the curve. The critical level will be established using a one-sided tolerance limit for normal distribution. Using the tolerance limit approach, it may be stated with 95 percent confidence that a false positive error will be made no more than five percent of the time.

5.5 The curve to the right in Figure 1 represents the PDF for possible detector responses for a test liquid having a true hydrocarbon thickness equal to the detection limit (L_D). The detection limit will be established by letting the false negative error coincide with the false positive error at the critical level and then applying the tolerance limit equation. Using the tolerance limit, it can be stated with 95 percent confidence that the lower detection limit thickness is the lowest thickness that has only a five percent chance of not being detected.

5.6 Qualitative detectors require a different test strategy because the data collected are attribute measurements. The critical level and the detection limit may still be used to characterize detector performance, and the risk of detection error may still be expressed in terms of α and β. However, different levels of α and β will be used for these detectors. Figure 2 illustrates the probability of detection versus concentration for

qualitative detectors. The false positive risk α is a property dependent on the detector and represents the probability that the detector will go to an activated state at zero concentration. For these detectors, the critical level is defined as the test liquid thickness at which the detector has a fifty percent probability of detection. The lower detection limit is the test liquid thickness at which the detector has a probability of not activating which is equal to the false negative risk β (beta).

5.7 The critical level and lower detection limit will be established with 95 percent confidence to be within a range bounded by a lower test liquid thickness (LDL-) and an upper test liquid thickness (LDL). LDL and LDL- will be established by measuring the detector response six times at the LDL concentration and six times at the LDL- concentration. If the detector responds six times at the higher concentration and does not respond to the lower concentration, it will be concluded with 95 percent confidence that the critical level and lower detection limit are between the LDL- and LDL thicknesses. If, however, the detector fails to respond to one or more of the six tests, the LDL thickness is increased and six more tests are performed at the new LDL thickness. Similarly, if the detector responds six times to the LDL thickness and one or more times to the LDL- thickness, the LDL- thickness is decreased and six more tests are performed at the new LDL- thickness.

5.8 A risk of 50 percent will be set for false negative error (β) and false positive error (α). This risk level requires six tests at the LDL and LDL- test liquid thicknesses. By establishing these risk levels, it can be stated with 95 percent confidence that the detector will respond to a minimum of 50 percent to the LDL thickness and a maximum of 50 percent to the LDL- thickness. The number of experiments is based on a binomial distribution and is directly related to false positive risk and false negative risk.

5.9 Results obtained using this method will permit the most advantageous use of a detector. Weaknesses as well as strengths of the instrument should become apparent. It is not the interest of this method to compare similar detectors of different manufacture, but to enable the user to choose a suitable detector.

6. Interferences

6.1 Conditions that can cause interferences with this method include temperature changes, high temperatures, test product evaporation, vibrations, and test products containing water-miscible substances (e.g., alcohol). To avoid these conditions, tests should be conducted at constant (±3°C), normal laboratory temperatures on a stable base. Evaporation can be reduced by covering the test apparatus and maintaining a seal around the detector probe and test container openings.

6.2 It is difficult to verify the thickness of thin layers of liquid hydrocarbon product on water. For this reason, product thicknesses are determined by calculation. For these calculations to be accurate, variations in the dimensions of the test container should be minimal. Use containers that have straight vertical sides with no visible protuberances or indentations.

7. Apparatus

7.1 *Test Container*—All tests should be performed in non-reactive containers with constant proportions. The containers hold water and test product during testing. An example test container is depicted in Figure 1.

7.1.1 The test container should be cylindrical so that the thickness of test product added to the container can be accurately calculated. The container walls should be perpendicular to its bottom with no visible protuberances or indentations throughout their height. The container diameter

should not deviate by more than 0.1 mm (0.004 in.) throughout the region where hydrocarbon liquid will be contained during testing. The bottom of the container can be rounded as long as the rounded portion does not extend above the water level during tests. Also, the container walls should not deflect visibly when filled with liquid. A typical container can be constructed by welding a 6-inch outside diameter, Type 304L, seamless, stainless steel pipe section to a square plate of the same material, as depicted in Figure 1. The pipe and base plate sections should be at least 1/4-inch thick to minimize warping during welding.

7.1.2 Container dimensions are dependent on detector probe dimensions and operation. Containers with an inside diameter of 5-1/2 inches and a height between 12 to 18 inches should be adequate for most detectors.

7.1.3 The container and its base should be machined to accommodate a thermocouple, a grounding wire, and a cover-grounding cable. Thermocouple fittings can be accommodated in a 3/8-inch, NPT-threaded hole. The hole should be located so that the thermocouple does not interfere with operation of the detector probe. A grounding wire and cover-grounding cable can be accommodated by fitting the container base with two #10 screw holes.

7.2 *Container Cover*—A cover that fits snugly over the container and supports the detector probe should be used. The cover should prevent vapor loss from the container.

7.2.1 An appropriate cover can be made by machining a 1/4-inch thick by 8-inch square, stainless steel plate. A 1/8-inch-deep groove should be cut into one side of the plate. The width and diameter of the groove should allow the plate to fit snugly onto the test container. The plate should have a hole to accommodate the detector probe. The diameter of the probe hole is dependent on the dimensions of the probe.

7.2.2 Connect the cover to the container with a braided steel cable. The cable grounds the cover to the container. Remove any plastic or rubber insulation at the ends of the braided steel cable before fastening. A hole for a #10 screw should be drilled and tapped into the cover to fasten the cable.

7.3 *Timer*—A timer that is accurate and precise to at least one second per 10 minutes is required. Alternatively, a chart recorder or other data acquisition system can be used. If a chart recorder or other data acquisition system is to be used, the timer is not required. If used, the recorder or data acquisition system timing must be accurate and precise to at least one second per 10 minutes.

7.4 *Electronic Recorder*--A chart recorder or other electronic data acquisition system may be used if it is compatible with the specific detector being evaluated. The output of the data recorder should be accurate and precise to ±2% over the range of output from a quantitative-output detector. A data recorder used with a qualitative-output detector must unambiguously identify activated and inactivated states.

7.5 *Thermocouple*—A thermocouple and temperature readout, or equivalent, that responds from 0°C to 40°C and is accurate and precise to within 1°C over this range is needed.

7.6 *Thermometer*--ASTM Solvents Distillation Thermometer having a range from -2°C to 52°C and conforming to the requirements for Thermometer 37C as prescribed in Specification E 1.

7.7 *String*--Approximately 30 cm of cotton or nylon string with a diameter no greater than 0.2 cm may be needed to measure the cross-sectional area of the detector. Alternatively, calipers with 0.1-mm or finer gradations may be used.

7.8 *Calipers*—0.1 mm or finer gradations capable of measuring inside diameter of test container.

7.9 *Buret(s)*—Depending on the volume of test liquid to be used for tests, one or more burets must be acquired. Burets may range in size from 5 mL to 100 mL.

Note 1—Volumetric syringes for volumes of 10 mL or less are a lower cost alternative to burets.

8. Reagents and Materials

8.1 *Purity of Reagents*—Reagent grade chemicals shall be used in all tests, except that commercial gasoline may be purchased from an ordinary retail outlet. Unless otherwise indicated, it is intended that all reagents conform to the specifications of the Committee on Analytical Reagents for the American Chemical Society where such specifications are available.[1] Other grades may be used, provided it is first ascertained that the reagent is of sufficiently high purity to permit its use without lessening the accuracy of determination.

8.2 *Purity of Water*—Unless otherwise indicated, references to water shall be understood to mean drinking water or other relatively pure water with an electrical conductivity (Method D 1125) of at least 50 μmhos/cm.

8.3 *Commercial Gasoline*—Commercial gasoline test product shall be unleaded regular or premium gasoline that is purchased at a retail outlet. The gasoline shall contain less than 2% water-miscible substances. *(Danger—Gasoline is extremely flammable. Vapors are harmful if inhaled. See*

[1]"Reagent Chemicals, American Chemical Society Specifications," Am. Chemical Soc., Washington, D.C. For suggestions on the testing of reagents not listed by the American Chemicals Society, see "Reagent Chemicals and Standards," by Joseph Rosin, D. Van Nostrand Co., In., New York, NY, and the "United States Pharmacopeia."

Annex A1.1. Leaded gasoline should not be used because there are significant additional hazards associated with its handling and disposal.)

8.4 *Synthetic Gasoline*--Synthetic gasoline, as used in this method, is a 12-component mixture that is roughly representative of automotive gasoline prepared according to Method X 0004. *(Danger--Synthetic gasoline is extremely flammable. Vapors are harmful if inhaled. See Annex A1.2.)*

8.5 *Other Test Products*--This test method can also be used with other non-viscous, water-immiscible liquids. The method, however, does not directly address use of liquids other than commercial gasoline and the synthetic gasoline described herein. The suitability of this method with regard to other substances should be ascertained before this method is used with those liquids.

9. Calibration and Standardization

9.1 *Chart Recorder or Other Data Recording System*--If used, a chart recorder or other data recording system should be calibrated along with the detector. The data recording system should be calibrated according to instructions from its manufacturer and the detector manufacturer. Also, any recording device should be compatible with the detector being investigated. Consult specifications from the manufacturers of the recording device and the detector.

9.2 *Detector*--Because of wide design variability among different petroleum detectors, it is impossible to give complete calibration instructions for all possible detector designs. Calibrate all detectors according to manufacturer instructions.

9.3 *Probe Cross-Sectional Area*--Estimate the area of the cross-section of the probe that will be parallel to and at the same level as test product.

9.3.1 The area of cylindrical or similarly shaped, many-sided polygonal probe cross-sections should be measured by wrapping a thin string around the detector cross-section that is parallel to and at the level of test product. Fit one loop of string tightly around the detector, and cut or mark the string where it begins to overlap itself. The length of one loop of string around the detector is the perimeter. Derive the detector radius from the following equation:

$$\text{Radius, cm} = p/(2 \times 3.1416) \qquad (1)$$

where:

p = length of perimeter, cm.

The following formula should be used to calculate the area of a round cross-section:

$$\text{Cross-sectional area, cm}^2 = 3.1416 \times r^2 \qquad (2)$$

where:

r = radius of the cross-section, cm.

9.3.2 Alternatively, the probe diameter can be measured with calipers. The radius, which is half the diameter, can then be used to calculate the cross-sectional area by Equation 2.

9.3.3 Determine the area of rectangular cross-sections by measuring the length and width of the detector cross-section that is parallel to and at the level of test product. Calculate the cross-sectional area using the following equation:

$$\text{Cross-sectional area, cm}^2 = l \times w \qquad (3)$$

where:

l = length, cm; and

w = width, cm.

9.3.4 For detectors that have more than one part that will displace test product, calculate the cross-sectional area for each part. The total area for the probe is the sum of cross-sectional areas for individual parts.

9.3.5 For irregularly shaped probes, determine the cross-sectional area by immersing the probe in water. Make two marks part-way up one side of a transparent container that will contain the detector probe. The marks should be 1.27 cm apart, and the container should have vertical walls in the region where the marks are made. Add water to the lower mark. Using a buret, determine the volume of water required to reach the upper mark to the nearest 0.1 mL. Empty the container, and suspend the detector probe inside the container. The region of the probe that will contact test product should be centered between the container marks. Again, fill the container to the lower mark with water and determine the volume of water to reach the upper mark. Calculate the probe cross-sectional area using the following equation:

$$\text{Probe area, cm}^2 = (V_i - V_p)/1.27 \qquad (4)$$

where:

V_i = Volume between marks without probe, mL;

V_p = Volume between marks with probe, mL; and

1.27 = height of column of water displaced, cm.

9.4 *Thermocouple*—Perform side-by-side multipoint calibrations for each thermocouple used in the test procedure in a 1-L glass beaker filled with water. The reference thermometer should be an ASTM solvents distillation thermometer having a range from -2°C to 52°C and conforming to the requirements for Thermometer 37C as prescribed in Specification E 1. The levels tested are low (room temperature - 10°C), room temperature, and high (room temperature + 10°C).

9.4.1 Insert both the thermocouple and reference thermometer into the beaker of water and add small quantities of ice. Allow the ice to melt and the temperature to stabilize. Continue adding ice until a steady-state reading (±0.5°C over two minutes) of room temperature - 10°C (±2°C) occurs.

9.4.2 Repeat this procedure using room temperature water (15°C to 30°C), and room temperature + 10°C (±2°C) water. If the temperature difference is more than 1°C, either repeat the test with the same thermocouple or replace the thermocouple and repeat the test until it is acceptable.

9.4.3 Perform thermocouple calibration at the onset of testing and at least once a year.

9.5 *Test Container Area*--Accurately measure the inside diameter of the test container to 0.1 mm or finer. Calculate the container cross-sectional area with the following formula:

$$\text{Area, cm}^2 = 0.785 \times d_c^2 \qquad (5)$$

where:

d_c = test container inside diameter, cm.

10. Procedure

10.1 *Test Series*--Quantitative detectors shall be tested seven times for each test product. Qualitative detectors shall be tested a total of twelve tests for each liquid, six tests at both the LDL and LDL- thicknesses. If a qualitative detector fails to respond positively to one or more of the six LDL tests, then the LDL thickness shall be increased and six more tests shall be performed at the new LDL thickness. Similarly, if a detector responds positively six times to the LDL thickness and one or more times to the LDL- thickness, the LDL- thickness shall be decreased and six more tests shall be performed at the new LDL- thickness.

Note 2—Do not reuse product-soluble components that have been exposed to product. Instead, replace these components.

10.1.1 Perform tests in a random order such that variables of test product and hydrocarbon layer thickness are isolated.

10.2 Add an appropriate volume of water to the container. The volume of water added must allow the detector probe to be fully functional. If the probe operational characteristics do not place limitations on the water volume, then add 2 L of water to the container. The water should be within 2°C of room temperature, which should be between 15°C and 28°C.

10.3 Place the cover on the container and connect the steel braided cable between the cover and the container.

10.4 Mount the probe in the test container so that it is fully functional and forms a tight seal with the cover. The manufacturer's specifications should give details on the placement of the detector in a well with regard to the bottom of the well and in relation to the depth of water in the well. Place the detector in the test container as if the test container were a well.

10.5 Electrically connect the test container to an earth ground to dissipate static electricity.

10.6 Connect the detector output to a chart recorder or other data acquisition system if one is being used. All connections should be in compliance with specifications from the manufacturers of the detector and the data recording system.

10.7 Calibrate the detector if necessary. Many detectors, such as product-soluble detectors, do not require any calibration. Perform calibrations, if necessary, according to manufacturer recommendations. Calibration may need to occur before mounting in the test container. If a

data recording system is being used, it should be calibrated with the detector. Calibrate the data acquisition system according to manufacturer instructions.

10.8 *Blank Test*—Perform a blank test by monitoring the detector output for 30 minutes while the probe is in water.

10.8.1 For quantitative detectors, record the stable output level from the detector at the end of the 30-minute period. If the detector output is not stable after 30 minutes, wait until the output becomes stable. Record the stable output level.

10.8.2 If a qualitative detector goes to an activated state during the blank test, correct the detector malfunction or replace it with a properly operating detector.

10.9 Determine the amount of product to add to the water. It is important to accurately calculate the amount of product that is needed to form a product layer. Calculate the volume of product to add to the test container with the following equation:

$$\text{Volume, mL} = t \times (a_c - a_d) \qquad (6)$$

where:

t = desired product thickness in cm;

a_c = test container cross-sectional area in cm^2; and

a_d = estimated detector cross-sectional area in cm^2.

10.10 Remove the container cover with the attached detector probe from the container, and add the appropriate volume of test product with a glass buret. Pour the test product without splashing or contacting the container walls.

10.11 Cover the top of the test container immediately to reduce test product evaporation and to reduce ambient vibrations from air currents.

10.12 *Data Recording*--Begin monitoring the detector response immediately after replacing the probe and cover. Do not stir or otherwise disturb the contents of the test container. The detector output may be recorded by hand, with a chart recorder, or with another type of electronic data acquisition system. The nature of response monitoring is dependent on whether the device signal is quantitative or qualitative.

10.12.1 For quantitative detectors, monitor the output signal at least until the signal becomes stable or 24 hours elapses, whichever is shorter. Record the detector output at the end of the test period.

10.12.2 For qualitative detectors, monitor the detector output at least until it activates or 24 hours elapses, whichever is shorter. Record the detector output state (activated or not activated) at the end of the test period.

11. Calculations

11.1 *Critical Level for Quantitative Detectors*--Calculate the critical level for quantitative detectors as follows:

$$\text{Critical level, cm} = K \times s + B \tag{7}$$

where:

K = tolerance limit statistic (from Table 1);

s = standard deviation (n-1 degrees of freedom) of the data set, cm; and

B = absolute bias = $|V_o - V_r|$, cm;

where:

V_r = the reference (theoretical) value, cm; and

V_o = average observed value = $1/n \sum_{i=1}^{n} V_i$, cm;

where:

V_i = individual response to a test liquid thickness or concentration, cm;

11.2 *Lower Detection Limit for Quantitative Detectors*--Calculate the lower detection limit for quantitative detectors as follows:

$$\text{Lower detection limit, cm} = B + 2 \times (K \times s) \quad (8)$$

where:

B = absolute bias, cm; and

K = tolerance limit statistic (from Table 1); and

s = standard deviation (n-1 degrees of freedom) of the data set, cm.

12. Interpretation of Results

12.1 *Lower Detection Limit for Qualitative Detectors*--The lower detection limit for qualitative detectors is between the LDL and LDL- thicknesses. For detectors that respond at least one time to a test thickness of 0.01 cm, the LDL- thickness is less than 0.01 cm (< 0.01 cm). For detectors that fail to respond at 1.27 cm, the LDL thickness is greater than 1.27 cm (> 1.27 cm).

13. Report

13.1 Report the following information:

13.1.1 *Detector type*--Report whether the detector was a quantitative or qualitative type.

13.1.2 *Lower Detection Limit*--Report the lower detection limit. For qualitative detectors, report the LDL and LDL- thicknesses.

14. Precision and Bias

14.1 *Precision*—The precision of the procedure in Test Method X 0005 for measuring lower detection limit for liquid-phase out-of-tank petroleum detectors is being determined.

14.2 *Bias*—Since there is no accepted reference material suitable for determining the bias for the procedure in Test Method X 0005 for measuring lower detection limit for liquid-phase out-of-tank petroleum detectors, no statement on bias is being made.

Table 1. One-Sided Tolerance Limit Factors for a Five-Percent Beta Error at a Ninety-Five-Percent Confidence Level[A]

Number of Tests (n)	Tolerance Limit Factor (K)
3	7.655
4	5.145
5	4.202
6	3.707
7	3.399
8	3.188
9	3.031
10	2.911
11	2.815
12	2.736
13	2.670
14	2.614
15	2.566
16	2.523
17	2.486
18	2.453
19	2.423
20	2.396
21	2.371
22	2.350
23	2.329
24	2.309
25	2.292
30	2.220
35	2.166
40	2.126
45	2.092
50	2.065

[A]Taken from Natrella, M.G., Experimental Statistics. National Bureau of Standards Handbook 91. United States Department of Standards. Stock Number 003-003-00135-0. August, 1963. Reprinted October, 1966.

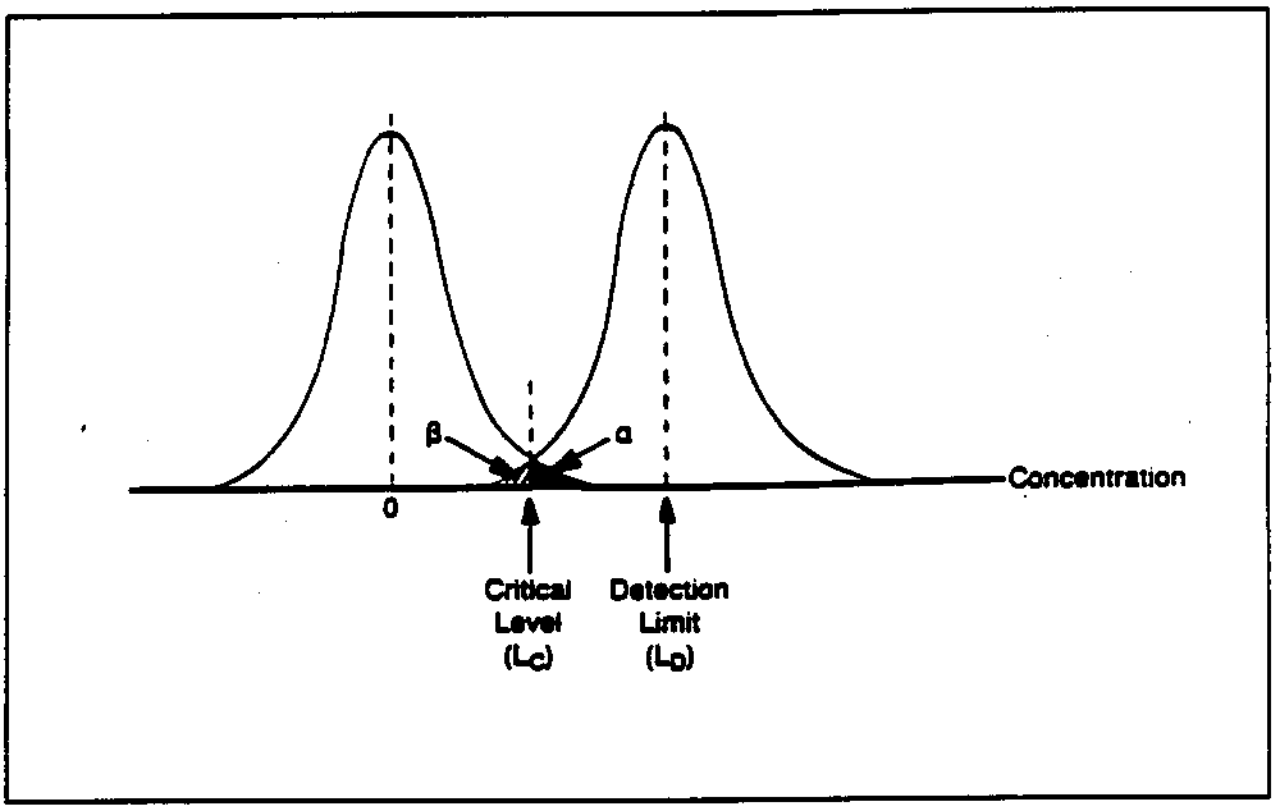

FIG. 1. Graphical Representation of Detection Limit and Critical Level

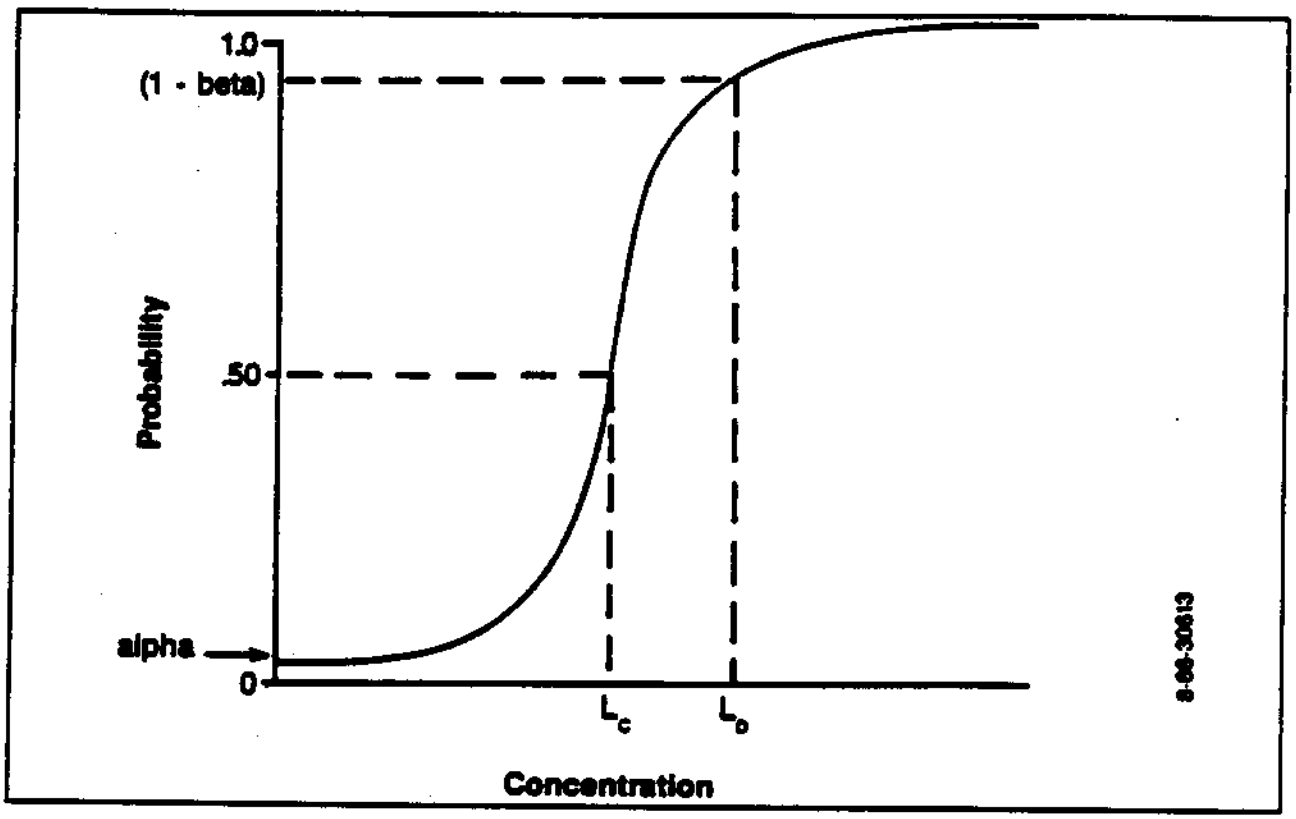

FIG. 2. Probability of Detection Versus Concentration

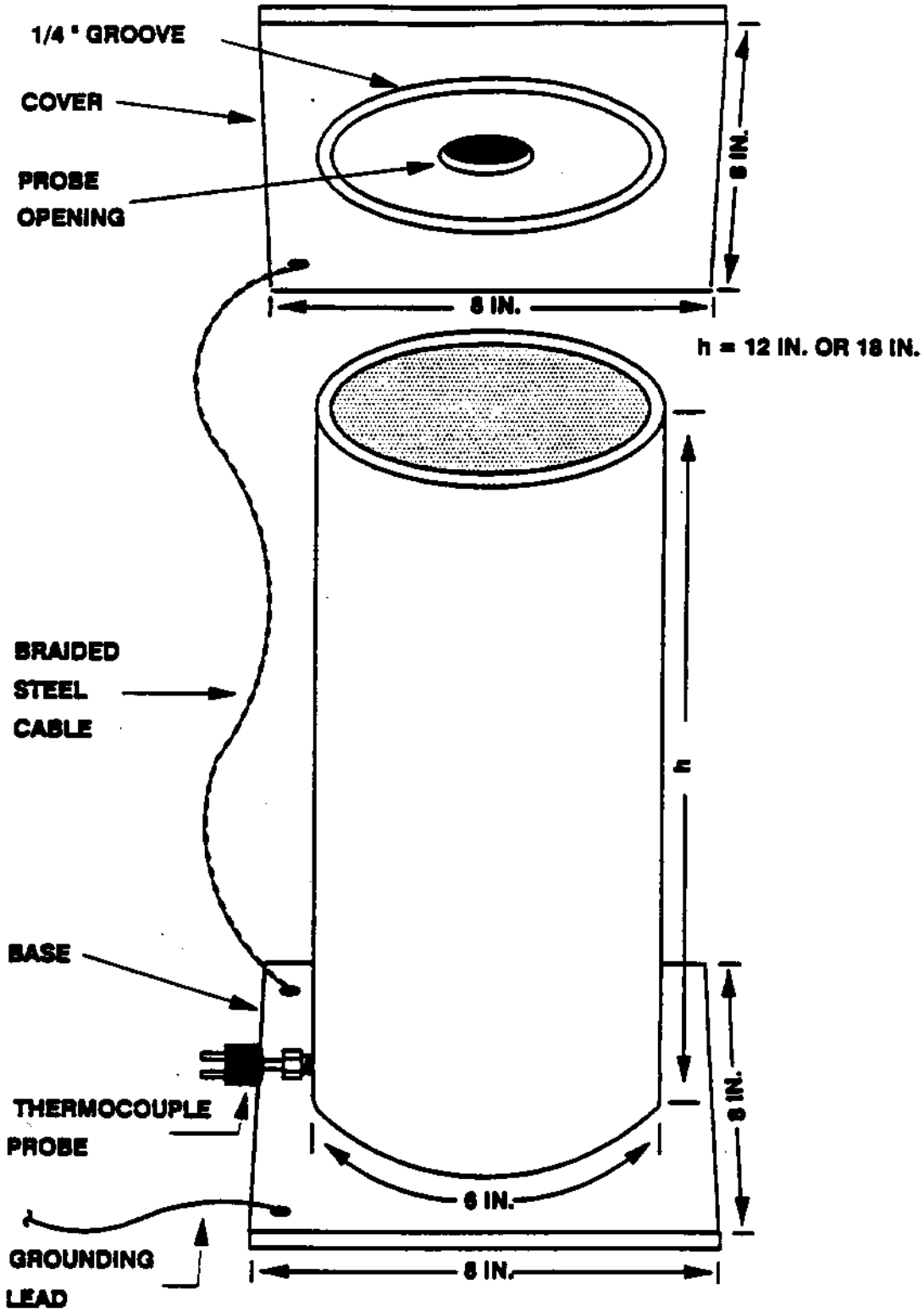

FIG 1. Test Container and Cover

ANNEX

(Mandatory Information)

A1.1 Gasoline (including Leaded Gasoline)

Danger--Extremely flammable. Vapors harmful if inhaled.

Vapors may cause flash fire.

Contains toxic lead antiknock components. Harmful if absorbed through skin.

Keep away from heat, sparks, and open flames.

Keep container closed.

Use with adequate ventilation. Avoid buildup of vapors and eliminate all sources of ignition especially nonexplosion-proof electrical apparatus and heaters.

Avoid prolonged breathing of vapor or spray mist. Avoid prolonged or repeated skin contact.

A1.2 Synthetic Gasoline Mixture

Danger--Extremely flammable. Vapors harmful if inhaled. Vapors may cause flash fire. Contains toxic benzene and other hydrocarbon substances. (See Method X 0000).

Harmful if absorbed through skin.

Keep away from heat, sparks, and open flames.

Keep container closed. Use with adequate ventilation.

Avoid buildup of vapors and eliminate all sources of ignition, especially nonexplosion-proof electric apparatus and heaters.

Avoid prolonged breathing of vapors or spray mist.

Avoid prolonged or repeated skin contact.

Designation: X 0004

Standard Practice for

PREPARATION OF SYNTHETIC GASOLINE FOR TESTING OUT-OF-TANK PETROLEUM DETECTORS

1. Scope

1.1 This practice covers preparation of a standard hydrocarbon mixture to be used for testing out-of-tank petroleum detectors. The mixture is intended to approximate commercially available automotive gasoline.

1.2 *This standard may involve hazardous materials, operations, and equipment. This standard does not purport to address all of the safety problems associated with its use. It is the responsibility of the user of this standard to establish appropriate safety and health practices and determine the applicability of regulatory limitations prior to use.*

2. Summary of Test Method

2.1 An eleven-component mixture consisting of chemicals representing classes of chemicals found in automotive gasoline is mixed in standard proportions.

3. Significance and Use

3.1 The synthetic gasoline mixture is used as a standard for determining the performance of out-of-tank petroleum detectors. This mixture is provided because commercial gasoline compositions vary geographically, seasonally, and by manufacturer.

4. Interferences

4.1 Conditions that can cause interferences with this method include temperature changes, high temperatures, and evaporation. To avoid these conditions, preparations should be conducted at constant (±3°C), normal laboratory temperatures. Evaporation can be reduced by keeping storage containers sealed.

5. Apparatus

5.1 *General Glassware*--A range of glass graduated cylinders and one 2-L glass beaker are needed for mixing the liquid. A 1-L or larger sealable glass bottle is also needed for storing the mixture.

6. Reagents and Materials

6.1 *Purity of Reagents*--Reagent grade chemicals shall be used in all tests. Unless otherwise indicated, it is intended that all reagents conform to the specifications of the Committee on Analytical Reagents for the American Chemical Society where such specifications are available.[1] Other grades may be used, provided it is first ascertained that the reagent is of sufficiently high purity to permit its use without lessening the accuracy of determination.

---

[1]"Reagent Chemicals, American Chemical Society Specifications," Am. Chemical Soc., Washington, D.C. For suggestions on the testing of reagents not listed by the American Chemicals Society, see "Reagent Chemicals and Standards," by Joseph Rosin, D. Van Nostrand Co., In., New York, NY, and the "United States Pharmacopeia."

6.2 *Benzene* (Danger--*Poison. Carcinogen. Harmful or fatal if swallowed. Extremely flammable. Vapors may cause flash fires. See Annex A1.1.*)

6.3 *Cyclohexane* (Danger--*Extremely flammable. Vapors may cause flash fires. Vapor harmful. See Annex A1.2.*)

6.4 *N-Hexane* (Danger--*Extremely flammable. Vapors may cause flash fires. Vapor harmful. See Annex A1.3.*)

6.5 *2-Methylbutane* (Danger--*Extremely flammable. Vapors may cause flash fires. Vapor harmful. See Annex A1.4.*)

6.6 *2-Methyl-2-butene* (Danger--*Extremely flammable. Vapors may cause flash fires. Vapor harmful. See Annex A1.5.*)

6.7 *N-Octane* (Danger--*Extremely flammable. Vapors may cause flash fires. Vapor harmful. See Annex A1.6.*)

6.8 *N-Pentane* (Danger--*Extremely flammable. Vapors may cause flash fires. See Annex A1.7.*)

6.9 *Toluene* (Warning--*Flammable. Vapor harmful. See Annex A1.8.*)

6.10 *1,2,4-Trimethylbenzene* (Warning--*Flammable. Vapor harmful. See Annex A1.9.*)

6.11 *2,2,4-Trimethylpentane* (Danger--*Extremely flammable. Vapors may cause flash fires. See Annex A1.10.*)

6.12 *Xylene(s)* (Warning--*Flammable. Vapor harmful. See Annex A1.11.*)

7. Procedure

7.1 Prepare 1-L of synthetic gasoline by mixing the identified volumes of hydrocarbon liquids listed in Table 1 in a glass container. The mixture should be prepared using glass graduated cylinders or burets, and the

resulting mixture should be stored in a tightly sealed container as soon after preparation as possible to avoid loss of volatile components.

TABLE 1. Synthetic Gasoline Component Proportions and Volumes

Component	Proportion, wt. %	Volume Per Liter, mL
2-methylbutane	10	119
n-pentane	10	118
n-hexane	5	56
2-methyl-2-butene	5	56
2,2,4-trimethylpentane	5	52
n-octane	20	211
cyclohexane	5	48
toluene	20	171
1,2,4-trimethylbenzene	8	68
benzene	2	17
xylene(s)	10	84

ANNEX

(Mandatory Information)

A1.1 Benzene

Danger—Poison, Carcinogen. Harmful or fatal if swallowed. Extremely flammable. Vapors may cause flash fire. Vapor harmful, may be absorbed through skin.

Keep away from heat, sparks, and open flames.

Keep container closed.

Use with adequate ventilation.

Use fume hood whenever possible.

Avoid buildup of vapors and eliminate all sources of ignition especially nonexplosion-proof electrical apparatus and heaters.

Avoid prolonged breathing of vapor or spray mist.

Avoid contact with skin and eyes.

Do not take internally.

A1.2 Cyclohexane

Danger—Extremely flammable.

Harmful if inhaled. Vapors may cause flash fire.

Keep away from heat, sparks, and open flames.

Keep container closed.

Use with adequate ventilation.

Use fume hood whenever possible.

Avoid buildup of vapors and eliminate all sources of ignition especially nonexplosion-proof electrical apparatus and heaters.

Avoid prolonged breathing of vapor or spray mist.

Avoid prolonged or repeated skin contact.

Do not take internally.

A1.3 n-Hexane

Danger—Extremely flammable.

Harmful if inhaled. Vapors may cause flash fire.

Keep away from heat, sparks, and open flames.

Keep container closed.

Use with adequate ventilation.

Use fume hood whenever possible.

Avoid buildup of vapors and eliminate all sources of ignition especially nonexplosion-proof electrical apparatus and heaters.

Avoid prolonged breathing of vapor or spray mist.

Avoid prolonged or repeated skin contact.

Do not take internally.

A1.4 2-Methylbutane

Danger—Extremely flammable.

Harmful if inhaled. Vapors may cause flash fire.

Keep away from heat, sparks, and open flames.

Keep container closed.

Use with adequate ventilation.

Use fume hood whenever possible.

Avoid buildup of vapors and eliminate all sources of ignition especially nonexplosion-proof electrical apparatus and heaters.

Avoid prolonged breathing of vapor or spray mist.

Avoid prolonged or repeated skin contact.

Do not take internally.

A1.5 2-Methyl-2-butene

Danger--Extremely flammable.

Harmful if inhaled. Vapors may cause flash fire.

Keep away from heat, sparks, and open flames.

Keep container closed.

Use with adequate ventilation.

Use fume hood whenever possible.

Avoid buildup of vapors and eliminate all sources of ignition especially nonexplosion-proof electrical apparatus and heaters.

Avoid prolonged breathing of vapor or spray mist.

Avoid prolonged or repeated skin contact.

Do not take internally.

A1.6 n-Octane

Danger--Extremely flammable.

Harmful if inhaled. Vapors may cause flash fire.

Keep away from heat, sparks, and open flames.

Keep container closed.

Use with adequate ventilation.

Use fume hood whenever possible.

Avoid buildup of vapors and eliminate all sources of ignition especially nonexplosion-proof electrical apparatus and heaters.

Avoid prolonged breathing of vapor or spray mist.

Avoid prolonged or repeated skin contact.

Do not take internally.

A1.7 n-Pentane

Danger--Extremely flammable.

Harmful if inhaled.-- Vapors may cause flash-fire.

Keep away from heat, sparks, and open flames.

Keep container closed.

Use with adequate ventilation.

Use fume hood whenever possible.

Avoid buildup of vapors and eliminate all sources of ignition especially nonexplosion-proof electrical apparatus and heaters.

Avoid prolonged breathing of vapor or spray mist.

Avoid prolonged or repeated skin contact.

Do not take internally.

A1.8 Toluene

Warning--Flammable. Vapor harmful.

Keep away from heat, sparks, and open flame.

Keep container closed.

Use with adequate ventilation.

Avoid breathing of vapor or spray mist.

Avoid prolonged or repeated contact with skin.

A1.9 1,2,4-Trimethylbenzene

Warning--Flammable. Vapor harmful.

Keep away from heat, sparks, and open flame.

Keep container closed.

Use with adequate ventilation.

Avoid breathing of vapor or spray mist.

Avoid prolonged or repeated contact with skin.

A1.10 2,2,4-Trimethylpentane

Danger--Extremely flammable.

Harmful if inhaled. Vapors may cause flash fire.

Keep away from heat, sparks, and open flames.

Keep container closed.

Use with adequate ventilation.

Use fume hood whenever possible.

Avoid buildup of vapors and eliminate all sources of ignition especially nonexplosion-proof electrical apparatus and heaters.

Avoid prolonged breathing of vapor or spray mist.

Avoid prolonged or repeated skin contact.

Do not take internally.

A1.11 Xylene(s)

Warning--Flammable. Vapor harmful.

Keep away from heat, sparks, and open flame.

Keep container closed.

Use with adequate ventilation.

Avoid breathing of vapor or spray mist.

Avoid prolonged or repeated contact with skin.

Results of U.S. EPA Standard Evaluation

Liquid-Phase Out-of-Tank Product Detectors

This form documents the performance of the liquid-phase product detector described below. The evaluation was conducted by the equipment manufacturer or a consultant to the manufacturer according to the U.S. EPA's "Standard Test Procedure for Evaluating Leak Detection Methods: Liquid-Phase Out-of-Tank Product Detectors."

Tank owners using this leak detection system should keep this form on file to prove compliance with the federal regulations. Tank owners should check with state and local agencies to verify that this form satisfies their requirements.

Method Description

Name _____

Version _____

Vendor _____

_____
(street address)

_____
(city) (state) (zip) (phone)

Detector output type: ☐ Quantitative ☐ Qualitative

Detector operating principle: ☐ Electrical Conductivity ☐ Thermal Conductivity
☐ Interface Probe ☐ Product Permeable ☐ Product Soluble ☐ Other _____

_____

Detector sampling frequency: ☐ Intermittent ☐ Continuous

Evaluation Results

The detector above was tested for its ability to detect a layer of liquid floating on water. The following parameters were determined:

Accuracy - How closely the product thickness, as measured by the detector, agrees with the actual thickness.

Bias - Whether the method consistently over-estimates or under-estimates product thickness. Not applicable to qualitative detectors.

Precision - Agreement between multiple measurements of the same product thickness. Not applicable to qualitative detectors.

Detection Time - Amount of time the detector must be exposed to product before it responds.

Fall Time - Amount of time that passes before the detector returns to its baseline reading after the product is removed.

Lower Detection Limit - The smallest product thickness that the detector can reliably detect. To meet **federal** performance standards, this must be less than 0.32 cm (1/8 inch).

Specificity - Indicates the accuracy of the detector in sensing several different liquids.

Liquid-Phase Product Detector_____
Version_____

Evaluation Results (continued)

> **Compiled Test Results** (for tests conducted with 0.32 cm of floating product)

Test	Commercial Gasoline	Synthetic Gasoline
Accuracy (%)	_____	_____
Bias* (%)	_____	_____
Precision* (%)	_____	_____
Detection Time (hh:mm:ss)	_____	_____
Fall Time (hh:mm:ss)	_____	_____
Lower Detection Limit (cm)	_____	_____

* Not applicable to qualitative detectors.

> **Specificity Results (%)**

Commercial gasoline	_____
Synthetic gasoline	_____
Diesel fuel	_____
Jet-A jet fuel	_____
n-Hexane	_____
Toluene	_____
Xylene(s)	_____

> **Safety disclaimer: This test procedure only addresses the issue of the method's ability to detect leaks. It does not test the equipment for safety hazards.**

Certification of Results

I certify that the liquid-phase product detector was operated according to the vendor's instructions and that the evaluation was performed according to the standard EPA test procedure for liquid-phase out-of-tank product detectors except as noted on any attached sheets. I also certify that the results presented above are those obtained during the evaluation.

_____ (printed name)	_____ (organization performing evaluation)
_____ (signature)	_____ (city, state, zip)
_____ (date)	_____ (phone number)