PMP CORPORATION

Manual Number: **01-xx-xx**
Revision : **1.2**
Date: **10/22/2019**

Installation Instructions

New PMP Steel Tank Interstitial Sensor

PMP # 63420 & 63460

Replaces Veeder-Root #794390-420 & -460

Contents

Disclaimer 0
Related Manuals 0
Safety Symbols 1
BEFORE YOU BEGIN 2
SAFETY PRECAUTIONS FOR INSTALLATION AND MAINTENANCE 2
Description 2
Sensor Models 2
In the box 3
Installation Prep 3
Installation of the Sensor 3
Complete the installation 4
Functional / Maintenance Test Procedure 5
Quick Reference 6
- Installation and Operation manuals 6
- Equipment Check Guidelines 6
- Equipment Calibration 6
- Maintenance Procedures 6
- Test Results/Reports 6
- Technical Contact 6

Disclaimer

All product or company's names, trade names, trademarks, parts numbers and part descriptions may be the trademarks of their respective owners, and are used for reference or identification purposes only. PMP does not claim any right to or affiliation with such owners. The PMP product described here is remanufactured and sold by PMP and is not the product of any other identified manufacturer.

Related Manuals

This installation requires specific knowledge of Veeder-Root equipment and you may need to refer to the following OEM manuals to complete the installation:

576013-879	TLS-3XX Series Console Site Prep and Installation Manual
577013-879	TLS-4XX Series Console Site Prep and Installation Manual
576013-616	Interstitial Liquid Sensor – Steel Tanks Installation Guide
577013-750	Sensor Product Application Guide
577013-814	Operability Testing Guide

Safety Symbols

The following safety symbols are used to alert you to potential hazards and precautions that should be taken. These symbols are not intended to alert you to all of the potential hazards you could be exposed to while working in a service station environment. These symbols cannot replace common sense and industry practices.

	READ ALL RELATED MANUALS Read and understand all of the written material related to the installation of this product. If you are un-sure of any aspect of this product, contact PMP for clarification
	WARNING Attention. Pay particular attention to the text adjacent to the use of this symbol to alert you to safety or operational issues.
	TURN OFF POWER Remove / disconnect all power before proceeding with this installation.
	ELECTRICITY Potential shock hazard. Test circuit to verify power has been disconnected
	BARRIERS Cordon off work area with barriers to avoid contact with traffic
	EXPLOSIVE Potentially explosive materials and or atmosphere. Take necessary precautions.
	FLAMMABLE Potentially flammable materials and or atmosphere. Take necessary precautions.
	ESD (Electrostatic Discharge) Take necessary precautions to avoid damaging sensitive electronics
	SAFETY Use appropriate safety equipment including equipment that may be mandated by federal, state and local regulations.
	GLOVES Wear gloves during this operation.

BEFORE YOU BEGIN

- **Service station equipment has both electricity and hazardous, flammable and potentially explosive liquid. Failure to follow the precautions below and instructions in this guide may result in serious injury and death. Follow all rules, codes and laws that apply in your area.**
- **Veeder-Root requires training certifications for contractors who install and set up equipment related to the TLS-350. Installers of this product must have a Veeder-Root® certification of Level 2/3. Be sure that you have familiarized yourself with these requirements and determined if you are qualified to perform this installation.**
- **PMP shall not be liable for errors contained herein or for incidental or consequential damages in connection with furnishing, performance or use of this publication.**
- **PMP reserves the right to change product features or the information contained in this publication.**
- **Failure to install this product in accordance with OEM instructions and warnings will result in voiding of all warranties connected with this product and may damage the environment.**

SAFETY PRECAUTIONS FOR INSTALLATION AND MAINTENANCE

- **Only a person with knowledge and experience with service station equipment should perform this work.**
- **Always make sure ALL power to the equipment you are working with is turned OFF before starting any maintenance.**
- **Note that more than one disconnect switch may be required to de-energize the equipment for maintenance and servicing. Use a voltmeter to make sure ALL circuits in the dispenser are de-energized. Failure to do so may result in serious injury.**

Description

PMP Corporation's 63420 and 63460 Steel Tank Interstitial sensors are single-point, non-discriminating sensors. The 63420 and 63460 sensors are identical except the length of wire provided. These sensors are equivalent to Veeder-Root 798480-420 & 794380-460 sensors respectively.

Used in conjunction with a Veeder-Root TLS console, these sensors will detect the presence of fluid in interstitial space of double walled steel tanks. If the liquid level rises above the threshold of either sensor, an alarm is generated and logged in the ATG console so that a historical record of the alarm is recorded. This alarm would indicate there is liquid present where the sensor is installed. After the cause of the alarm has been determined and corrected, the sensor can easily be removed, cleaned and put back into service.

In order for this sensor to operate properly, it is vital that the sensor be installed properly and that the TLS console be programmed correctly.

Sensor Models

PMP Number	OEM Number	Description
63420	793480-420	Steel Tank Interstitial Sensor with 16' cable
63460x	793480-460	Steel Tank Interstitial Sensor with 30' cable

In the box

Qty	Description
1	Steel Tank Interstitial Sensor
1	Installation Instructions
2	Tie-wrap
2	Wire nut – P2 Blue
2	Grommet
2	Cord grip
1	Seal pack

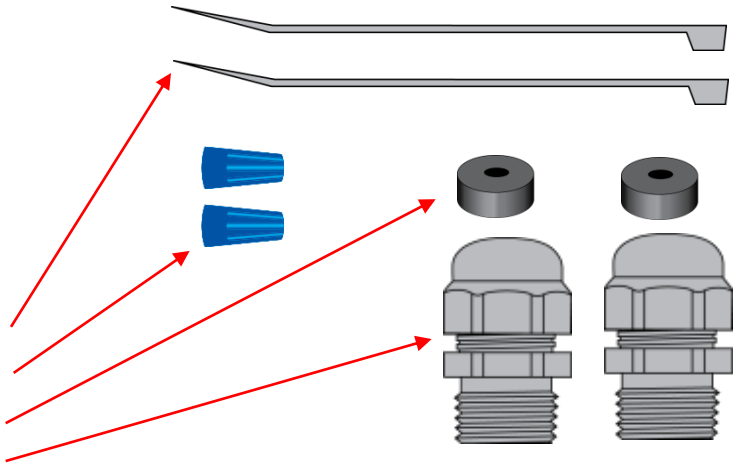

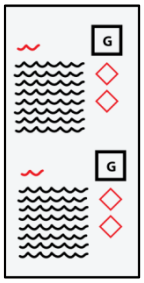

Note:
An additional rubber insert, for the cord grip, has been provided to accommodate smaller gauge wire such as the one used on this sensor.

Depending on your installation, you may need to replace the rubber insert to ensure a water tight connection.

Installation Prep

1. Turn-off power to the system.
2. Block off the work area.
3. Confirm you have the correct sensor for your application.
4. Confirm that there is no liquid in the interstitial space prior to installing the sensor.

Installation of the Sensor

Note: You must refer to the OEM manuals listed earlier in this manual for detailed instructions including console setup.

1. Lower the sensor into the riser. Note that the riser must be a 2” minimum diameter.
2. The sensor must sit flat at the bottom of the riser.
3. Feed the sensor wire through the riser cap and cord grip.
4. Determine the length of wire required**.** Lower the sensor so it rests at the bottom of the interstitial riser. **Do not suspend the sensor from the cable.**
5. Thread the cord grip into the riser.
6. Tighten to ensure a watertight seal.

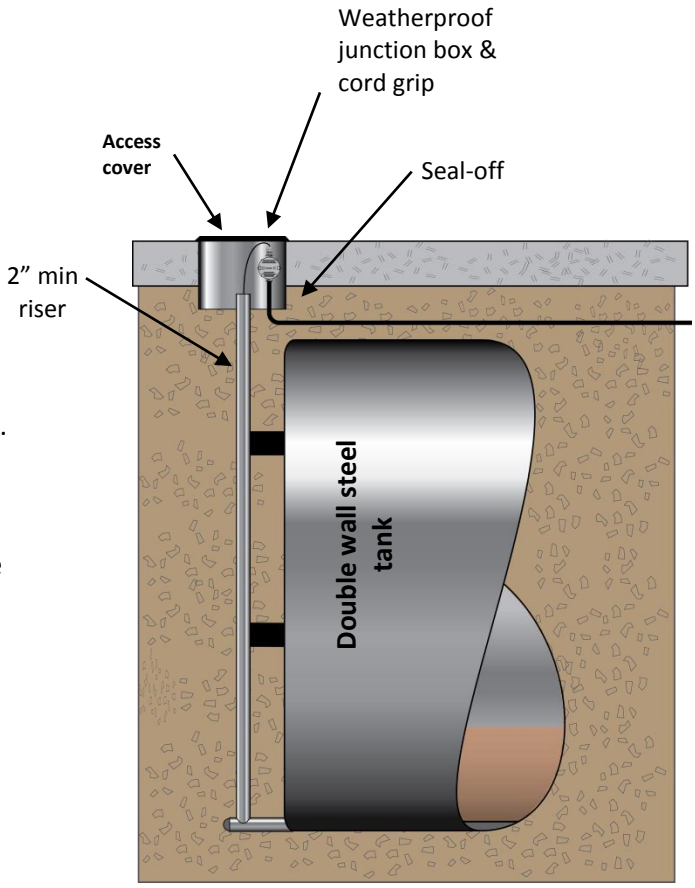

Complete the installation

1. Verify that the sensor has been installed in the proper orientation by using an ohmmeter across the sensor wires. The ohmmeter should read 100k Ω.
2. Feed the sensor cable though the cord grip of the junction box. Thread the cord grip into the junction box.
3. Connect the sensor to the field wiring in accordance with applicable codes and regulatory requirements.
4. Use the seal kit provided to ensure water tight field connections
5. Enclose the wiring and seal kit in the junction box.
6. Re-install the junction box cover.
7. Check to be sure all of the cord grips have been tightened to make them water tight.
8. Restore power to the console and proceed with the TLS setup process.

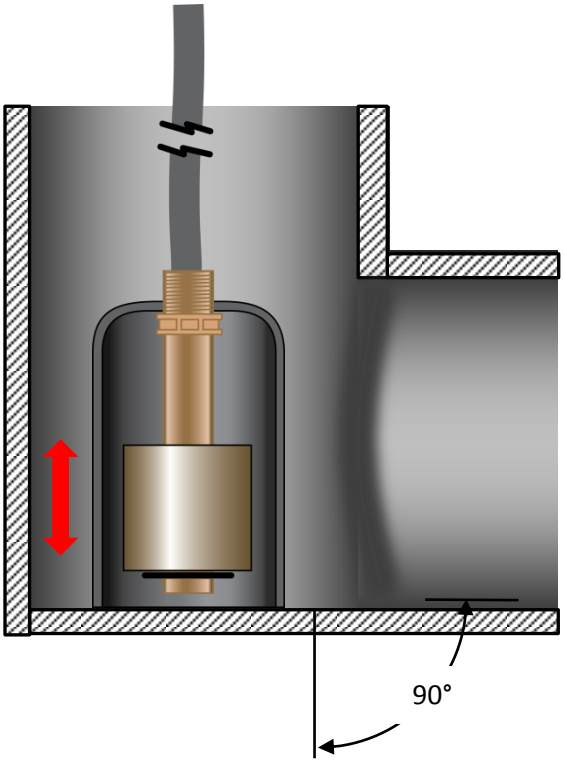

Note: You can confirm the proper sensor operation by using an ohmmeter across the sensor wires and turning the sensor upside-down:
100k Ω = ✓
0 Ω = ✗

How to use the Connector Sealing Kit

1. Carefully cut the bag and remove the seal pack.
2. Remove the two part seal pack.

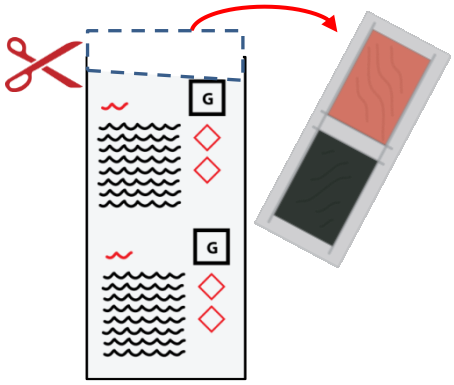

3. Grip the edges of the seal pack at the center and vigorously wiggle the plastic bag to weaken the barrier between the two halves.

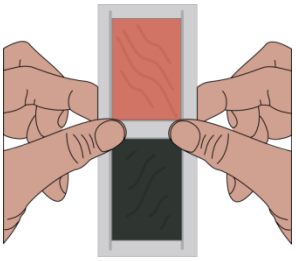

4. Squeeze the resin back and forth 25-30 times to thoroughly mix the two parts.

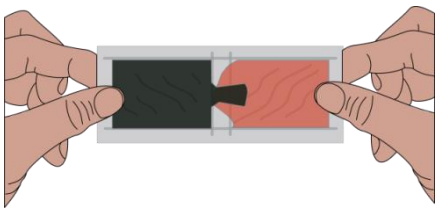

5. Squeeze the mixed resin to one side of the packet and cut off the other side.

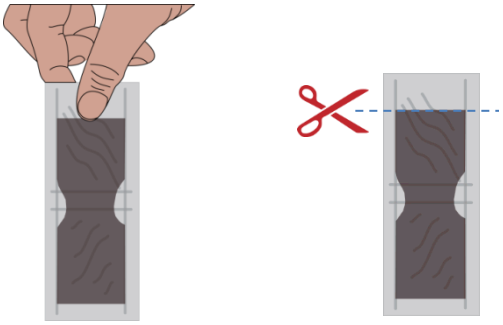

6. Insert the connections made above. **Be sure the connections are inserted to the full depth of the seal pack to ensure a watertight connection.**

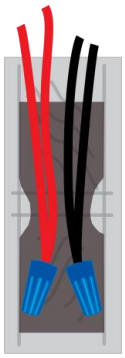

7. Use the wire tie provided to cinch the packet, where shown, to secure the wires in the epoxy pack during the curing process.

   Cure time is approximately 8-12 min @ 73°F.

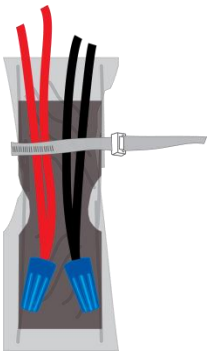

Functional / Maintenance Test Procedure

1. Fill a container with a minimum of 2 inches of water.
2. Remove sensor from tank or sump.
3. Inspect the sensor for any physical damage including cables and connections.
4. Place the sensor in the container, oriented as it would be installed, until it is submerged.
5. The sensor should trigger an alarm on the TLS. Depending on the console and site configuration, it may take up to 5 minutes to trigger an alarm.
6. Clear the alarm on the TLS-350 by pressing the Alarm / Test key or pressing the Alarm button twice on the TLS-450.
7. **If an alarm is not detected, the sensor has failed the test and must be replaced**
8. If the sensor passed the test, allow the sensor to dry and reinstall per the installation instructions.
9. Record the test results for your records.

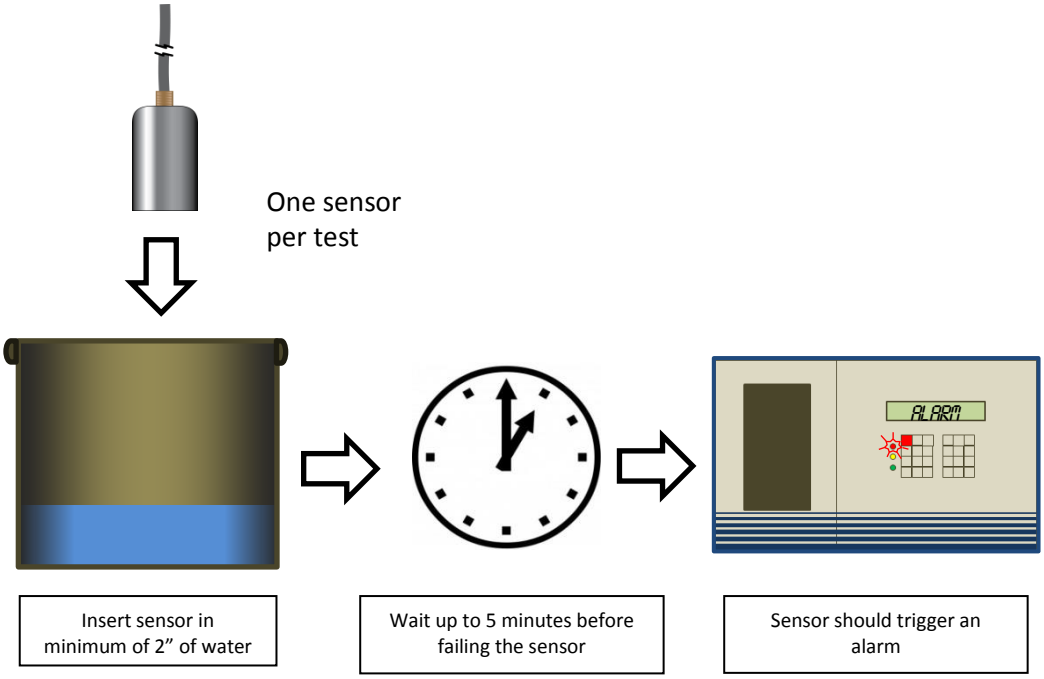

Quick Reference

Installation and Operation manuals

PMP provides an overview of the sensor installation with each sensor shipped. These installation overviews can also be found on the internet at www.pmp-corp.com. Refer to the OEM manuals listed above for detailed installation instructions.

Equipment Check Guidelines

No vendor specific checklist is provided for the equipment used to monitor these sensors. However, the EPA provides a useful checklist for Underground Storage Tank (UST) owners. This checklist is available on the EPA’s website: www.epa.gov/oust/cmplastc/cheklist.pdf

Equipment Calibration

No calibration is required for the sensors discussed in this document.

Maintenance Procedures

Periodic maintenance may be required by local regulations. Operability test guidelines for each sensor can be obtained from PMP or be found on the internet at www.pmp-corp.com. Sensors should be tested at least annually. However, Federal, State or Local regulations may require more frequent inspections and testing.

Test Results/Reports

Third party evaluations were conducted by Ken Wilcox and Associates. Test results can be obtained from PMP.

Technical Contact

Support questions can be directed to the Engineering department at PMP. Refer to the contact information printed at the bottom of this page.

PMP CORPORATION
P.O. Box 422 • 25 Security Drive
Avon, CT 06001
E-mail: sales@pmp-corp.com

Local: 860-677-9656
Toll Free: 800-243-6628
Toll Free Fax: 888-674-0196
Web: www.pmp-corp.com

© PMP CORP.