Department of Environmental Protection

2600 Blair Stone Road ♦ Tallahassee, Florida 32399-2400

DEP Form: 62-762.901(9)
Form Title: Storage Tank Equipment Registration Form
Effective Date: July 2019
Incorporated in Rule 62-762.851, F.A.C.

Storage Tank System Equipment Registration Form

Fill out completely

General Information

Company Name: Morrison Bros. Co.
Contact Name: Jerry Schollmeyer
Company Address: 570 East 7th Street
City, State: Dubuque, Iowa Zip: 52001
E-mail: jschollmeyer@morbros.com
Contact Number: 1.800.553.4840
Product Name: Vertical Tank Level Gauge: Vertical Tank Liquid Level Gauge with Overfill Alarm Relay Output
Model Number(s): 1618 Series, 1619 Series
Product Type: Mechanical Tank Gauge
Rule(s) citation that registration is being requested within Chapter 62-761 (UST), and/or 62-762 (AST), F.A.C.: 62-762 (AST)

Write a brief description of equipment registration request including product limitations:

The 1618 is a mechanical liquid level gauge designed to measure the liquid level in vertical aboveground storage tanks ranging between 30 and 50 feet in height. The liquid level is displayed in feet and inches (metric available) and is viewable at eye level. The model 1619 has the same features as the 1618 but in include a relay output with a simple switch device. When the switch is triggered it sends a signal to a Morrison 918 Alarm. (sold separately)

Information Checklist (Choose Yes, No, or N/A - Not Applicable):

		Yes	No	N/A
1.	Third-party Certification by a Nationally Recognized Testing Laboratory? (Required)	✔		
2.	Documentation of third-party evaluation that the equipment meets DEP Rules?	✔		
3.	Documents included about the qualifications of the Nationally Recognized Testing Laboratory?	✔		
4.	Technical information and drawings included?	✔		
5.	Installation instructions included?	✔		
6.	Annual Operability Testing Requirements (Rules 62-761.500, 62-762.501, & 62-762.502 F.A.C.)?	✔		
7.	Integrity Testing Requirements (Rules 62-761.700, 62-762.701, & 62-762.702, F.A.C.)?	✔		
8.	Compatible with fuel blends containing >10% ethanol or >20% biodiesel?	✔		
9.	Has the product been approved or registered in other countries or states? (If so provide list)		✔	
10.	Any requirements for company-certified installers or trainers?		✔	
11.	Was this product(s) previously approved or registered by the Department? If yes, EQ-_____		✔	
12.	Any changes or modifications to the equipment since the last submittal to DEP?			✔

Document Information: Provide supporting documents indicated as "Yes" above including this form via email to Tanknotify@floridadep.gov, or documents can be sent to FDEP, Division of Waste Management, 2600 Blair Stone Road, MS 4560, Tallahassee, FL 32399.

Write a brief description of equipment installation and performance in the U.S.:

The 1618 & 1619 gauge displays the liquid level reading at eye level. The gauge display is installed using vertically mounted pipe from the base of the tank to the to tank top where two pulley housings facilitate the movement of the gauge wire connecting the float to the gauge. High level set points are integrated into the gauge head to activate a simple switch powered by a lithium battery. When the switch is activated the alarm is activated.

Equipment Registration Certification:

To the best of my knowledge and belief, all information submitted on this form is true, accurate and complete.

Jerry Schollmeyer, Sales Manager
Printed Name and Title

Signature (right click to sign)

07/09/2020
Date

For Department Use Only:

Date Application Received: 07/10/2020
Application complete: Yes: ✔ No: ☐

EQ- 941
Date of complete or incomplete letter sent: 07/10/2020
Date Equipment Requires Renewal: 7/10/2025

Storage tank system equipment requires renewal every 5 years in accordance with subsection 62-762.851(2), F.A.C.

1618 Mechanical Vertical Tank Gauges

SPECIFICATION SHEET

Application

The 1618 mechanical tank gauge is designed for vertical tanks up to 50' in height and provides a readout in feet and inches at ground level.

Features and Details

- 30'+ line of sight viewing distance
- Easy to read from wide viewing angle
- Easy to install with single vertical pipe connection
- Easy to calibrate
- Installs through 2" schedule 40 pipe or 2" tank bung (drop tube float models require a 4" tank opening)
- Vapor is contained from the viewing area to prevent lens fogging
- Mounting options
  - Foot base
  - Tank mount bracket for easy attachment to Uni-Strut Channel or other tank brackets
- **1618M**...metric versions available for vertical tanks up to 9.5 meters (31') in height, providing a readout in centimeters at ground level.

1618

1618M

Materials of Construction

- Body... Cast aluminum
- Gears and gear cogs... Acetal
- Hardware (including captive screws on front cover)... Stainless steel
- Float... Stainless steel
- Cable... Stainless steel
- Pulleys... Cast aluminum
- Spring... 301 stainless steel
- Shaft bushing... Stainless steel
- O-ring... FKM
- Lens cover... Acrylic

Item Number	Description	Float	Length
1618--3000 AG*	Mechanical vertical tank gauge	Standard	0-30'
1618--4000 AG*	Mechanical vertical tank gauge	Standard	0-40'
1618--5000 AG*	Mechanical vertical tank gauge	Standard	0-50'
1618--3010 AG*	Mechanical vertical tank gauge	Drop Tube	0-30'
1618--4010 AG*	Mechanical vertical tank gauge	Drop Tube	0-40'
1618--5010 AG*	Mechanical vertical tank gauge	Drop Tube	0-50'
1618M-9500 AG*	Metric mechanical tank gauge	Standard	9.5M (950 CM)
1618M-9510 AG*	Metric mechanical tank gauge	Drop Tube	9.5M (950 CM)
1618--0167 AB	Tank mount bracket (sold separate)	N/A	N/A

Includes float, pulley assembly, conduit body, base, and gauge.

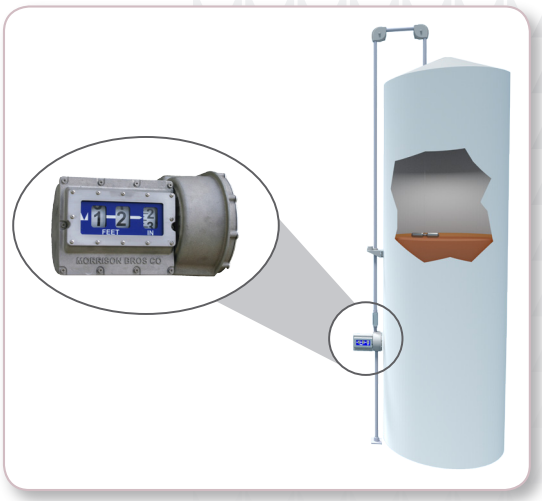

MORRISON BROS. CO.

570 E. 7th Street, P.O. Box 238 | Dubuque, IA 52004-0238
t. 563.583.5701 | 800.553.4840 | f. 563.583.5028
www.morbros.com

1619 Mechanical Vertical Tank Gauge with Level Alarm Relay Output

SPECIFICATION SHEET

Application

Designed for installation on vertical tanks up to 50' in height, the 1619 mechanical vertical tank gauge provides a readout in feet and inches at ground level and includes a single level alarm relay output to activate an external alarm box.

Features and Details

- 30'+ line of sight viewing distance
- Readout in feet and inches
- Easy to read from wide viewing angle
- Easy to install with single vertical pipe connection
- Easy to calibrate
- Installs through 2" schedule 40 pipe or 2" tank bung (drop tube float models require a 4" tank opening)
- Vapor is contained from the viewing area to prevent lens fogging
- Mounting options
  - Foot base
  - Tank mount bracket for easy attachment to Uni-Strut Channel or other tank brackets
- **1619M**...metric versions available, providing readouts in centimeters

Gauge with Relay Output

- Desired alarm level is set within gauge head
- The level alarm relay output wiring from the gauge has to be connected to an external alarm box (sold separately). Options include the 918 series and 918AC series alarm boxes.

Battery Power Module

- Can be installed in any convenient location
- Alarm level setting can be verified
- One 3.6 volt lithium AA replaceable battery
- Anticipated battery life is 4 years
- Low battery light indicator

Alpha Wire 77112 (cable for connecting gauge to Battery Power Module)*

- 5 Conductors
- 22 AWG (7/30 Stranded) tinned copper
- Foil shield with drain wire
- Temperature range: -50 to 150C

**Three feet of wire is included with a 1619 gauge. If the Battery Power Module is installed further than three feet from the gauge, additional wire needs to be purchased.*

Separate wire is required from the gauge to external alarm. See external alarm specifications for wire requirements.

Battery Power Module

1619

Tank Bracket
(sold separately)

Alpha Wire 77112
(required and sold separately)

Alarm Options

(sold separately)

918 Series Alarm Boxes

AND

918AC Series Alarm Boxes

Materials of Construction, Code Compliance, and part numbers on next page.

Materials of Construction

- Body... Cast aluminum
- Gears and gear cogs... Acetal
- Hardware (including captive screws on front cover)... Stainless steel
- Float... Stainless steel
- Cable... Stainless steel
- Pulleys... Cast aluminum
- Spring... 301 stainless steel
- Shaft bushing... Stainless steel
- O-ring... FKM
- Lens cover... Acrylic
- Power module enclosure... polyester fiberglass

Code Compliance

UL/cUL 913

Item Number	Description	Float	Length
1619--3000 AG*	Mechanical vertical tank gauge with alarm relay	Standard	0-30'
1619--4000 AG*	Mechanical vertical tank gauge with alarm relay	Standard	0-40'
1619--5000 AG*	Mechanical vertical tank gauge with alarm relay	Standard	0-50'
1619--3010 AG*	Mechanical vertical tank gauge with alarm relay	Drop Tube	0-30'
1619--4010 AG*	Mechanical vertical tank gauge with alarm relay	Drop Tube	0-40'
1619--5010 AG*	Mechanical vertical tank gauge with alarm relay	Drop Tube	0-50'
1619M-9500 AG*	Metric mechanical vertical tank gauge with alarm relay	Standard	950 CM
1619M-9510 AG*	Metric mechanical vertical tank gauge with alarm relay	Drop Tube	950 CM
1618--0167 AB	Tank mount bracket (sold separate)	N/A	N/A

**Includes float, pulley assembly, conduit body, base, and gauge.*

Alpha Wire 77112 (required cable)

Item Number	Description	Length
1519--0015 CC	Five-conductor shielded cable	15'
1519--0025 CC	Five-conductor shielded cable	25'
1519--0050 CC	Five-conductor shielded cable	50' (spool)
1519--0100 CC	Five-conductor shielded cable	100' (spool)
1519--0200 CC	Five-conductor shielded cable	200' (spool)

570 E. 7th Street, P.O. Box 238 | Dubuque, IA 52004-0238
t. 563.583.5701 | 800.553.4840 | f. 563.583.5028
www.morbros.com

1618/1619 Mechanical Gauge
Installation, Operation, and Maintenance Instructions

The 1618/1619 Mechanical Gauge is designed to be used to measure liquid level in an aboveground storage tank. The gauge mounts to the side of the tank and is activated by a float connected to a cable.

Failure to follow any or all of the warnings and instructions in this document could result in a hazardous liquid spill, which could result in property damage, environmental contamination, fire, explosion, serious injury or death.

NOTE: The most accurate method to calibrate the tank is with fluid in it. This will take into account variables associated with the float position, the mechanism, and the fluid density.

Installation

WARNINGS

- **Fire Hazard –** Death or serious injury could result from spilled liquids.
- Any modification to this gauge other than those stated in these installation instructions will void the product warranty.
- This device is intended to be used as a liquid level indicator to the operator and should not be the only system in place to prevent a tank from overfilling. It is the sole responsibility of the operator to continuously prevent any spillage regardless of the situation or status of the gauge.
- Install in accordance with all applicable local, state and federal laws.
- For your safety, it is important to follow local, state, federal and/or OSHA rules that apply to working inside, above, or around the storage tank and piping area. Use all personal protective equipment required for working in the specific environment.
- Tanks could be under pressure. Vapors could be expelled from tank vents, piping, valves or fittings while performing installation. Vapors could catch fire or cause an explosion. Avoid sparks, open flame, or hot tools when working on gauge.
- Use a dampened cloth when cleaning the clear front cover of the gauge to prevent static buildup and discharge.
- In the event of malfunction, contact Morrison Bros. Customer Service.

Steps

1. Verify contents of box. You should have received the gauge, float, pulley assemblies (2), one base and a small tube of adhesive (See Figure 1). Inspect the items for shipping damage. **DO NOT** use if damage is found. See page 13 for a list of items not supplied.
2. Remove the front cover of gauge and remove foam under cover. **NOTE:** The phillips screws in the front cover are captive fasteners that aren't meant to be removed. The gauge should be reading approximately 11' 1." If not the gauge could be damaged or dysfunctional. Inspect the internals for any damage. **DO NOT** use if damage is found. Find the cable inside the conduit body of the gauge. Slowly pull on cable to ensure gauge is functioning properly. **DO NOT** pull and release cable uncontrollably. This can cause damage to the internal mechanism and render the gauge inoperable. **ALWAYS** hold onto cable and allow it to move in a slow steady motion.
3. Remove the red waring tag.

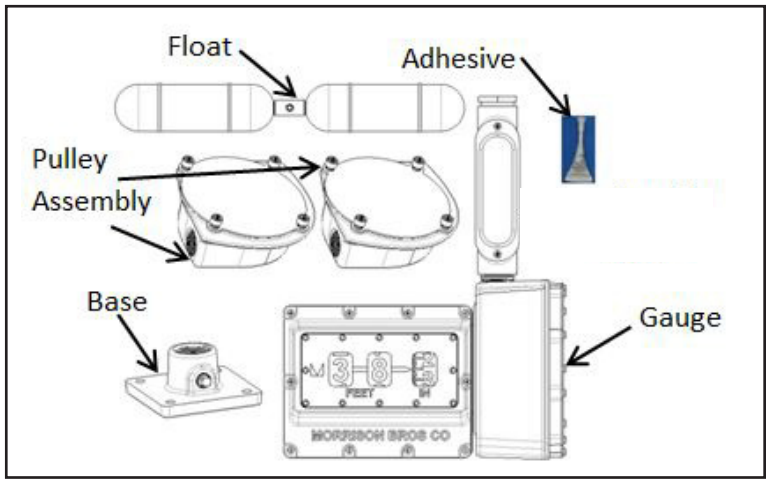

Figure 1

4. If installing a 1619 gauge, refer to page 5 for calibrating alarm set point.
5. The 1618 gauge is to be mounted at eye level using the supplied base (See Figure 2.) Cut pipe "A" to a length that positions gauge at eye level and then thread both ends of pipe, refer to table 1 for pipe thread size, inside diameter of pipe must be free of burrs. Apply PTFE tape to the male threads on both ends of the pipe. **DO NOT use any pipe dope as this may get on the gauge cable and cause a malfunction.** Thread pipe into the based and then thread the gauge onto pipe "A".
6. Positon gauge next to tank in the desired location, see Figure 2. Once the gauge is in position anchor the base, using the holes in the base (See Figure 3) and concrete anchor bolts (not supplied). You can also use an optional tank bracket to anchor the gauge to the side of the tank (See Figure 21.) If you choose this method you will not use the base.

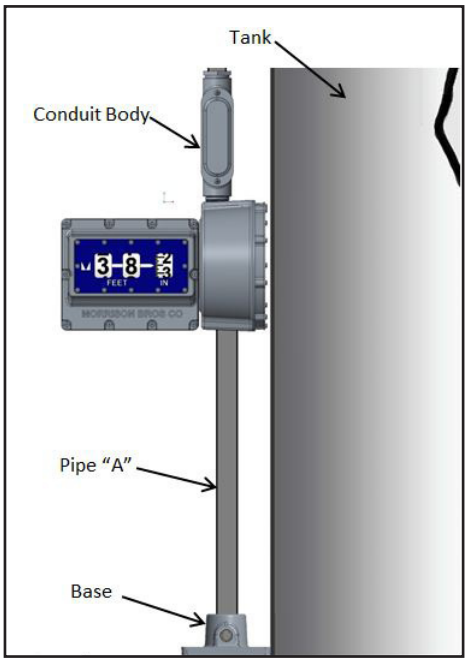

Figure 2

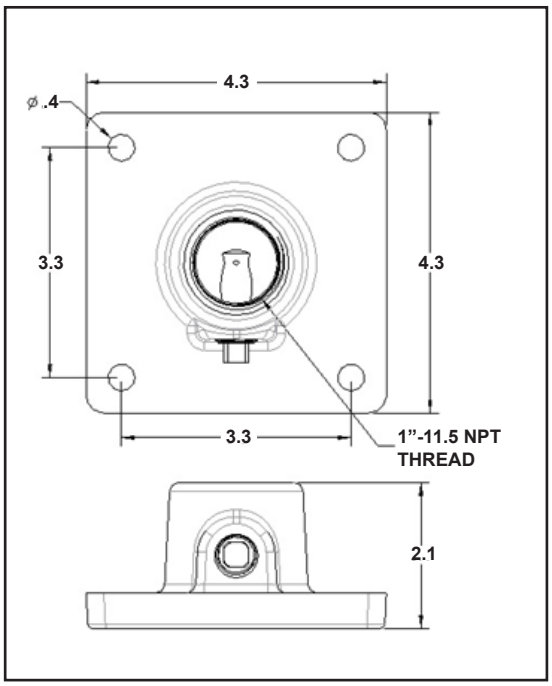

Figure 3

7. Locate the opening on the top of the tank where the gauge is to be installed (minimum opening size is 2" schedule 40 pipe). If possible, select a location away from the fill port to avoid excessive turbulence that could affect the float. Also make certain that there are no objects inside the tank, near the selected opening, upon which the float and cable could get tangled and that the gauge location will not interfere with normal operation of the tank.
NOTE: Once an opening is selected, use a tank stick or gauging tape to determine the current liquid level height in the tank. Record this liquid level as you need it to set the gauge once it is installed.

Pipe	Size
"A"	1" NPT
"B"	¾" NPT
"C"	¾" NPT
"D"	¾" NPT
"E"	¾" NPT

Table 1

7. Thread Pipe “B” onto gauge (before cutting or adding to the desired length pipe “B” is to be used to determine the length of pipe “D.”) Pipe “B” will have to be long enough to be able to measure the center to center distance from Pipe “B” to tank opening. (See Figure 4.)
8. Cut pipe “D” to a length that is 7” less than that value. This pipe is then to be threaded on both ends and should not exceed 7’ in length; inside diameter of pipe must be free of burrs. Apply PTFE tape to the male threads on both ends of the pipe. **DO NOT use any pipe dope as this may get on the gauge cable and cause a malfunction.**
9. Thread a pulley assembly onto each end of pipe “D”, making sure pulley assemblies are aligned with one another (See Figure 4.)
10. Note there are three pipe “C”s, cut all to a length of 4” and thread both ends of pipes; inside diameter of pipe must be free of burrs. Apply PTFE tape to the male threads on both ends of the pipe. **DO NOT use any pipe dope as this may get on the gauge cable and cause a malfunction.**

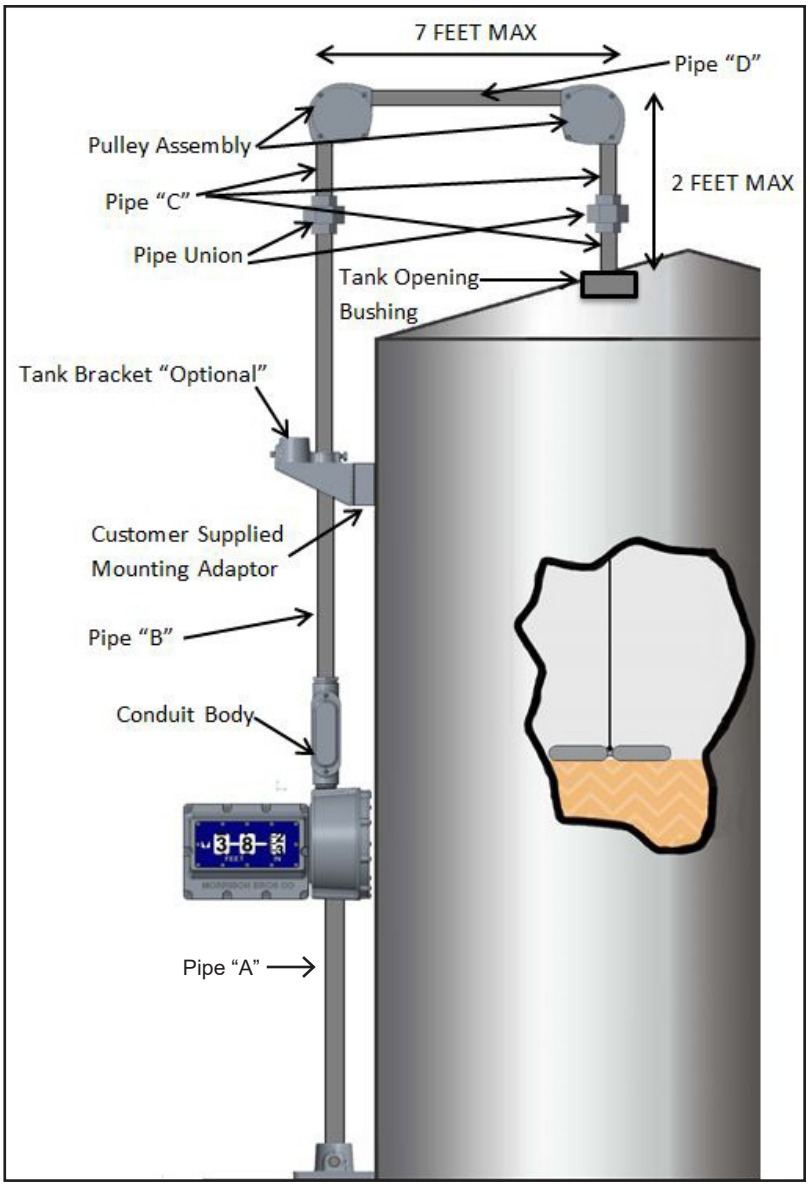

Figure 4

11. Thread two “C” pipes into each of the pulley assemblies. Thread one half of a ¾” pipe union onto one pipe “C”. Thread the other complete ¾” pipe union on to the other Pipe “C.” Leave the pipe union loose. Apply PTFE tape to the male threads on both ends of the pipe. **DO NOT use any pipe dope as this may get on the gauge cable.**
12. Thread the last Pipe “C” onto the full pipe union. Thread tank opening bushing onto Pipe “C.” (See Figure 4.) Apply PTFE tape to the male threads on both ends of the pipe. D**O NOT use any pipe dope as this may get on the gauge cable**
13. Thread pulley assembly into tank opening.
14. Verify assembly is level; once level measure or mark the needed length for Pipe “B.” Cut or add that value to Pipe “B.” Apply PTFE tape to the male threads on both ends of the pipe. **DO NOT use any pipe dope as this may get on the gauge cable and cause a malfunction.**
15. Thread the other half of the ¾” NPT union on top of pipe “B.” Thread pipe “B” into conduit body of gauge. (See Figure 4.)
16. Connect the pipe union from Pipe “B” to the pulley assemblies.
17. Unthread pipe opening bushing and swing entire assembly out of the way of the tank opening.
18. Remove the covers from both pulley assemblies. With the covers off unscrew the bolt located in the center of the housing. Remove the washers and pulleys; be sure not to lose any hardware.

19. With pulleys removed run a fish tape or pull wire through the tank opening bushing, through both pulley housings, and down to the conduit body of gauge. Remove cover of conduit body and connect cable loop onto fish tape/pull wire. Once connected begin to pull up fish tape/pull wire until the end of the gauge cable is through the tank opening bushing. **DO NOT** pull and release the cable uncontrollably. This can cause damage to the internal mechanism and render the gauge inoperable.

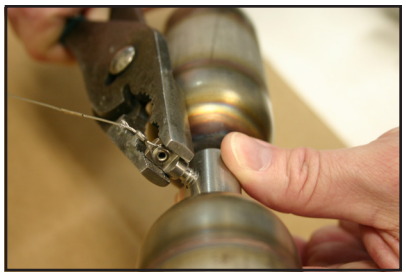

Figure 5

20. Next, you need to attach the float to the cable screw on the end of the gauge cable. Unscrew the cable bullet exposing the cable screw threads. The cable bullet is now no longer needed and can be discarded. Using the small tube of adhesive provided, place a drop or two of the adhesive onto the male threads, of the cable screw. Thread the float onto the cable screw and, while using pliers to carefully hold the float connector, snug the float onto the cable screw (See Figure 5). **NOTE: Make sure to not damage the cable with the pliers.**
21. **SLOWLY** lower the float into the tank. Guide the cable through your fingers letting the cable slide through slowly. **DO NOT** allow the float to free fall into the tank as this will cause the cable to come off of the pulley mechanism and render the gauge inoperable. **NOTE: make certain that when lowering the float, that the cable DOES NOT rub on the edge of the tank.**
22. Once the float is resting on the liquid level (or tank bottom if the tank is empty) apply PTFE tape to the adapter bushing. **DO NOT use pipe dope as this may get on the gauge cable and cause a malfunction.**
23. Swing the pipe assembly over and lift tank opening bushing onto tank opening and thread into place. **Make certain that you do not allow any excess slack in the cable or kink the cable in any way.**
24. Tighten the bushing and pipe unions.
25. Place the pulleys back into the pulley housings lifting the gauge cable onto the groove on the pulley. Reinstall the washers followed by the bolts; use a wrench to tighten bolts.
26. Now the gauge can be calibrated to the liquid level you found in step 6. Calibration is done one indicator wheel at a time (See Figure 6). Start with the inch indicator wheel. Grab the indicator wheel and push it to the left to clear the drive gear. The inch indicator wheel must be fully disengaged from the drive gear. The indicator wheel should now freely rotate. Rotate the wheel UPWARDS so that the numbers are counting up. Once at the correct setting, slowly let indicator wheel seat back into the drive gear. Failure to follow this procedure can cause damage to the internal mechanism and render the gauge inoperable. **Note: desired level reading needs to be in the center of the viewing window.**
27. Calibration for the foot readings is done in a similar manner pushing the indicator wheels to the left so they clear the gears that are offset below the indicator wheels (See Figure 6). Calibrate the ones' foot indicator wheel and then the tens' foot indicator wheel. **Note: desired level readings need to be in the center of the viewing window.** See Figure 7 (next page).
28. Slowly pull out about 1' of cable from the conduit body. Pull in a downward motion so you are lifting the float off the liquid level. Slowly let the cable back in. Pull in an upward motion so that the indicator wheels are rotating. Slowly let the cable back in. Make sure there is no binding or hang up in the cable. DO NOT pull and release the cable uncontrollably. This can cause damage to the internal mechanism and render the gauge inoperable. Replace the pulley covers insuring the o-rings are still in their machined grooves in the pulley housings.

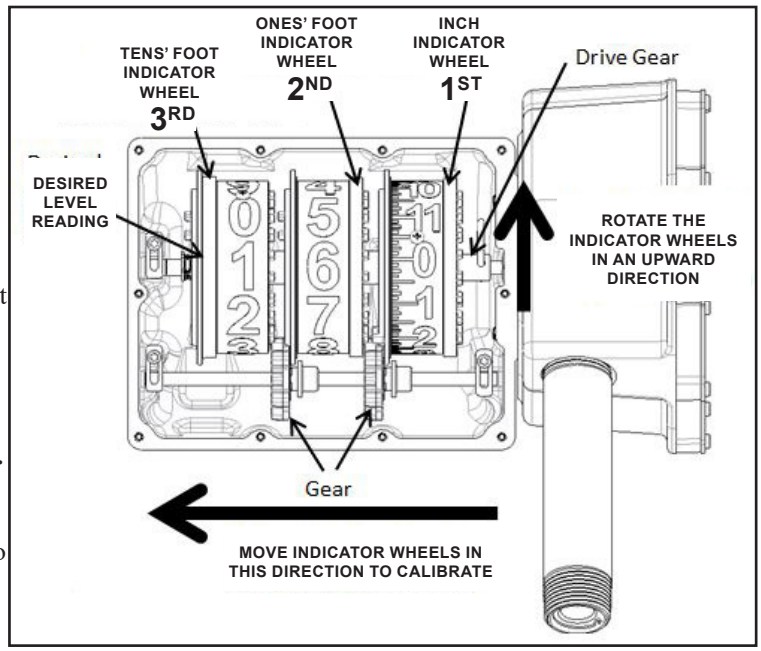

Figure 6

29. Reinstall the front cover, the correct settings should be clearly centered in viewing windows, as shown in Figure 7 (next page). If needed, adjust the indicator wheels.
30. The tank manufacturer's chart will be required to translate fluid height into fluid volume.

Failure to follow any or all of the warnings and instructions in this document could result in a hazardous liquid spill, which could result in property damage, environmental contamination, fire, explosion, serious injury or death.

1619 Calibrating the Alarm Set Point

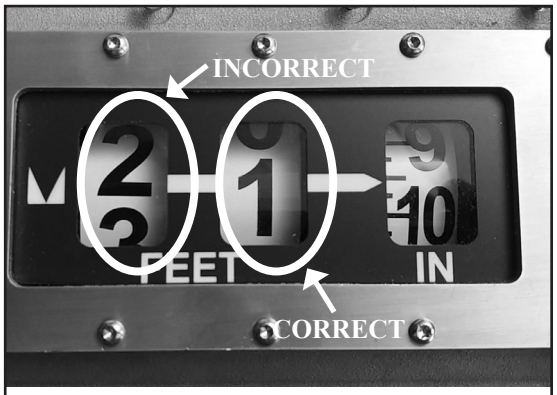

Figure 7

1. Each gauge's alarm set point will be factory defaulted to at 11' 1.
2. The alarm set point uses a magnet that is attached to the indicator wheel using a magnet positioner. The alarm set points are activated when the magnet is above the circuit board that is located behind the indicator wheels.
3. The magnet positioner has two unique ends, see Figure 8. The first end is the target end that will point to the desired set point level, and the second end has a pocket for the magnet to set into.
4. Start with the inch indicator wheel first. While holding the indicator wheel, remove the target end screw and place aside.
5. Push the inch indicator wheel to the left so that it disengages the drive gear and rotate the wheel upwards until you reach the magnet see Figure 9. Now let the indicator wheel seat back into the drive gear. While holding the indicator wheel, remove the magnet, screw and positioner and set these items aside.
6. Now push the indicator wheel to the left again to disengage from the drive gear. Rotate the indicator wheel upwards to the desired set point and allow the indicator wheel to seat into the drive gear.
7. Place the magnet positioner onto the indicator wheel with the target end aligned with the desired alarm set point, as shown in Figure 10. While holding the indicator wheel, thread the screw through the target end hole and into the matching hole in the indicator wheel. **DO NOT OVER TIGHTEN**, only snug up the screw.

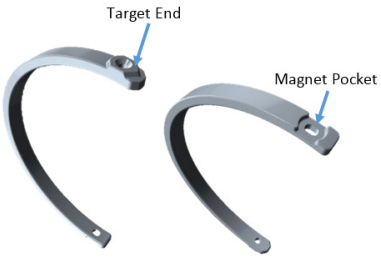

Figure 8—Magnet Positioner

8. Push the indicator wheel to the left again, disengaging the wheel from the drive gear. Rotate the wheel upwards to the magnet end. Place a screw through the magnet into the positioner and while holding the indicator wheel, thread into the indicator wheel. **DO NOT OVER TIGHTEN**, only snug up the screw.
9. Magnet positioners must be evenly placed on the wheels as in Figure 9 and Figure 10.
10. These steps are repeated for the one's foot wheel and the ten's foot wheel, see Figure 9.
11. Setting of the alarm point is now complete, return to page 2 and proceed with step 5 of Installation.

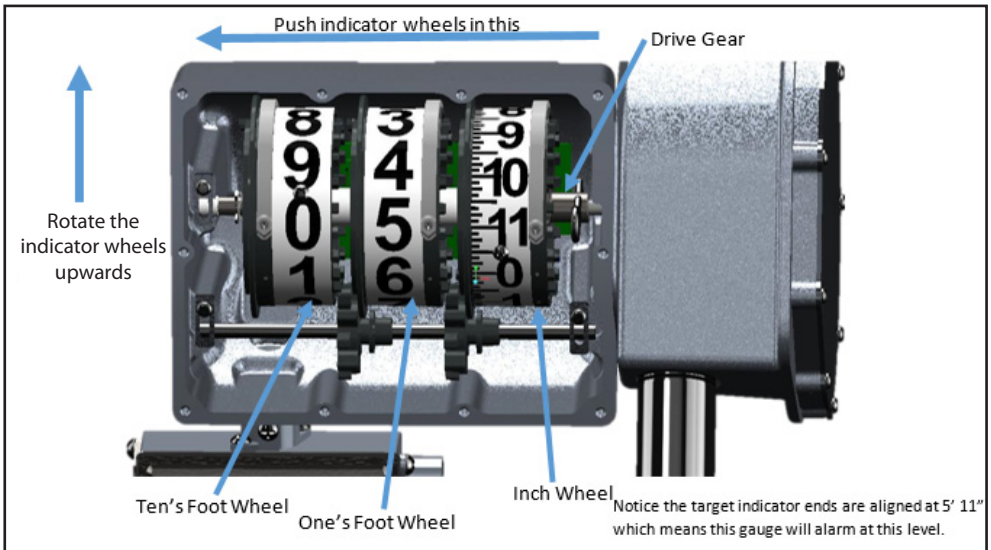

Figure 9—Setting the Wheels to the Desired Alarm Points

Figure 10—Target End Aligned to the Alarm Set Point

1619 Mounting the Power Module

IMPORTANT: The maximum wiring distance between the Gauge Head and the Power Module is 200 feet. Do not exceed this distance.

We recommend that the Power Module be mounted in close proximity to the associated Tank Alarm for the convenience of the operator to verify the operation of both before performing a fill operation.

NOTE: The Power Module MUST be mounted with the conduit opening on the bottom to prevent water ingress.

NOTE: The enclosure appears to be square, but it is not symmetrical in how the cover mounts to the base. Do NOT turn the enclosure 90 degrees and attempt to install the cover; it will not seal properly.

Mount the Power Module on a suitable surface with the wiring opening on the bottom using the holes provided in the mounting flanges of the enclosure.

1619 Wiring the Gauge Head

IMPORTANT: Do NOT wire the Gauge Head to the Power module with the battery connected to the Power Module Board.

The junction supplied with the Gauge Head has configurable conduit egress capability. It is shipped with the egress to the right as one faces the front of the Gauge Head. It has four (4) other options for your conduit connection:

- Left
- Back
- Bottom Left
- Bottom Right

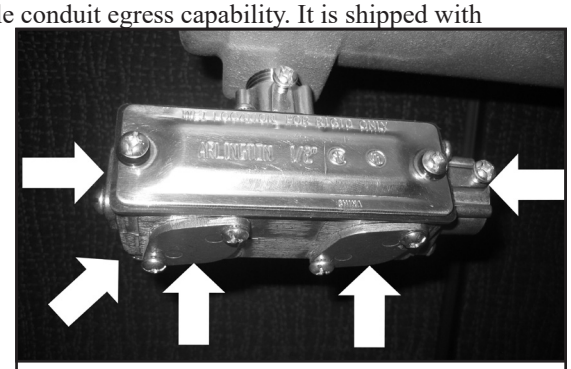

Figure 11—Junction Egress Points

To change the point of conduit connection,

1. Remove the two screws holding the conduit egress flange in place, being careful not to lose or damage the screws or the associated seal.

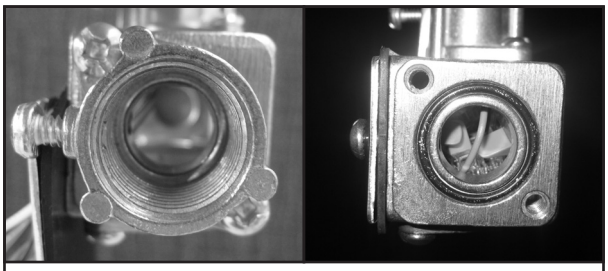

Figure 12—Remove Conduit Egress Flange

2. Remove the cover for the desired new egress point from the junction being careful not to lose or damage the screws or the associated seal.
3. Install the egress flange in the new location using the original screws and seal. Snug the mounting screws in place making sure the egress flange is properly seated.
4. Install the cover removed above into the original location using the original screws and seal. Snug the mounting screws in place making sure the cover is properly seated.

1619 Complete Wiring

1. Loosen the four corner screw holding the front cover of the Power Module in place.

NOTE: These are captive screws and are not intended to be removed.

2. Separate the Power Module's front cover from the base.
3. **Verify that the battery is NOT connected** to the Power Module Board. If it is connected, disconnect it before proceeding.
4. Install conduit between the Gauge Head and the Power Module.
5. Pull the recommended cable between the Gauge Head and the Power Module not to exceed 200 wiring feet.
6. Connect the cable wires at the Gauge Head and Power Module ends of the cable as laid out in Table 1.
   a. Remove approximately 6 inches of the outer jacket of the System Cable.
   b. Entirely remove the foil shield and the associated drain wire.
   c. Using the strip length guide on the side of the supplied WAGO 221, lever activated connectors, strip the conductors at the ends of the system cable to expose the conductor.
   d. Verify that the Gauge Head pigtail wires are also stripped using the strip length guide on the side of the supplied WAGO 221 connectors.
   e. Flip the levers up to the open position on the supplied WAGO 221 connectors.
   f. Follow the wiring chart in Table 1.
      i. Fully insert the wires into the WAGO connector and flip the lever down.
      ii. Visually inspect each connector. No bare copper should be visible.
      iii. Gently tug on each wire to verify that they have been captured by the connector.

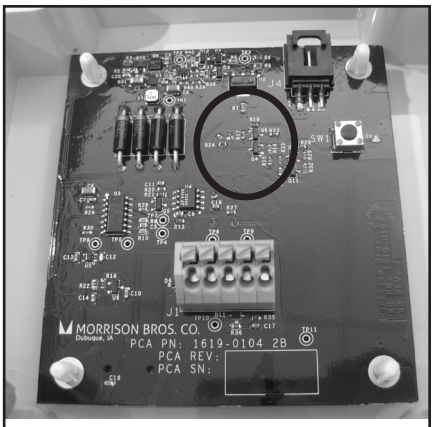

Figure 13—Ensure Battery is NOT Connected

Figure 14—WAGO Connector Showing Strip Length Guide (11mm/0.43") Levers in the OPEN Position

Figure 15—Completed WAGO Connection

6. Connect wires at power module as laid out...
   a. Remove approximately eight (8) inches of the outer jacket of the system cable (supplied)
   b. Remove the exposed foil shield. Do NOT cut the drain wire.
   c. Strip the ends of the five conductors to expose 9mm (0.35 inches) of bare copper.
   d. Wrap the drain wire with the black wire all the way to the end and twist the conductors together.
   e. Follow the wiring chart in Table 1
      i. Using a small screwdriver placed in the indentation of the contact release button, fully depress the contact release button while inserting the stripped wire all the way into the connector.
      ii. Release the contact release button.
      iii. Gently tug on the inserted wire to be sure the wire is properly captured in the connector.
      iv. Visually inspect the connections; no exposed copper should be visible.

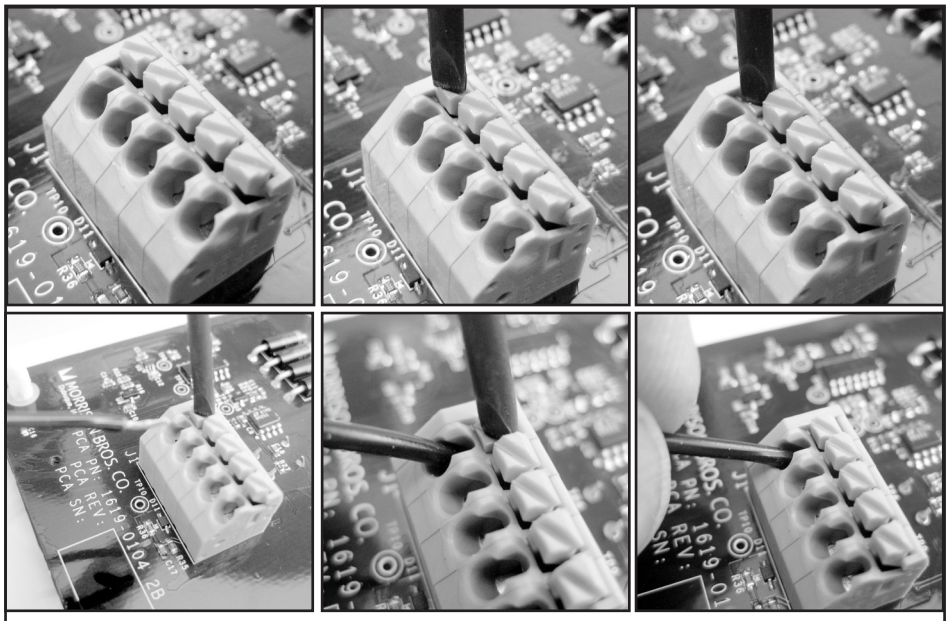

Figure 16—Connecting the System Cable to the Power Module

7. Run wires between the Dry Contact output of the Gauge Head and the associated Tank Alarm (see Table 1). Choose the contact type as is appropriate for the Tank Alarm to be used.

NOTE: There are eight (8) wires available in the junction box attached to the bottom of the gauge head.
Five (5) of these are wired to the Power Module.
Three (3) are the dry contact outputs that may be wired to your alarm system. One is Common, one is Normally Closed contacts and the other is Normally Open contacts. These are a bit longer than the ones that are wired to the Power Module.

Gauge Head Wire	Cable Conductor Colors	Power Module
RED	RED	J1.1
YELLOW	YELLOW	J1.2
ORANGE	ORANGE	J1.3
BROWN	BROWN	J1.4
BLACK	BLACK + Drain Wire	J1.5
----------	**TANK ALARM WARNING**	
BLUE	Normally OPEN Contacts CLOSE on alarm	To Tank Alarm using oil resistant wires
PINK	COMMON	
VIOLET	Normally CLOSED Contacts OPEN on alarm	

Table 1—Wiring Gauge Head to Power Module

1619 Initial Setup of Power Module

IMPORTANT: In order to accomplish the initial setup of the gauge head, the float level must be below the indicated set point.

EXAMPLE: If the alarm level was set at 11 feet 1 inch, then the float level must be below the 11 foot mark prior to completing this step.

1. Ensure the float level is below the set alarm level.
2. Loosen the four corner screw holding the front cover of the Power Module in place.

NOTE: These are captive screws and are not intended to be removed.

3. Separate the Power Module's front cover from the base.

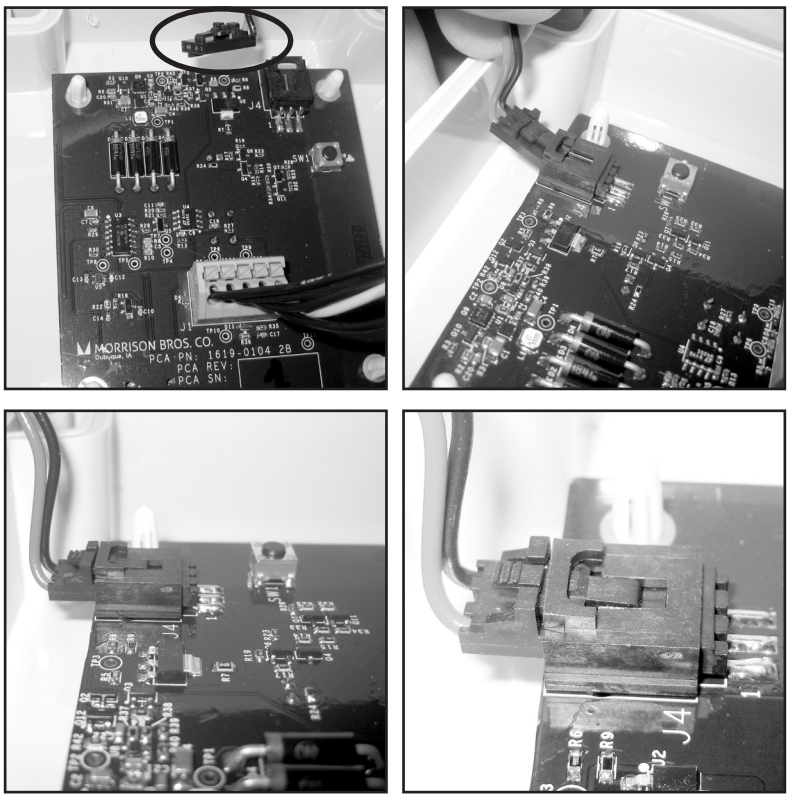

Figure 17—Connecting the Battery

4. Connect the Battery Cable to the Power Module Board's J4 connector in the upper right hand corner of the board. The front panel LED should flash momentarily if the system is alive. If this does not happen, disconnect the battery and check all wiring connections in the system before proceeding.
5. Press and hold the Test button for more than three (3) seconds. The Low Battery indicator on the front panel should flash momentarily and then extinguish. If this does not happen, disconnect the battery and check all wiring connections in the system before proceeding.
6. Locate the small pushbutton, SW1. Right next to the pushbutton is a small, green LED.
7. Press and hold the pushbutton until the LED flashes twice.
8. Release the pushbutton.
9. Replace the front cover back on the base being careful to establish the right registration of cover to base.
10. Secure the cover in place with the four corner screws.

1619 Verify Installation

For a 1619, gauge the system must be tested before installation is completed.

1. Remove the pipe plug and grab onto the cable (See Figure 18.)
2. To test a high-level alarm, slowly begin pulling downwards on the cable causing the float to rise in the tank, this whole time the gauge should be taking up the slack in the cable. To test a low-level alarm begin pulling the cable upwards causing the cable to fall into the tank.
3. Observe the reading on the gauge, if the alarm device alarms at the desired set point the test is completed; now slowly allow the float to drop and the cable back into the gauge. If the alarm device does not alarm, recheck the wiring, the calibration, and the alarm set point.

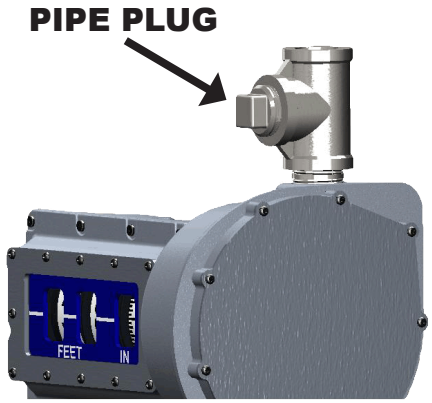

Figure 18

Operation

IMPORTANT: Prior to each use, it is imperative that the operation of BOTH the Gauge Head and the Tank Alarm be verified.

1619 Test the Operation of the Gauge Head

To verify the operation of the Gauge Head electronics and health of the battery, press and hold the "Test" button on the Power Module for at least 3 seconds.

If all is well, the "Battery Low" indicator will flash momentarily.

If the "Battery Low" indicator either does not flash at all or remains illuminated, then do not use the system or fill the tank until this is corrected. After this is corrected, the electronics must be reinitialized as described above in the "Initial Setup" section.

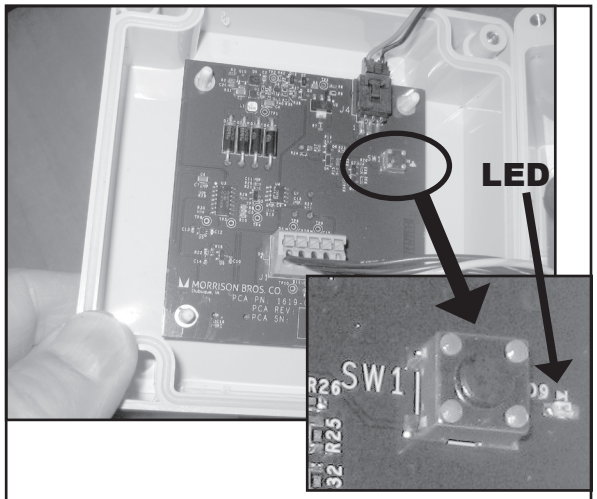

Figure 19—SW1 System Reset and its LED

1619 Test the Operation of the Associated Tank Alarm

In addition to checking the operation of the gauge head, the attached alarm system would also have to be verified as functional. Follow the manufacturer's instructions for verification of the attached alarm system prior to any fill operation.

If the Tank Alarm does not respond appropriately per its manufacturer's instructions, do not use the system or fill the tank until this is corrected.

WARNINGS

- **Fire Hazard** – Death or serious injury could result from spilled liquids.
- You must be trained to maintain this gauge. Stop now if you have not been trained.
- For your safety, it is important to follow local, state, federal and/or OSHA rules that apply to working inside, above, or around the storage tank and piping area. Use all personal protective equipment required for working in the specific environment.
- Tanks could be under pressure. Vapors could be expelled from tank vents, piping, valves or fittings while performing maintenance. Vapors could catch fire or cause an explosion. Avoid sparks, open flame, or hot tools when working on gauge.
- Use a dampened cloth when cleaning the clear front cover to prevent static buildup and discharge.
- In the event of malfunction, contact Morrison Bros. Customer Service.

This gauge should be maintained per applicable codes or at least once each year.

Steps

1. Visually inspect the gauge for damage or excessive wear. If either is found replace the gauge.
2. If necessary, clean the clear front lens with a damp cloth.
3. Measure the fluid height and verify the gauge reading. If readings do not match adjust the gauge setting according to the installation instructions.
4. Remove pipe plug at base/tank bracket to drain any condensation.

Check the Enclosure for water ingress no less than once per year.

Addtional steps for the 1619

1. Carefully open the Power Module enclosure cover by loosening the Phillips head fasteners at the four corners of the cover.
2. Inspect the interior of enclosure to determine if any water has infiltrated the enclosure. If water has infiltrated the enclosure, take corrective action to seal the points of ingress.
3. Inspect the electronics for corrosion. If there is corrosion present on the electronic assembly(ies)
   Take corrective action to seal the enclosure from further water ingress.
   Contact Morrison Bros. Co. for further action.
4. Reattach the front cover of the Alarm using the Phillips head fasteners at the four corners of the cover. DO NOT OVERTIGHTEN. “Snug” the fasteners in place and verify that the cover is fully seated to the enclosure base.

Optional Tank Branket (1618--0167 AB)

The 1618 optional tank bracket (see Figure 21) can be used to support the vertical pipe “B” (see Figure 4,19, and 20), or substituted for the supplied base (See Figure 2 and 3.)

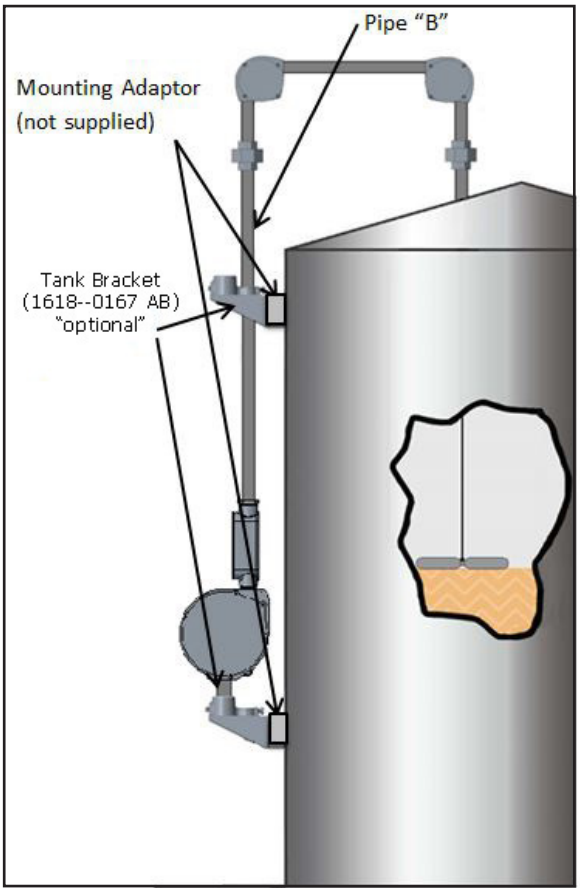

Figure 19

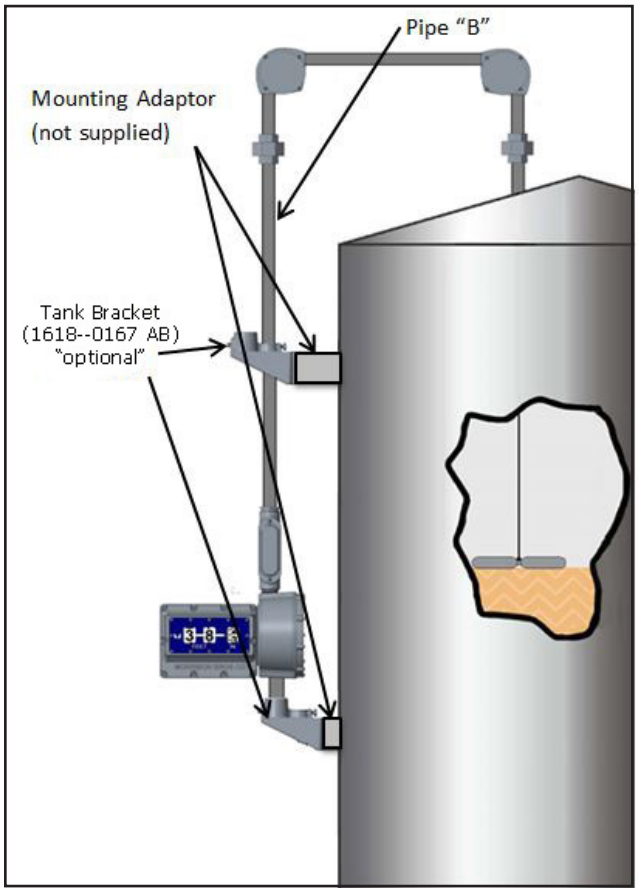

Figure 20

The installation requires mounting adaptors (not supplied) to mount the “optional” tank brackets to the side of the tank. This could be Unistrut or a fabricated bracket fixed to the tank.

Note: If the gauge is positioned with the numbered face perpendicular to the tank as shown in Figure 20, then the mounting adaptor holding pipe “B” will need to be different than the mounting adaptor holding the gauge. It will need to extend 2.4” farther from the tank and be offset .38” to the left of the mounting adaptor holding the gauge.

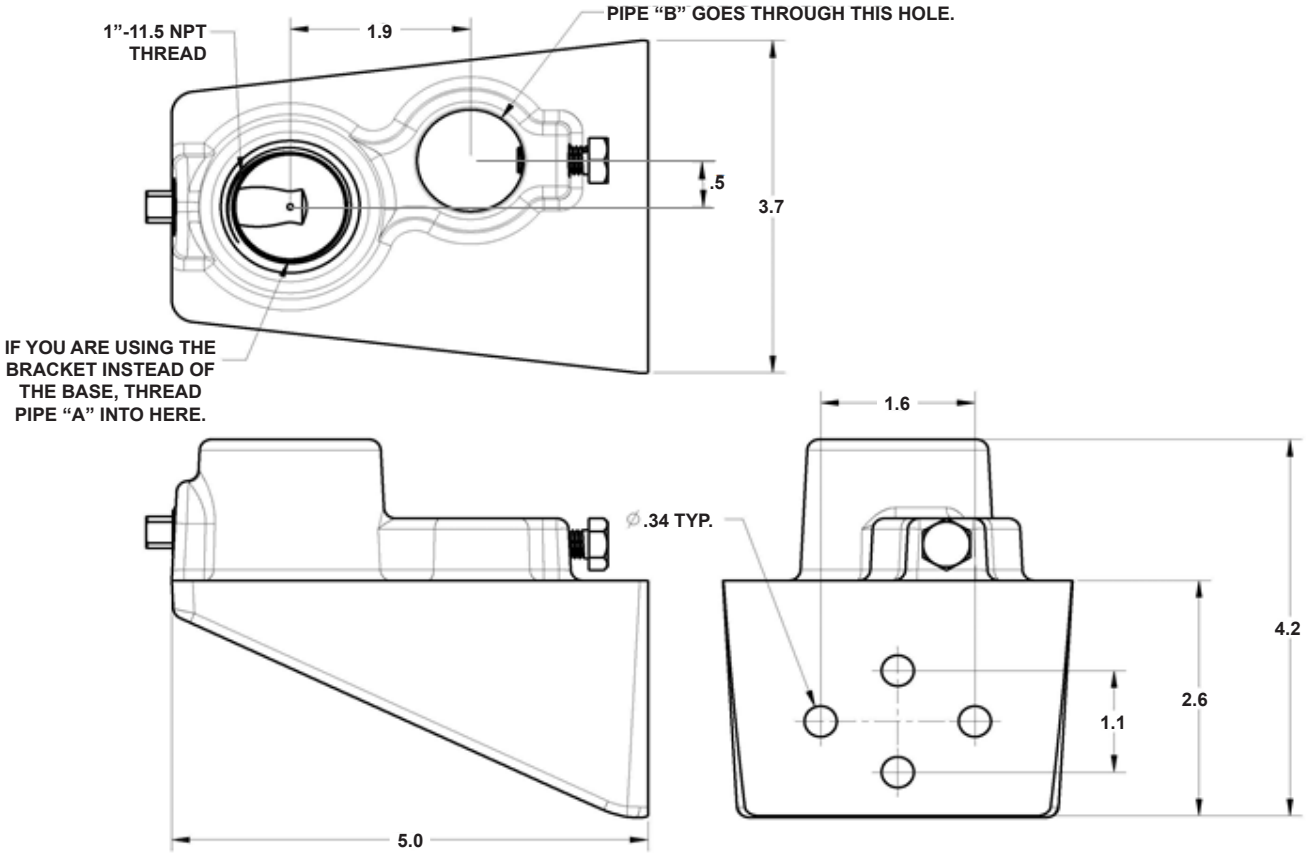

Figure 21

Items Not Supplied

- (1) Tank opening bushing: ¾” Female NPT x Male Tank opening size
- (2) 3/4” NPT pipe union
- 3/4” Schedule 40 pipe (length required: approximately the height of tank plus ½ of tank diameter-verify to site layout and installation instructions.)

If standard base is used:
- (4) 3/8” Concrete Anchors (with bolts or nuts)
- 1” Schedule 40 pipe (length required: approximately 6’-verifty to site layout and installation instructions.)

If optional tank bracket is used (per one bracket):
- (4) 5/16” bolts
- (1) mounting adaptor, such as Unistrut or fabricated bracket fixed to the tank (see Figures 19, 20, 21).
- 1” Schedule pipe to thread into bracket and gauge (could be a close nipple as long as gauge is eye level.)

CERTIFICATE OF COMPLIANCE

Certificate Number	E314627
Report Reference	E314627-20191210
Issue Date	2019-DECEMBER-16

Issued to: MORRISON BROTHERS CO
570 E 7Th St
Dubuque IA 52001-2378

This certificate confirms that representative samples of TANK-MONITORING EQUIPMENT FOR USE IN HAZARDOUS LOCATIONS

USL, CNL - Class I, Division 1, Group D Hazardous Locations

Tank Gauge, Models 1519 and 1619 Series, intrinsically safe when powered by battery pack Part No. 918SB-0128 2B and installed in accordance with control drawing B-7861-23_UL.

Have been investigated by UL in accordance with the Standard(s) indicated on this Certificate.

Standard(s) for Safety: Refer to Addendum Page for Standard(s).

Additional Information: See the UL Online Certifications Directory at https://iq.ulprospector.com for additional information.

This *Certificate of Compliance* does not provide authorization to apply the UL Mark. Only the UL Follow-Up Services Procedure provides authorization to apply the UL Mark.

Only those products bearing the UL Mark should be considered as being UL Certified and covered under UL's Follow-Up Services.

Look for the UL Certification Mark on the product.

Bruce Mahrenholz, Director North American Certification Program
UL LLC

Any information and documentation involving UL Mark services are provided on behalf of UL LLC (UL) or any authorized licensee of UL. For questions, please contact a local UL Customer Service Representative at http://ul.com/aboutul/locations/

CERTIFICATE OF COMPLIANCE

Certificate Number E314627
Report Reference E314627-20191210
Issue Date 2019-DECEMBER-16

This is to certify that representative samples of the product as specified on this certificate were tested according to the current UL requirements.

Standard(s) for Safety:

Standard No. UL 913, 5th Ed., Rev. February 21, 1997, Intrinsically Safe Apparatus and Associated Apparatus for Use in Class I, II, and III, Division 1, Hazardous (Classified) Locations
Standard No. CAN/CSA-C22.2 No. 157, 3rd Ed., Issued 2006-01-01, Intrinsically Safe and Non-Incendive Equipment for Use in Hazardous Locations.
Standard No. UL 508 STANDARD FOR INDUSTRIAL CONTROL EQUIPMENT- Edition 17 - Revision Date 2013/10/16
Standard No. CSA C22.2 NO. 14-13 INDUSTRIAL CONTROL EQUIPMENT- Edition 12 - Issue Date 2013/03/01

Bruce Mahrenholz, Director North American Certification Program
UL LLC

Any information and documentation involving UL Mark services are provided on behalf of UL LLC (UL) or any authorized licensee of UL. For questions, please contact a local UL Customer Service Representative at http://ul.com/aboutul/locations/

Created by UL Document Assembler 2020-02-06 07:11:19 -06:00

FOLLOW-UP SERVICE PROCEDURE
(TYPE R)

TANK-MONITORING EQUIPMENT FOR USE IN HAZARDOUS LOCATIONS
(WWQS,WWQS7)

Manufacturer: SEE ADDENDUM FOR MANUFACTURER LOCATIONS

Applicant: (537837-003)
618577 (Party Site)
MORRISON BROTHERS CO
570 E 7Th St
Dubuque IA 52001-2378

Listee: (537837-003)
618577 (Party Site)
SAME AS APPLICANT

Use of the Mark

This Follow-Up Service Procedure authorizes the above Manufacturer(s) to use the marking specified by UL LLC, or any authorized licensee of UL LLC, including the UL Contracting Party, only on products when constructed, tested and found to be in compliance with the requirements of this Follow-Up Service Procedure and in accordance with the terms of the applicable service agreement with UL Contracting Party. The UL Contracting Party for Follow-Up Services is listed in the addendum to this Follow-Up Service Procedure ("UL Contracting Party"). UL Contracting Party and UL LLC are referred to jointly herein as "UL."

It is the responsibility of the Applicant, Manufacturer(s), and Listee/Classified Co. to make sure that only the products meeting the aforementioned requirements bear the authorized Marks of UL LLC, or any authorized licensee of UL LLC.

Created by UL Document Assembler 2020-02-06 14:56:49 -06:00