REPORT

SITE CERTIFICATION PETITION FOR MODIFICATION

City of Tallahassee

Arvah B. Hopkins Power Plant

PA 74-03O

Submitted To: Siting Coordination Office (SCO)
2600 Blair Stone Road, MS 5500
Tallahassee, FL 32399-2400

Submitted By: Golder Associates Inc.
6026 NW 1st Place
Gainesville, FL 32607 USA

Date: April 2017

Project No. 16-68430

Golder, Golder Associates and the GA globe design are trademarks of Golder Associates Corporation

EXECUTIVE SUMMARY

This document is submitted to the Florida Department of Environmental Protection (FDEP) pursuant to 403.516 Florida Statutes (F.S.) and 62-17.211, Florida Administrative Code (F.A.C.) for the addition of four Wartsila 18.82 megawatt (MW) spark-ignition gas-fired electric generators (the "Project") at the City of Tallahassee's Arvah B. Hopkins (Hopkins) Plant. Hopkins Unit 2 was certified under Florida's Power Plant Siting Act (PPSA) and the proposed Project will be located on an existing portion of the Certified Site. The FDEP Conditions of Certification (PA 74-03O) Condition A.XXIII require that any anticipated facility expansion be obtained through an amendment, modification or certification. The proposed Project does not propose any steam generating capability addition to the Hopkins Site and is therefore being submitted as a Petition for Modification. The proposed Project will replace two existing early 1970s vintage combustion turbines with a net summer rating of 12 MW and 24 MW, respectively, as well as Unit 1 an existing 76 MW steam electric generating unit.

In accordance with Section 403.516(c)(1), F.S. and Rule 62-17.211(1)(b), F.A.C., this Petition for Modification describes the reason for the modification, changes to the Site layout, and anticipated environmental impacts of the Project. No changes in the existing Conditions of Certification are necessary as a result of the Project.

Table of Contents

1.0 INTRODUCTION 1
1.1 City of Tallahassee - Electric Utility – Background and Generation Needs 1
1.2 Arvah B. Hopkins Power Plant 2
1.3 Project Overview 2
2.0 PROJECT DESCRIPTION 4
2.1 Project Layout 4
2.2 Fuel 4
2.3 Air Emissions and Controls 4
2.4 Plant Water Use 5
2.5 Chemical and Biocide Waste 5
2.6 Solid and Hazardous Waste 5
2.7 Onsite Drainage System 6
2.8 Project Construction, Heavy Equipment and Materials 7
3.0 ENVIRONMENTAL CHARACTERIZATION AND IMPACTS 9
3.1 Land Use and Zoning 9
3.2 Air Impacts 9
3.3 Noise 9
3.3.1 Background 9
3.3.2 Noise Standards 10
3.3.3 Background Noise Levels 11
3.3.3.1 2004 Noise Monitoring 11
3.3.3.2 2006 Noise Monitoring 12
3.3.3.3 2008 Noise Monitoring 12
3.3.3.4 Summary of Noise Monitoring 12
3.3.4 Noise Impacts 13
3.3.4.1 Methodology 13
3.3.5 Impact Analysis 14
3.4 Water Use 14
3.5 Stormwater 14
3.6 Changes in Non-Aquatic Species Populations 14
3.7 Traffic 15
3.8 Cultural and Archaeological Resources 15
4.0 CONDITIONS OF CERTIFICATION 16

List of Tables

Table 2-1 Potential Dismantlement Material and Disposal Options
Table 3-1 City of Tallahassee Hopkins Power Plant, Measured Sound Pressure Levels, March 2004
Table 3-2 City of Tallahassee Hopkins Power Plant, Measured Sound Pressure Levels, February 2006
Table 3-3 City of Tallahassee Hopkins Power Plant, Measured Sound Pressure Levels, August 2008
Table 3-4 City of Tallahassee Hopkins Power Plant, Summary of Measured Sound Pressure Levels, March 2004, February 2006 and August 2008
Table 3-5 City of Tallahassee Hopkins RICE Engine Project – Background Noise Levels and Predicted Noise Impacts

List of Figures

Figure 1-1 City of Tallahassee Hopkins Plant Location
Figure 2-1 Project Layout
Figure 2-2 Required Modification to SWMFS
Figure 2-3 Construction Laydown and Parking Areas
Figure 3-1 Noise Modeling Results

List of Appendices

Appendix A Air Construction/Prevention of Significant Deterioration Permit Application
Appendix B Stormwater
Appendix C Noise Sources

1.0 INTRODUCTION

1.1 City of Tallahassee - Electric Utility – Background and Generation Needs

The City of Tallahassee ("City") owns, operates, and maintains an electric generation, transmission, and distribution system that supplies electric power in and around the corporate limits of the City. The City's Electric Utility presently serves approximately 117,825 customers located within a 221 square mile service territory. The Electric Utility operates three generating stations with a total summer season net generating capacity of 746 megawatts (MW).

The City has two fossil-fueled generating stations, which contain combined cycle (CC) units consisting of combustion turbines (CTs) and associated steam turbines as well as simple cycle CTs. The Sam O. Purdom Generating Station, located in the City of St. Marks, Florida has been in operation since 1952; and the Arvah B. Hopkins Generating Station ("Hopkins"), located on Geddie Road west of the City, has been in commercial operation since 1970. The City has also been generating electricity at the C.H. Corn Hydroelectric Station, located on Lake Talquin west of Tallahassee, since August of 1985.

To meet generation needs, including consideration of existing resources reaching the end of their useful life, the City of Tallahassee proposes to install four 18.82 megawatt (MW) natural gas fired generating units at Hopkins located in Leon County, Florida (Figure 1-1). The four units will be Wartsilia Model 18V50SG four-cycle spark-ignition engines (also referred to as fueled reciprocating internal combustion engines—RICE) fired with natural gas and connected to associated electric generators (the "Project"). The Hopkins Site has been certified under Florida's Power Plant Siting Act [PPSA; 403.501-.519, F.S.] (PA 74-03O). The certification includes Unit 2A, HC3 and HC4 as well as associated facilities. Units 1, CT-1, and CT-2 pre-date the PPSA and, therefore, are not certified. Since the Hopkins Site is certified, a petition for modification pursuant to 403.516,F.S., 62-17.211(1)(b)(1), F.A.C. and Condition A.XXIII of the Conditions of Certification is being submitted to the Florida Department of Environmental Protection (FDEP) for the Project.

To obtain a modification, the requirements of 403.516(1)(c) F.S. and 62-17.211(1)(b)(1), F.A.C., must be met. For convenience, the requirements are listed below.

- The licensee may file a petition for modification with the Department, or the Department may initiate the modification upon its own initiative.
  - A petition for modification requested by the applicant must set forth:
    - The proposed modification
    - The factual reasons asserted for the modification, including the changes of circumstance which justify the modification

- A statement of whether, and if so, how the proposed modification would affect the conditions of certification, the site layout or the design as depicted in the current application
- The anticipated environmental effects of the proposed modification

This Petition for Modification describes the reason for the modification, changes to the Site layout, and anticipated environmental impacts of the Project. No changes or additions to the Conditions of Certification are necessary as a result of the Project. As a result, this SCA modification application addresses only those environmental aspects that will be changed by the Project.

1.2 Arvah B. Hopkins Power Plant

The Hopkins Site is located approximately 7 miles west of the center of the City of Tallahassee in Leon County, Florida. The Universal Transverse Mercator (UTM) coordinates for the center of the Site are 749.4 km east and 3371.7 km north. The Site is in Section 25 and 26, Township 1 North, Range 2 West. The western boundary of the Hopkins Site is Geddie Road (County Road 1585), and part of the eastern boundary is the CSX railroad. South of the Site is State Road 20 and north of the Site is U.S. Highway 90.

The Hopkins Generating Station is presently comprised of two steam electric generating units (Units 1 and 2A), two Westinghouse combustion turbines (referred to as CT-1 and CT-2), two General Electric (GE) LM6000 combustion turbines (referred to as HC-3 and HC-4). Units 1, CT-1, and CT-2 pre-date the PPSA and are not certified. They have been in operation since before September 1972. HC-3 and HC-4 began operation in 2005. Unit 2 was originally certified in 1975, and was re-powered as a General Electric 7FA combined cycle combustion turbine via a modification in 2006 (startup in 2008), now referred to as Unit 2A.

1.3 Project Overview

The Project will consist of four Wartsila Model 18V50SG natural gas fired generators that produce 18.82 MW at 100 percent load.

The selection of the Wartsila Model 18V50SG gas engines was based on an evaluation of the City of Tallahassee's generation needs and existing generation resources, some of which are reaching their useful life and will be retired. The advantages of the four RICE engines include, among others (City of Tallahassee, 2017-2026 Ten-Year Site Plan):

- The RICE generators are more efficient than the units that are being retired providing significant potential fuel savings.
- The RICE generators can be started and reach full load within 5 to 10 minutes. In addition, their output level can be changed very rapidly. This, coupled with the number and size of each unit, makes them excellent for responding to the changes in output from intermittent resources such as solar energy systems and may enable the addition of more solar resources in the future.

- Multiple RICE generators provide greater dispatch flexibility..
- The CO_2 emissions from the RICE generators are much lower than the units scheduled to be retired.

2.0 PROJECT DESCRIPTION

2.1 Project Layout

The Project layout is shown in Figure 2-1. The location of the Project is the same as the existing combustion turbines CT-1 and CT-2.

2.2 Fuel

The fuel used in the engines will be natural gas. The generating capacity of the Wartsila engines is not as significantly affected by ambient temperature as a gas turbine but has slightly reduced efficiency at higher ambient temperatures. Therefore, for the purpose of calculating fuel use quantities an ambient temperature of 104 degrees Fahrenheit (°F) was used. The maximum heat input for each engine is 138.5 million British thermal units per hour (MMBtu/hr), low heating value (LHV) [153.7 MMBtu/hr, high heating value (HHV)], when firing natural gas [100 percent capacity, 104 degrees °F]. The corresponding maximum fuel usage is about 0.146 million cubic feet per hour (MMcf/hr) of natural gas for each engine. Maximum potential fuel usage is about 1.25×10^9 cubic feet per year (cf/yr) of natural gas for the Project operating 8,760 hr/yr.

Natural gas will be transported to the facility via existing pipeline. No onsite storage will be provided for natural gas.

2.3 Air Emissions and Controls

The Wartsila Model 18V50SG engine is the world's largest four-stroke spark-ignited gas engine. The engines are lean-burn engines with pre-chamber mixing and low peak combustion temperatures to reduce formation of nitrogen oxides (NO_x) while insuring proper combustion to minimize the emissions of carbon monoxide (CO) and volatile organic compounds (VOCs). The Wartsila Engine Control System (WECS) is designed to control each cylinder to insure optimal control and operation. Each engine will also be equipped with selective catalytic reduction (SCR) to control NO_x emissions to 5 parts per million volume-dry (ppmvd) corrected to 15 percent O_2 and an oxidation catalyst to control CO emissions to 15 ppmvd corrected to 15 percent O_2. These emission rates will be over the complete range of operation (100 percent load down to 40 percent load).

The Wartsila engines will be required to comply with EPA's New Source Performance Standards for spark-ignition internal combustion engines in 40 Code of Federal Regulations Part JJJJ and EPA's National Emission Standards for Hazardous Air Pollutants (NESHAPS) for reciprocating internal combustion engines in 40 CFR Part 63 Subpart ZZZZ. The use of the SCR and oxidation catalyst will reduce emissions of NO_2, CO, VOC and formaldehyde to levels well below the federally mandated emission limits in these regulations.

The Project is required to undergo review pursuant to FDEP's Prevention of Significant Deterioration (PSD) requirements that include a determination of Best Available Control Technology (BACT). PSD review is required for several air pollutants: volatile organic compounds (VOCs), particulate matter (PM), PM_{10} with an aerodynamic diameter of 10 microns or less (PM_{10}), $PM_{2.5}$ with an aerodynamic diameter of 2.5 microns or less ($PM_{2.5}$), and greenhouse gases (GHGs). The use of clean fuel (i.e., natural gas), combustion technology, oxidation catalyst and efficiency of the Wartsila engine are proposed as BACT for the Project. In addition, the use of SCR reduces emissions to levels considered as BACT on many similar projects.

The Air Construction/PSD Permit Application for the Project provides detailed information on air emissions and control technology proposed for the Project. This document is attached as Appendix A to this Petition for Modification and is submitted separately to the FDEP Division of Air Resource Management.

2.4 Plant Water Use

The operation of the Wartsila engines does not require continued water use, as a closed-cycle radiator is used for cooling. The amount of water to replenish the closed-cycle cooling system is about 1 gallon/week. General service water uses will including cleaning, flushing and fire protection, and will be provided by the existing process/service water system.

The use of potable water will not increase as a result of the Project as no additional staff is required. Some minor amounts of potable water will be used during construction and supplied by existing systems or bottled water. Portable sanitary systems will be used during construction as necessary.

2.5 Chemical and Biocide Waste

There are minimal chemical wastes associated with the operation of the Project. The cooling system is a closed-cycle radiator and does not require the use of biocides.

2.6 Solid and Hazardous Waste

Construction contractors will be required to implement Best Management Practices (BMPs) to minimize spills. Maintenance and refueling will be performed only in designated areas. Any spills will be cleaned up and wastes disposed of in accordance with applicable requirements.

Solid wastes will be generated by the operation of the Project, but generally in very small quantities. Such solid wastes will be limited to small amount of municipal solid waste (MSW), infrequent replacement of inlet air filters, and operations and maintenance wastes. Oil filters will be recycled or disposed as an oily waste. Approved disposal contractors will dispose of all wastes.

The City will operate the Project to minimize, if not eliminate, the generation of hazardous waste. Hazardous wastes, if any, will be collected onsite and disposed of by a licensed hazardous waste contractor.

Hazardous waste will be managed according to applicable rules and regulations as is the current practice at the Hopkins Plant.

Solid waste materials generated during Project construction will be disposed of in accordance with applicable rules and regulations. Construction and dismantlement wastes, such as scrap metal, will be transferred to a specified storage area on the Site where they will be separated and stockpiled for salvage and recycling. Table 2-1 presents potential dismantlement material, sources and disposal options. General waste materials (i.e., typical of MSW) will be collected in appropriate waste collection containers for disposal at an approved offsite location.

All solid and hazardous waste generated will be handled in accordance with Condition of Certification A.XXX.III.

2.7 Onsite Drainage System

Operational site stormwater runoff that is from non-contact stormwater areas (non-oil/water sources) will be handled by modification to the existing stormwater management system. The modifications are described in detail in Appendix B, shown on Figure 2-2, and are summarized as follows:

1. Raise the spillway to elevation 129.82 (NAVD 88). A concrete spillway similar to the detail shown on the attached plan would be installed. The existing rock that is in place would be moved to the toe of the new spillway.

2. Raise the concrete baffle wall that is located inside the existing outfall structure from a top elevation 128.58 to elevation 129.0 (NAVD 88).

3. Raise the top of the pond berm/dam to a uniform and consistent elevation of 131.3 (NAVD 88). The 100 year design highwater in the pond is 130.22 (NAVD 88) and 1 foot of freeboard above the 100 year highwater to the top of the pond is required.

4. Grading for the area at the west end of the pond would be performed where the new site improvements encroach on the pond. The modification to the existing pond volume was determined by stormwater modeling.

This stormwater management system will provide the required water quality treatment, attenuation, and stage storage through the dry detention pond located on the site. The treated stormwater will be released via the existing discharge structure at not erodible discharge rates.

Contact stormwater oil/water sources will be routed to an oil/water separator via an oil/water waste piping system. Secondary containment will be provided at the source of large oil storage volumes (large transformers and oil storage tanks). Curb barriers and drains will be used at smaller oil/water sources. All oil/water separator effluent will be routed to the existing Plant waste water treatment system.

The construction of the Project will be under FDEP's Generic Permit for Stormwater Discharge from Large and Small Construction Activities [FDEP Rule 62-621.300(4)(a), F.A.C.] and existing Conditions of Certification A.V.B., A.XXVII., and B.V.B. The Notice of Intent (NOI) will be submitted to FDEP at least two days prior to commencement of construction.

Prior to submitting the NOI for the construction permit, a comprehensive Stormwater Pollution Prevention Plan (SWPPP) will be prepared, as required under the Generic Permit, addressing the construction of the Project.

During construction, storm water will be managed by implementing the construction storm water management system before decommissioning begins. Storm water discharges will be controlled to meet the requirements of the Generic Permit for Construction, Conditions A.V.B. and A.XXVII. and appropriate pollution prevention techniques will be implemented to minimize erosion and sedimentation and properly manage storm water.

2.8 Project Construction, Heavy Equipment and Materials

Figure 2-3 presents the construction laydown and parking areas. The Site has been occupied by an operating power generation facility for more than 45 years. The areas to be used for Project construction, including the construction parking and laydown areas have been previously impacted. The soils are generally suitable for the development of the Project, obviating the need for substantial filling. Unsuitable soils will be removed and fill added, as necessary. The construction parking and laydown area may be stabilized with rock, limestone, and shell. Other more lightly used areas may be seeded or sodded with grass to prevent erosion.

Access to the Site including the construction parking and laydown areas is Geddie Road. Geddie Road is connected to U.S. Highway 90 to the north of the Site and State Road (SR) 20 south of the Site.

Construction materials and equipment will be delivered to the Hopkins Plant, including the construction parking and laydown areas, by existing roadways. Equipment and component parts of the Project will be unloaded and moved using portable cranes and trucks. Some of the heaviest items, such as the Wartsila generating set (about 400 tons), may require special transport. Equipment that cannot be transported to the area by highway may be transported to the site by rail. All transport will comply with applicable Florida

Department of Transportation requirements, including those related to overweight and over-dimensional loads in Chapter 316, F.S., and Chapter 14-26, F.A.C.

The construction workforce for the Project is expected to be 200 or less workers at the peak of construction activities. Initial decommissioning of CT-1 and CT2 will begin in April 2017 and will not exceed 1 acre in size. Construction of the Project is expected to take approximately 12 to 18 months, beginning in the second half of 2017 and concluding summer/fall 2018.

Fugitive dust generation from construction traffic will be minimized through the use of existing paved roads and the use of water sprinkling or other dust-suppressant techniques.

3.0 ENVIRONMENTAL CHARACTERIZATION AND IMPACTS

3.1 Land Use and Zoning

During the original 1974-75 certification proceeding for Hopkins Unit 2, the Site was determined to be consistent with the land use plans and zoning ordinances of Leon County, Florida. The Project will be constructed wholly within the Site previously determined consistent with the County's land use plans and zoning ordinances.

While the Site has already been deemed consistent, we also provide the following as to land use and zoning consistency. The Hopkins Site is currently designated Governmental Operations on the Future Land Use Map. This land use designation expressly allow "Electric Generating Facilities." Leon County Comprehensive Plan, Future Land Use Element, Policy 2.2.1.6.

The current zoning under the Leon County Code is Light Industrial (M-1). M-1 districts are designated suburban and urban areas that have convenient access to transportation facilities, where facilities and activities, including "community" facilities that are compatible with light industrial operations are permitted. Sec. 10-6.6.52, Leon County Code. Permitted principal uses include "utilities" and "heavy infrastructure". Heavy Infrastructure – as defined in the Comprehensive Plan Glossary– falls under the category of a "Community Facility" and includes uses such as Electric Generating Facilities.

3.2 Air Impacts

The Project is required to be reviewed under FDEP's PSD requirements that include determination of compliance with National Ambient Air Quality Standards (NAAQS) and PSD Class I and II Increments for PM_{10} and $PM_{2.5}$. Air modeling using EPA and FDEP approved dispersion models and meteorological data demonstrated that the Project would fully comply with NAAQS and PSD Class I and Class II Increments. The Air Construction/PSD Permit Application for the Project provides detailed information on air quality impacts for the Project. This document is attached to this Petition for Modification as a referenced document and is submitted separately to the FDEP Division of Air Resources Management.

3.3 Noise

3.3.1 Background

Sound propagation involves three principal components: a noise source, a person or a group of people, and the transmission path. While two of these components, the noise source and the transmission path, are easily quantified (i.e., by direct measurements or through predictive calculations), the effect of noise on humans is the most difficult to determine due to the varying responses of humans to the same or similar noise patterns. The perception of sound (noise) by humans is very subjective, and just as for odors and taste, it is very difficult to predict a response from any particular individual to these levels.

Noise above certain levels can impact the health and welfare of plant employees, the general public and wildlife. The magnitude of noise levels or loudness is referred to as sound pressure level (SPL), with units in decibels (dB). Decibels are calculated as a logarithmic function of SPL in air to a reference effective pressure, which is considered the hearing threshold, or:

$$SPL = 20 \log_{10} (P_e/P_o)$$

where: P_e = measured effective pressure of sound wave in micropascals (µPa), and

P_o = reference effective pressure of 20 µPa.

To account for the effect of how the human ear perceives sound pressure, at moderate to low levels, SPLs are adjusted for frequency (or pitch). One of the most commonly used frequency filters is the A-weighting (dBA), which adjusts measurements for the approximated response of the human ear to low frequency SPLs [i.e., below 1,000 hertz (Hz)] and high frequency SPLs (i.e., above 10,000 Hz).

The measured noise levels are typically expressed as percentiles of occurrence (L_n), where *n* is a user-selected value and expressed as:

- L_{eq} - The sound pressure level averaged over the measurement period; this parameter is the continuous steady sound pressure level that would have the same total acoustic energy as the real fluctuating noise over the same time period
- L_{max} - The maximum sound pressure level for the sampling period
- L_{min} - The minimum sound pressure level for the sampling period
- L_n - The sound pressure levels which were exceeded n percent of the time during the sampling period ranging from 0.01 to 99.99. The percentiles of occurrences typically are L_5, L_{10}, L_{50}, L_{90} and L_{95}, which correspond to SPLs that are exceeded 5%, 10%, 50%, 90% and 95% of the time. For example, L_{90} is the level exceeded 90 percent of the time.

Noise has two different types of effects on people: the direct physical effects such as hearing loss and the less direct effects involving interference with activities such as sleep and conversation. In the early 1970s, the EPA established numerical noise standards. The noise standards were developed without considering cost or technical feasibility. In developing these standards, the EPA drew upon a large body of survey data describing the degree of activity interference and resulting annoyance for a variety of noise levels. However, these standards were never implemented by EPA.

3.3.2 Noise Standards

There are no Florida or federal noise regulations applicable to the Project. There are no applicable local noise standards to the Project. The City of Tallahassee has a noise ordinance that establishes noise limits within the Urban Core District and receiving properties outside the Urban Core District. (Chapter 12-92

through 12-97, Division 2-Excessive Noise, Article IV-Offenses Involving Public Peace and Order, City of Tallahassee Code of Ordinances; Ordinance No. 15-O-37AA, § 2, 1-27-2016). This noise ordinance does not apply to Hopkins facility pursuant to Section 12-95 (g). Leon County has a qualitative noise ordinance but this ordinance does not apply within the City of Tallahassee boundaries (Article II, Section 12-53, Leon County Code of Ordinances).

3.3.3 Background Noise Levels

Ambient noise levels were obtained at three separate periods associated with the new and existing generating units at the Hopkins Power Plant. A baseline noise survey was conducted in 2004 for the SCA modification associated with new combustion turbines (HC-3 and HC-4). In 2006, additional noise monitoring was conducted for the SCA Modification of Hopkins Unit 2 Repowering Project. Noise measurements were also taken in 2008 to determine noise levels with repowered Hopkins Unit 2 operating. These ambient noise measurements are summarized in the following sections.

3.3.3.1 2004 Noise Monitoring

On March 29 and 30, 2004 Golder performed a background noise survey to assess the existing ambient noise levels in the vicinity of the Hopkins Plant. The sound pressure levels (SPLs) and octave band data were collected at four distinct locations to delineate the existing background noise levels at or near the north, south, east and west perimeters of the facility. Type I integrating sound level meters were used that were calibrated according against National Institute of Standards and Testing (NIST) standards. The equipment used to monitor the baseline noise levels operated in the slow response mode to obtain accurate, integrated, A-weighted sound pressure levels. A windscreen was used because all measurements were taken outdoors. The microphone was positioned so that a random incidence response, as specified by the American National Standard Institute (ANSI), was achieved. The sound level meter and octave band analyzer were calibrated immediately prior to and just after the sampling period to provide a quality control check of the sound level meter's operation during monitoring.

During the noise survey, Hopkins Unit 1 was not operating, but Unit 2 was fully operational. The combustion turbines were operated for two consecutive hours during the daytime and two consecutive hours during the nighttime. Each monitoring location had an individual sound level meter to simultaneously collect and record background noise levels. Noise monitoring was continuously performed at the four monitoring locations so that the daytime (7 a.m. to 10 p.m.) and nighttime (10 p.m. to 7:00 a.m.) hours were measured. Monitoring was conducted using the sound level meter mounted on a stanchion at a height of 1.2-m (4-ft) above grade. Local meteorological conditions (wind speed, wind direction, temperature, and relative humidity) were measured during the monitoring periods. The operator recorded detailed field notes during monitoring and included major noise sources in the area.

A summary of the results are presented in Table 3-1.

3.3.3.2 2006 Noise Monitoring

A noise monitoring program was conducted on February 7 and 8, 2006 at four monitoring stations at the boundaries of the Hopkins Power Plant. Unit 2 was operating during the monitoring with intermittent operation of Unit 1 and CT1 through CT4. The methods and locations were similar to those performed in 2004 with the exception that specific daytime and nighttime noise measurements were taken at each location. Two daytime measurements and one nighttime measurements were obtained. The results of the noise monitoring is presented in Table 3-2.

3.3.3.3 2008 Noise Monitoring

Noise monitoring was conducted in August 2008 that included three on-site locations inside the station's fence line. Unit 2A was operating during the monitoring with intermittent operation of CT1 through CT4. Data were collected at these locations on August 11th, 12th, 18th, and 19th, 2008 during different operational conditions. The noise monitoring methods were similar to those used in 2004 and 2006. Since this monitoring was to specifically identify operational noise two locations were within the plant boundary and one monitoring location was near the boundary. The results of this monitoring is presented in Table 3-3. Monitoring location identified as Monitoring Location 2 was in a similar location as Monitoring Location 3 from the 2004 and 2006 studies.

3.3.3.4 Summary of Noise Monitoring

Table 3-4 presents a summary of the sound levels taken in 2004 and 2006. This table also presents the sound levels taken in 2008 for the monitoring location most representative of the Monitoring Location 3 location. The highest L_{90} background noise levels were used in the analysis. The L_{90} is the sound level that is exceeded 90 percent of the time and excludes the majority of the transient noise sources, such as motor vehicles and aircraft. In contrast, the equivalent continuous sound level (L_{eq}) or the average sound pressure level, represents all the noise observed over the sampling period. There are a number of transient sources that occur with any the background monitoring such as motor vehicles, aircraft, barking dogs, and birds. As a result, the L_{90} is a representative background for predicting the contribution of the Project to overall noise levels in the vicinity of the plant and is representative of the overall noise levels from operating noise source. The L_{90} sound levels used in the impact analysis were:

- Monitoring Location 1. Hopkins Plant Boundary - South of Generating Units – 50 dBA
- Monitoring Location 2. Hopkins Plant Boundary - Geddie Road Northwest of Generating Unit – 54 dBA
- Monitoring Location 3. Hopkins Plant Boundary - Railroad Track Northeast of Generating Units – 55 dBA
- Monitoring Location 4. Hopkins Plant Boundary - Transmission Corridor Southeast of Generating Units – 46 dBA

3.3.4 Noise Impacts

3.3.4.1 Methodology

The methodology for determining the potential noise impacts for the operation of the Project were developed using the CadnaA computer model, a computerized software program for calculation, presentation, assessment and prediction of environmental noise (DataKustik, 2008).

CadnaA is an environmental noise propagation computer program that was developed to assist with noise propagation calculations for major noise sources and projects. Noise sources are entered as octave band sound power levels (L_w). Locations of the noise sources, structures, and receptors are input directly on the base map and can be edited throughout the modeling process. All noise sources are assumed to be a point, line, area, or vertical area source, and can be specified by the user. Sound propagation is calculated by accounting for hemispherical spreading and three other user identified attenuation options: atmospheric attenuation, path specific attenuation, and barrier attenuation. Atmospheric attenuation is calculated using International Organization for Standardization, ISO 9613-1 *Attenuation of Sound During Propagation Outdoors - Part 1: Calculation of the Absorption of Sound by the Atmosphere*. The CadnaA path-specific attenuation can be specified to account for the effects of soil, vegetation, foliage, and wind shadow. Directional source characteristics and reflection can be simulated using path-specific attenuation. Barrier attenuation is calculated by assuming an infinitely long barrier perpendicular to the source-receptor path. Total and A-weighted SPLs are calculated.

The noise impacts for operation were evaluated using the sound power levels for the various types of sources associated with the Project. There were 15 noise sources included in the model consisting of the four Wartsila engines, air intakes and exhausts. Three sources were used for the air cooling fans. The sound power levels used in the analysis for the Project were based on information provided by Wartsila (see Appendix B). The location of each noise source was based on its location in a computerized Project layout. The computerized drawing was imported into the CadnaA model for the noise analysis. The heights of the major structures were also input into CadnaA, developing a three-dimensional representation. Sources were input into CadnaA as point, area, and vertical area sources with appropriate dimensions.

The design of the Project includes components that mitigate noise from being emitted to the surrounding environment. The majority of the noise sources, such as the Wartsila engines, are located within enclosures or compartments that mitigate sounds emitted by equipment. The L_w used in the analysis are presented in Appendix C. The atmospheric attenuation was set at the CadnaA default value, which is 10 degrees centigrade (°C) (50°F) and 70 percent relative humidity. The ground attenuation for the area was set to represent mixed adsorption to reflect a mixture of paved surfaces, water, and vegetation.

3.3.5 Impact Analysis

Table 3-5 presents the background noise levels for the four monitoring locations and the predicted noise impacts from the Project at each monitoring location. Figure 3-1 presents the noise contours for the Project. The noise impacts were also predicted within the residential area northeast of the Hopkins Plant near the transmission corridor (approximately ¼ mile from the Project location). This corridor has no vegetation to attenuate noise. The overall noise level is the background noise level that is logarithmically combined with the predicted noise impacts. The background noise levels include the operation of Unit 2 Unit 2A as well as other non-intermittant noise sources at the Hopkins Plant. The noise impacts are predicted to increase from 0.1 dBA at Monitoring Location 2 to 4 dBA at Monitoring Location 4. Monitoring Location 4 is located along the transmission corridor southeast of the Hopkins Plant and not near any residential areas. The noise levels are predicted to increase 1.5 dBA within the residential area northeast of the Hopkins Plant along the transmission corridor. A difference of less than 3 dBA in SPLs is not noticeable by human hearing. In addition, the predicted 1.5 dBA increase is within the typical margin of error (3 dBA) in noise modeling due to temporal changes in noise sources.

3.4 Water Use

As described in Section 2.4, cooling for each Wartsila 18V50SG is provided by a closed system with very minor water requirements (1 gallon/week). No impacts are expected to ground or surface water as the project will not require any additional water to be withdrawn from current sources at the plant or result in any additional surface or ground water discharge.

3.5 Stormwater

The wastewaters generated by the Project will include wash water, and equipment area stormwater. The stormwater management system for the Project has been designed to meet local, regional, state, and federal permit requirements, which include the applicable rules of the North Florida Water Management District (NFWMD), Leon County, FDEP, and EPA.

3.6 Changes in Non-Aquatic Species Populations

No adverse impacts to non-aquatic species are anticipated during operation of the Project, as the area proposed for the Project has been used for the existing Hopkins Generating Station facilities and does not provide significant suitable natural habitat for wildlife. The area designated for the Project has been significantly disturbed during construction and operation of the existing Hopkins facilities, including removal of forested vegetative communities and topographic grading. The open, cleared areas designated for location of the construction laydown and parking are not considered critical habitat for any species of wildlife. The surrounding forested parcels will continue to provide habitat for wildlife; therefore, construction and operation of the Project is not anticipated to result in the reduction of any populations of non-aquatic species.

No adverse impacts to federal- or state-listed terrestrial plants or animals are expected, due to the existing developed nature of the habitat within the Project area.

3.7 Traffic

Construction and operational traffic associated with the Project will access the Site from Geddie Road which is connected to U.S. Highway 90 to the north of the Site and State Road (SR) 20 south of the Site. Geddie Road is a two-lane road with annual average daily traffic (AADT) of 5,100 (FDOT Traffic Online (2015); http://flto.dot.state.fl.us/website/FloridaTrafficOnline/viewer.html). The AADT truck traffic on Geddie Road is 388. U.S. Highway 90 is a divided four-lane divided highway that is signalized at the intersection with Geddie Road. SR 20, Blounttown Highway is a two-lane highway that is not signalized and contains north-bound turn lanes. The AADT for U.S. Highway 90 and SR 20 near the intersections with Geddie Road are >16,000 and >9,000, respectively. The AADT truck traffic for U.S. Highway 90 and SR 20 near the intersections with Geddie Road are >650 and >1,360. Based on the nature of the roadways and reported AADT, roadways accessing the Site operate at acceptable Level-of-Service (LOS) (FDOT Generalized Average Annual Daily Volumes for Urban Areas). The peak amount of construction traffic, including construction workers and trucks, is a very small percentage of AADT and significantly under AADT volumes that would have unacceptable LOS.

3.8 Cultural and Archaeological Resources

Construction and operation of the Project is expected to have no effect on archaeological resources. No significant or potentially significant archaeological properties would be affected by construction and operation since the designated areas have been previously impacted. In the event that post-construction activities result in the discovery of archaeological materials, activities that have the potential to disturb those materials will be halted until an evaluation of their potential significance is made by a professional archaeologist. If the materials are believed to be significant, the State Historic Preservation Officer (SHPO) will be consulted to identify appropriate measures.

4.0 CONDITIONS OF CERTIFICATION

The current Conditions of Certification for the City of Tallahassee Arvah B. Hopkins Power Plant (PA 74-03O), were last modified September 20, 2016. The construction and operation of the Project will not require any revision to these existing Conditions of Certification. The submittal of the Air Construction/Prevention of Significant Deterioration Permit application and subsequent issuance of the Air Construction Permit and Title V permit would be incorporated by reference pursuant to Condition A.V. A. The stormwater management plan has been developed with consideration of Condition Section A. V. B. 2. NPDES Generic Permit for Stormwater Discharge from Large, Condition Section A. V. B. 3. NPDES Multi-Sector Generic Permit for Stormwater Discharge Associated with Industrial Activity and Small Construction Activities, Condition Section A. XXVII. B. Surface Water Management Systems (SWMS) and Condition Section B. I. D. Stormwater Discharge.

TABLES

Table 2-1. Potential Dismantlement Material and Disposal Options

Potential Material	Potential Media and Location	Management Options
Asbestos	Buildings, tiles, cables and lines.	Asbestos will be abated consistent with the State's rules and by a licensed contractor in accordance with 469.003, F.S.
Lead Paint	Buildings, tanks, handrails and miscellaneous structures.	Paint chips will be cut and drummed for characterization, if necessary, and proper disposal.
Tanks/Structure and Washwater	Tanks and structures on site that require washing prior to dismantling.	Decontaminated tanks cut for recycling and salvaged or disposed of as solid waste Washwater characterized and disposed by an approved contractor.
Soil and Other Contaminated Media	No current knowledge of contamination.	Soil excavation will be conducted in accordance with Hopkins spill response procedures and FDEP Bureau of Waste Cleanup requirements.
Ash, Concrete, Scrap Metal	Buildings, structures, etc.	Material will be recycled or disposed of in an approved landfill as appropriate.
Hazardous / Universal Wastes and Hazardous Materials	Multiple types of unused or spent media including batteries, lamps, thermostats and pesticides.	Recycled or reused, or stored and managed in accordance with Hopkins waste management procedures and applicable regulations.

Table 3-1. City of Tallahassee Hopkins Power Plant, Measured Sound Pressure Levels, March 2004

Noise Monitoring Location	Dates	Sound Levels (dBA)			
		L_{95}	L_5	L_{90}	L_{eq}
1. Hopkins Plant Boundary - South of Generating Units	March 29 and 30, 2004	37	53	39	50
2. Hopkins Plant Boundary - Geddie Road Northwest of Generating Units	March 29 and 30, 2004	53	69	54	63
3. Hopkins Plant Boundary - Railroad Track Northeast of Generating Units	March 29 and 30, 2004	44	68	45	65
4. Hopkins Plant Boundary - Transmission Corridor Southeast of Generating Units	March 29 and 30, 2004	38	56	39	53

Source: Golder Associates Inc., 2017

Table 3-2. City of Tallahassee Hopkins Power Plant, Measured Sound Pressure Levels, February 2006

Noise Monitoring Location	Date	Time	Sound Levels (dBA)			
			L_{min}	L_{max}	L_{90}	L_{eq}
1. Hopkins Plant Boundary - South of Generating Units	7-Feb-06	Daytime 1	45	61	47	49
	8-Feb-06	Daytime 2	50	58	50	52
	7-Feb-06	Nighttime	49	63	50	52
2. Hopkins Plant Boundary - Geddie Road Northwest of Generating Units	7-Feb-06	Daytime 1	48	82	50	68
	8-Feb-06	Daytime 2	48	80	50	66
	7-Feb-06	Nighttime	53	75	54	59
3. Hopkins Plant Boundary - Railroad Track Northeast of Generating Units	7-Feb-06	Daytime 1	46	54	47	49
	8-Feb-06	Daytime 2	47	57	48	49
	7-Feb-06	Nighttime	49	58	49	50
4. Hopkins Plant Boundary - Transmission Corridor Southeast of Generating Units	7-Feb-06	Daytime 1	41	55	42	45
	8-Feb-06	Daytime 2	45	54	46	48
	7-Feb-06	Nighttime	44	70	46	54

Source: Golder Associates Inc., 2017

Table 3-3. City of Tallahassee Hopkins Power Plant, Measured Sound Pressure Levels, August 2008

Monitoring Location-Run		Date	Time	Sound Levels (dBA)			
				L_{min}	L_{max}	L_{90}	L_{eq}
1-1	Northeast of Hopkins Unit 2	11-Aug-08	Daytime	56.2	63.3	57.8	58.8
1-2		11-Aug-08	Nighttime	53.9	76.4	54.6	61.4
1-3		18-Aug-08	Daytime	51.2	82.2	56.2	62.5
1-4		18-Aug-08	Daytime	53.9	79.8	57.5	63.1
1-5		18-Aug-08	Daytime	56.1	67.1	58.5	60.3
1-6		18-Aug-08	Daytime	58.6	88.4	60.2	62.5
1-7		18-Aug-08	Daytime	58.1	63.0	59.4	60.4
1-8		19-Aug-08	Daytime	53.2	73.6	54.9	57.7
2-1	East of Hopkins Unit 2	11-Aug-08	Nighttime	53.8	60.6	54.8	55.4
2-2		18-Aug-08	Daytime	47.2	59.4	48.6	53.6
3-1	North of Hopkins Unit 2	18-Aug-08	Daytime	52.8	60.7	55.0	57.1
3-2		18-Aug-08	Daytime	56.8	64.3	58.8	60.6
3-3		19-Aug-08	Daytime	47.4	66.1	49.0	50.7

Source: Golder Associates Inc., 2017.

Table 3-4. City of Tallahassee Hopkins Power Plant, Summary of Measured Sound Pressure Levels, March 2004, February 2006, and August 2008

Noise Monitoring Location	Dates		Sound Levels (dBA)			
			L_{95}/L_{min}	L_5/L_{max}	L_{90}	L_{eq}
1. Hopkins Plant Boundary - South of Generating Units	March 29 and 30, 2004	24-hour	37	53	39	50
	February 7 and 8, 2006	Nighttime	49	63	50	52
	February 7 and 8, 2006	Daytime [a]	50	61	50	52
2. Hopkins Plant Boundary - Geddie Road Northwest of Generating Units	March 29 and 30, 2004	24-hour	53	69	54	63
	February 7 and 8, 2006	Nighttime	53	75	54	59
	February 7 and 8, 2006	Daytime [a]	48	82	50	68
3. Hopkins Plant Boundary - Railroad Track Northeast of Generating Units	March 29 and 30, 2004	24-hour	44	68	45	65
	February 7 and 8, 2006	Nighttime	49	58	49	50
	February 7 and 8, 2006	Daytime [a]	47	57	48	49
	August 11, 2008	Nighttime [b]	54	61	55	55
	August 18, 2008	Daytime [b]	47	59	49	54
4. Hopkins Plant Boundary - Transmission Corridor Southeast of Generating Units	March 29 and 30, 2004	24-hour	38	56	39	53
	February 7 and 8, 2006	Nighttime	44	70	46	54
	February 7 and 8, 2006	Daytime [a]	45	55	46	48

[a] Maximum of the two observed sound daytime levels.

[b] 2008 monitoring run 2-2 representaing daytime sound levels.

Source: Golder Associates Inc., 2017

Table 3-5. City of Tallahassee Hopkins RICE Engine Project - Background Noise Levels and Predicted Noise Impacts

Noise Monitoring Location	Background Noise Level [a] (dBA)	Predicted Impacts (dBA)	Overall Noise Level (dBA)	Increase (dBA)
1. Hopkins Plant Boundary - South of Generating Units	50	49.5	52.6	2.9
2. Hopkins Plant Boundary - Geddie Road Northwest of Generating Units	54	37.9	54.2	0.1
3. Hopkins Plant Boundary - Railroad Track Northeast of Generating Units	55	49.1	55.8	1.0
4. Hopkins Plant Boundary - Transmission Corridor Southeast of Generating Units	46	47.5	49.7	4.0
Residential Area - Near Transmission Cooridor - Northeast of Hopkins Plant	55	50.8	56.3	1.5

[a] Highest L_{90} noise levels.

[b] 2008 monitoring run 2-2 representaing daytime sound levels.

Source: Golder Associates Inc., 2017

FIGURES

LEGEND

- Proposed Project Location
- Property Boundary

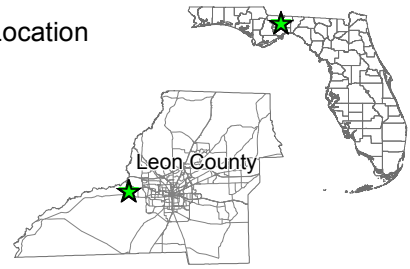

REFERENCE(S)

1. PROPERTY BOUNDARY, FLORIDA DEPARTMENT OF REVENUE, 2015.

COORDINATE SYSTEM: NAD 1983 UTM ZONE 16N
PROJECTION: TRANSVERSE MERCATOR
DATUM: NORTH AMERICAN 1983

CLIENT
CITY OF TALLAHASSEE

PROJECT
HOPKINS GENERATING STATION

TITLE
LOCATION OF PROPOSED PROJECT AT THE A.B. HOPKINS STATION

CONSULTANT
Golder Associates

YYYY-MM-DD	2016-09-27
DESIGNED	GFD
PREPARED	GFD
REVIEWED	SM
APPROVED	KK

PROJECT NO.	CONTROL	REV.	FIGURE
1655646	A002	0	1-1

PATH: G:\PROJECTS\City of Tallahassee\Hopkins Generating Station\99 PROJECTS\1655646 AB Hopkins Plant\1655646 A A\Modeling\02 PRODUCTION\MXD\1655646 A002 Proposed Project Site.mxd
IF THIS MEASUREMENT DOES NOT MATCH WHAT IS SHOWN, THE SHEET SIZE HAS BEEN MODIFIED FROM: ANSI A
25mm
0

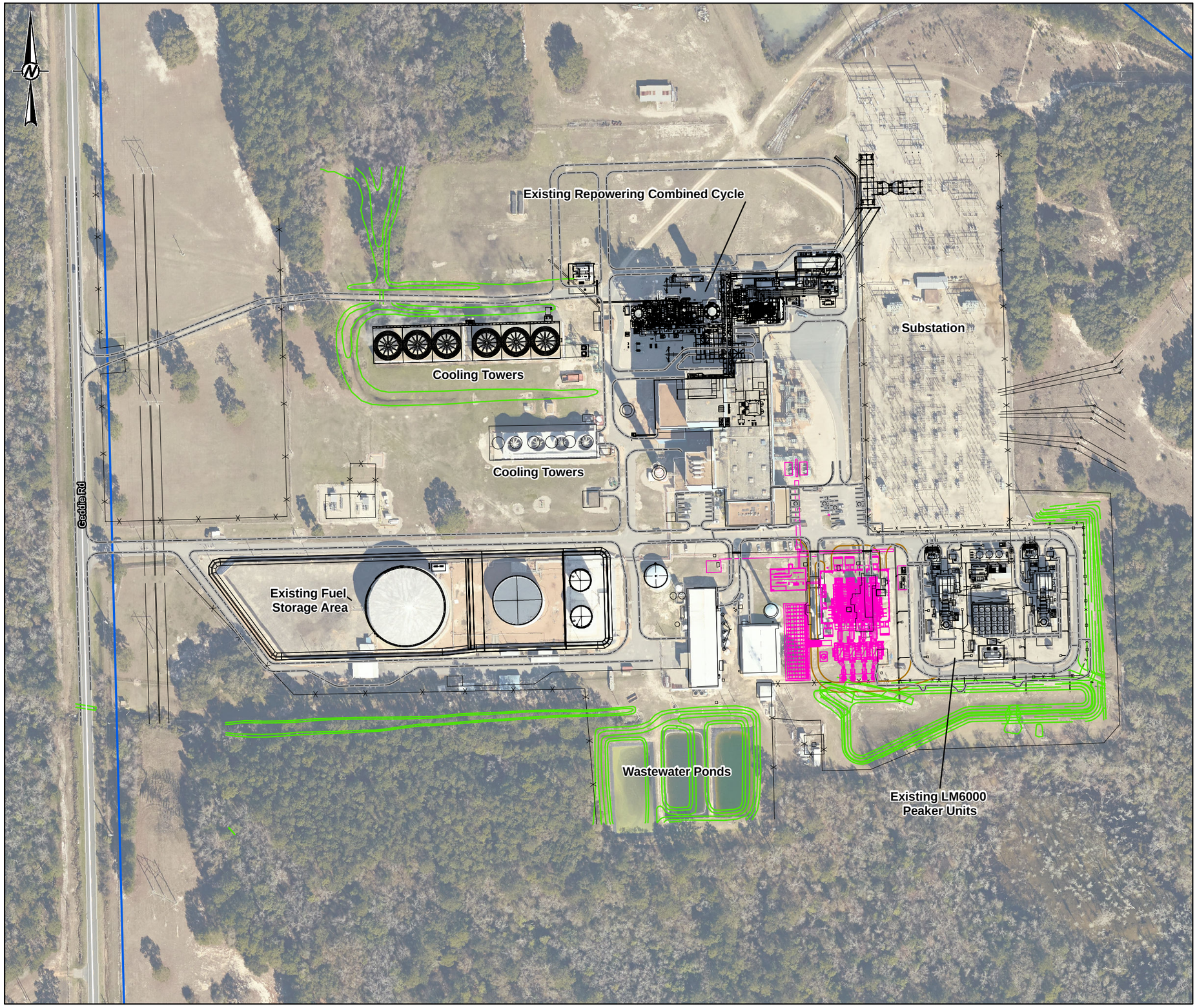

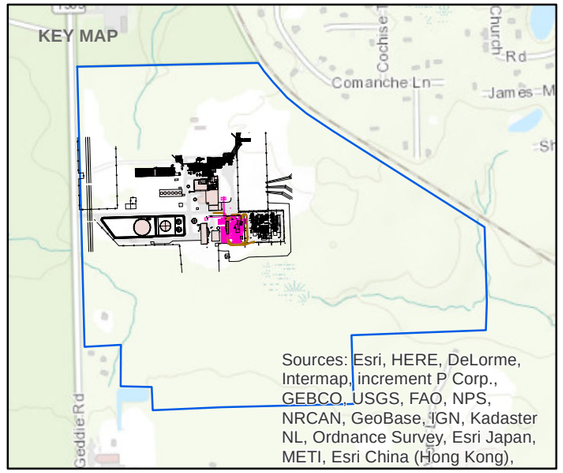

LEGEND

- Plant Boundary
- Existing Site Layout
- Proposed Site Layout
- Existing Roads
- Proposed Roads
- Stormwater

0 100 200 400

1:2,400 FEET

REFERENCE(S)

1. SITE LAYOUT, ROADS, SARGENT & LUNDY, 2017.
2. AERIAL IMAGERY, FLORIDA DEPARTMENT OF TRANSPORTATION, 2015.

COORDINATE SYSTEM: NAD 1983 UTM ZONE 16N
PROJECTION: TRANSVERSE MERCATOR
DATUM: NORTH AMERICAN 1983

CLIENT
CITY OF TALLAHASSEE

PROJECT
HOPKINS GENERATING STATION

TITLE
SITE LAYOUT

CONSULTANT
Golder Associates

YYYY-MM-DD	2017-04-21
DESIGNED	GFD
PREPARED	GFD
REVIEWED	SM
APPROVED	KK

PROJECT NO.	CONTROL	REV.	FIGURE
1668430	A003	0	2-1

PATH: G:\PROJECTS\City_of_Tallahassee\Hopkins_Generating_Station\99_PROJECTS\1668430_ABHopkins_Plant\1668430_A_AirModeling\02_PRODUCTION\MXD\1668430_A003_Site_layout.mxd

IF THIS MEASUREMENT DOES NOT MATCH WHAT IS SHOWN, THE SHEET SIZE HAS BEEN MODIFIED FROM: ANSI B

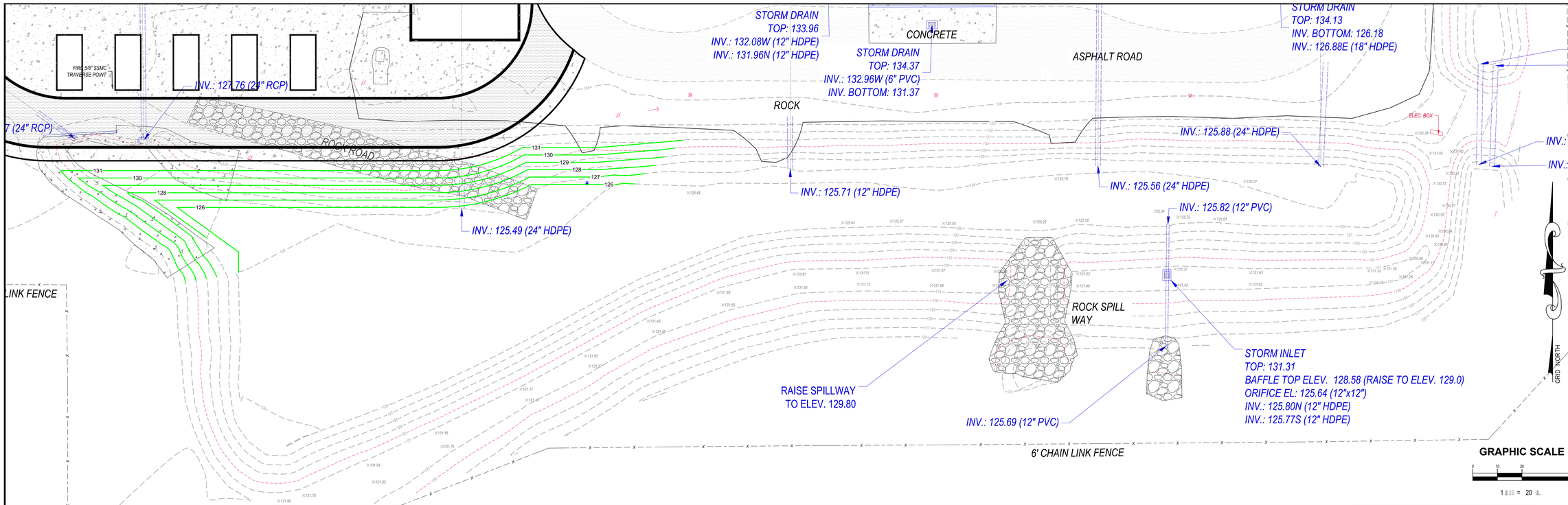

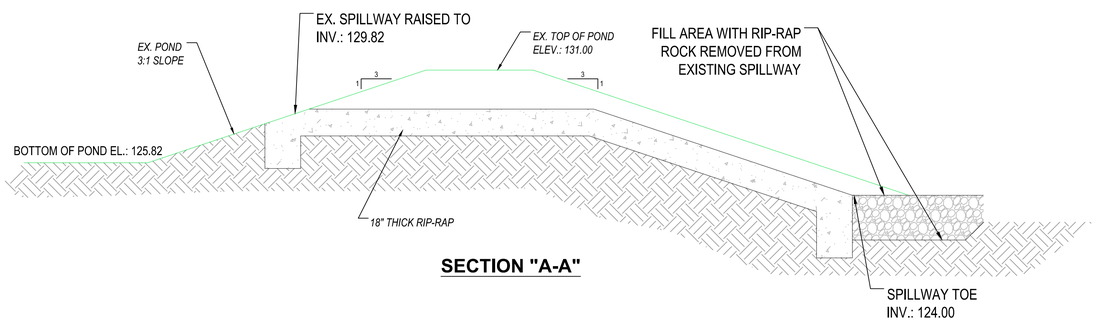

SECTION "A-A"

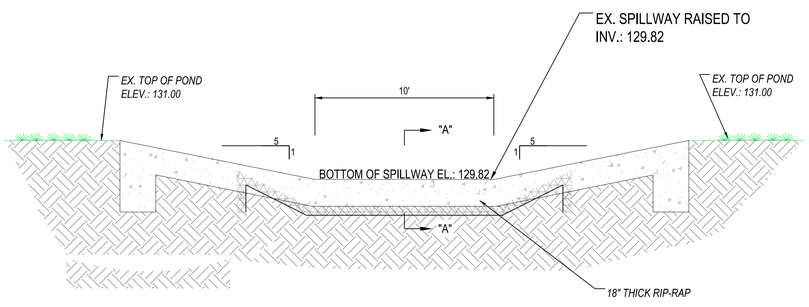

FIGURE 2-2

SCHEMATIC DETAIL FOR MODIFICATION TO EMERGENCY SPILLWAY

SCALE: 1" = 4'

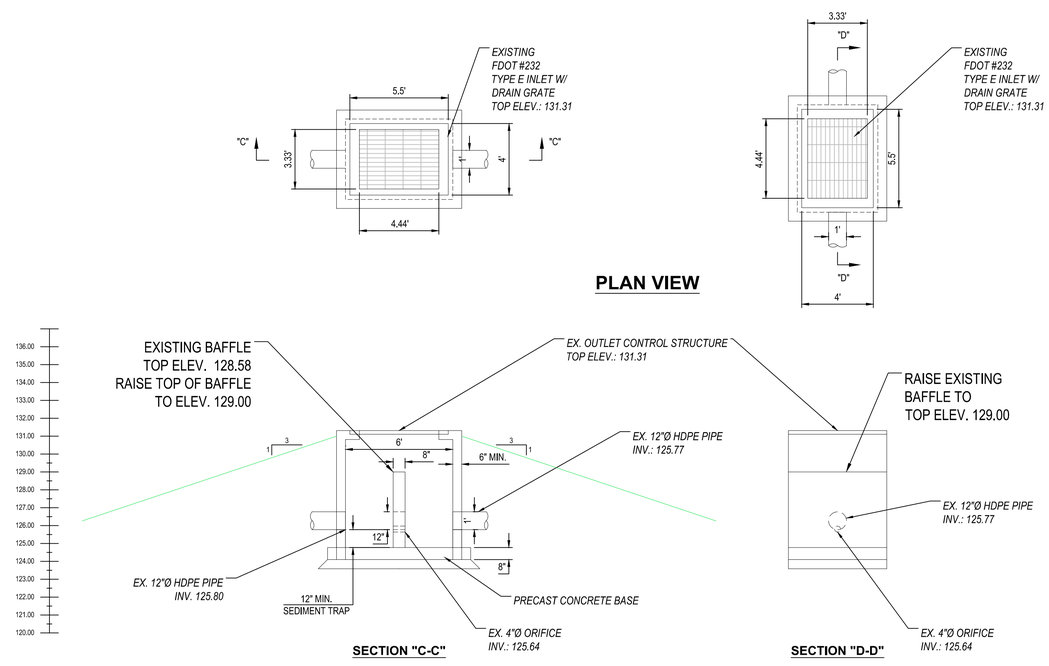

PLAN VIEW

SECTION "C-C"

SECTION "D-D"

SCHEMATIC DETAIL FOR MODIFICATION TO OUTFALL STRUCTURE

SCALE: 1" = 4'

Moore Bass CONSULTING
TALLAHASSEE ATLANTA
www.moorebass.com
25 Years 1991-2016

PROJECT NAME: Hopkins Electric Plant RICE PROJECT
CLIENT NAME: Sargent & Lundy, LLC

REVISIONS

R83.001-EMP-BASIN-JM

DATE	03/24/17
FILE #	16-304
CONTRACT #	R83.001
DRAWN BY	JM

The Drawings, Specifications and other documents prepared by Moore Bass Consulting, Inc. (MB) for this Project are instruments of MB for use solely with respect to this Project and, unless otherwise provided, MB shall be deemed the author of these documents and shall retain all common law, statutory and other reserved rights, including the copyright.

805 N. GADSDEN STREET
TALLAHASSEE, FL 32303
CERTIFICATE OF AUTHORIZATION NO. 00006108

SEAL

SHEET TITLE

REQUIRED MODIFICATION TO SWMF

SHEET

©Moore Bass Consulting

C:\Projects\R83.001\Workfiles\EMP\R83.001-EMP-BASIN-JM.dwg, GRD-DET, jjmoore, Mar 24, 2017 - 5:25:29pm

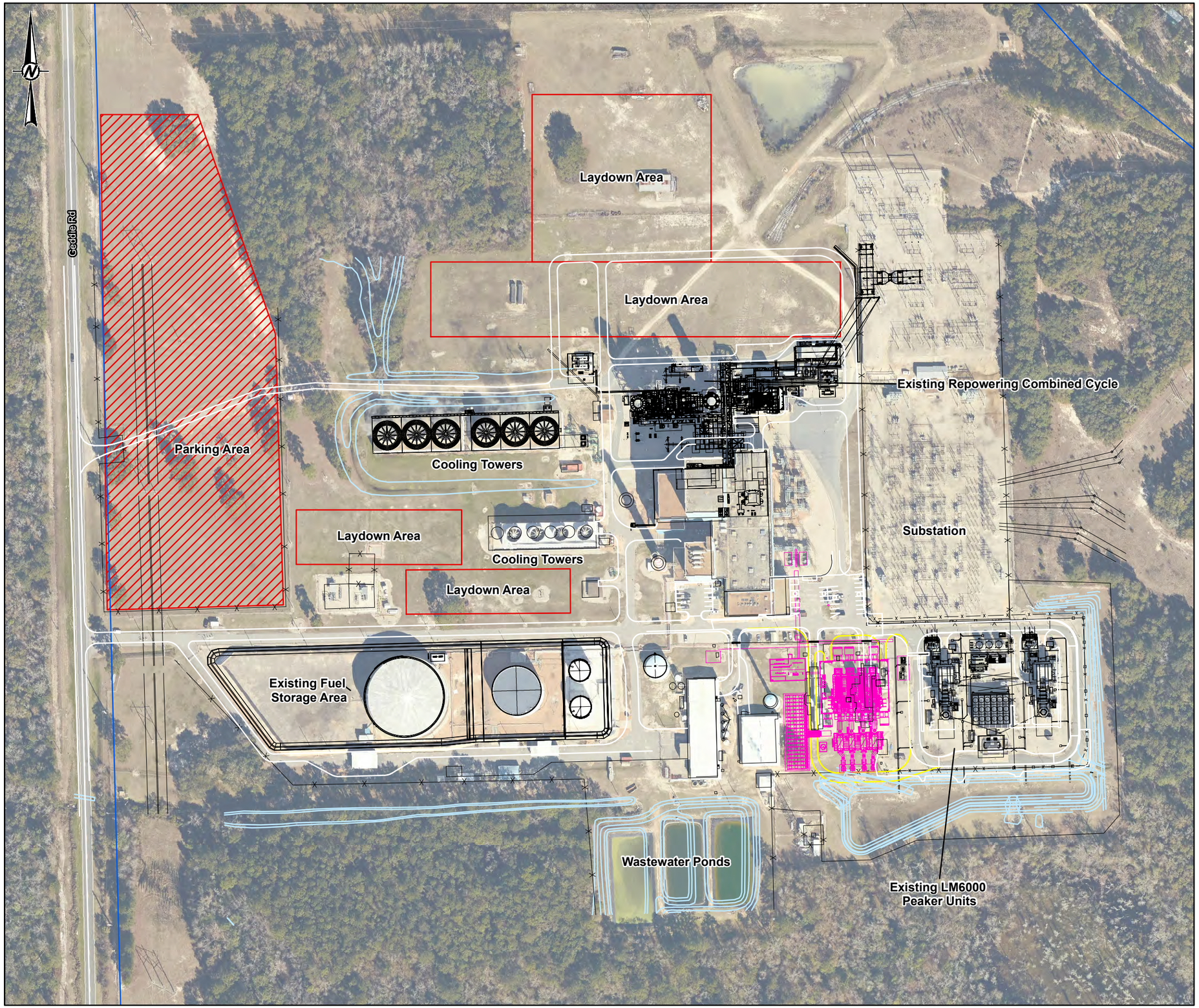

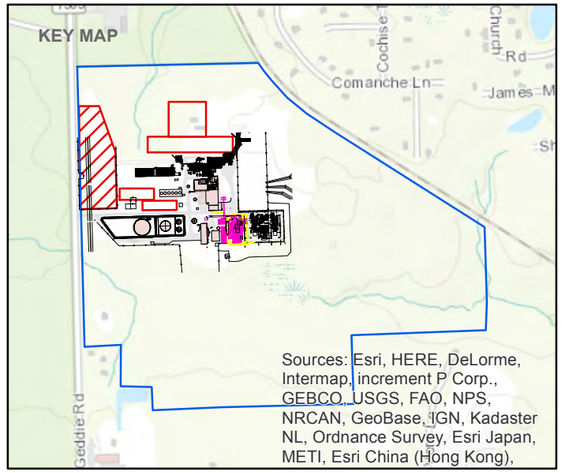

LEGEND

- Plant Boundary
- Existing Site Layout
- Proposed Site Layout
- Existing Roads
- Proposed Roads
- Stormwater
- Laydown Areas
- Parking Area

0 100 200 400

1:2,400 FEET

REFERENCE(S)

1. SITE LAYOUT, ROADS, SARGENT & LUNDY, 2017.
2. LAYDOWN AREA, PARKING AREA, CITY OF TALLAHASSEE, 2017.
3. AERIAL IMAGERY, FLORIDA DEPARTMENT OF TRANSPORTATION, 2015.

COORDINATE SYSTEM: NAD 1983 UTM ZONE 16N
PROJECTION: TRANSVERSE MERCATOR
DATUM: NORTH AMERICAN 1983

CLIENT
CITY OF TALLAHASSEE

PROJECT
HOPKINS GENERATING STATION

TITLE
CONSTRUCTION LAYDOWN AND PARKING AREAS

CONSULTANT
Golder Associates

YYYY-MM-DD	2017-03-27
DESIGNED	GFD
PREPARED	GFD
REVIEWED	SM
APPROVED	KK

PROJECT NO.	CONTROL	REV.	FIGURE
1668430	A004	0	2-3

PATH: G:\PROJECTS\City_of_Tallahassee\Hopkins_Generating_Station\99_PROJECTS\1668430_ABHopkins_Plant\1668430_A_AirModeling\02_PRODUCTION\MXD\1668430_A004_ConstructionLaydown.mxd

IF THIS MEASUREMENT DOES NOT MATCH WHAT IS SHOWN, THE SHEET SIZE HAS BEEN MODIFIED FROM: ANSI B

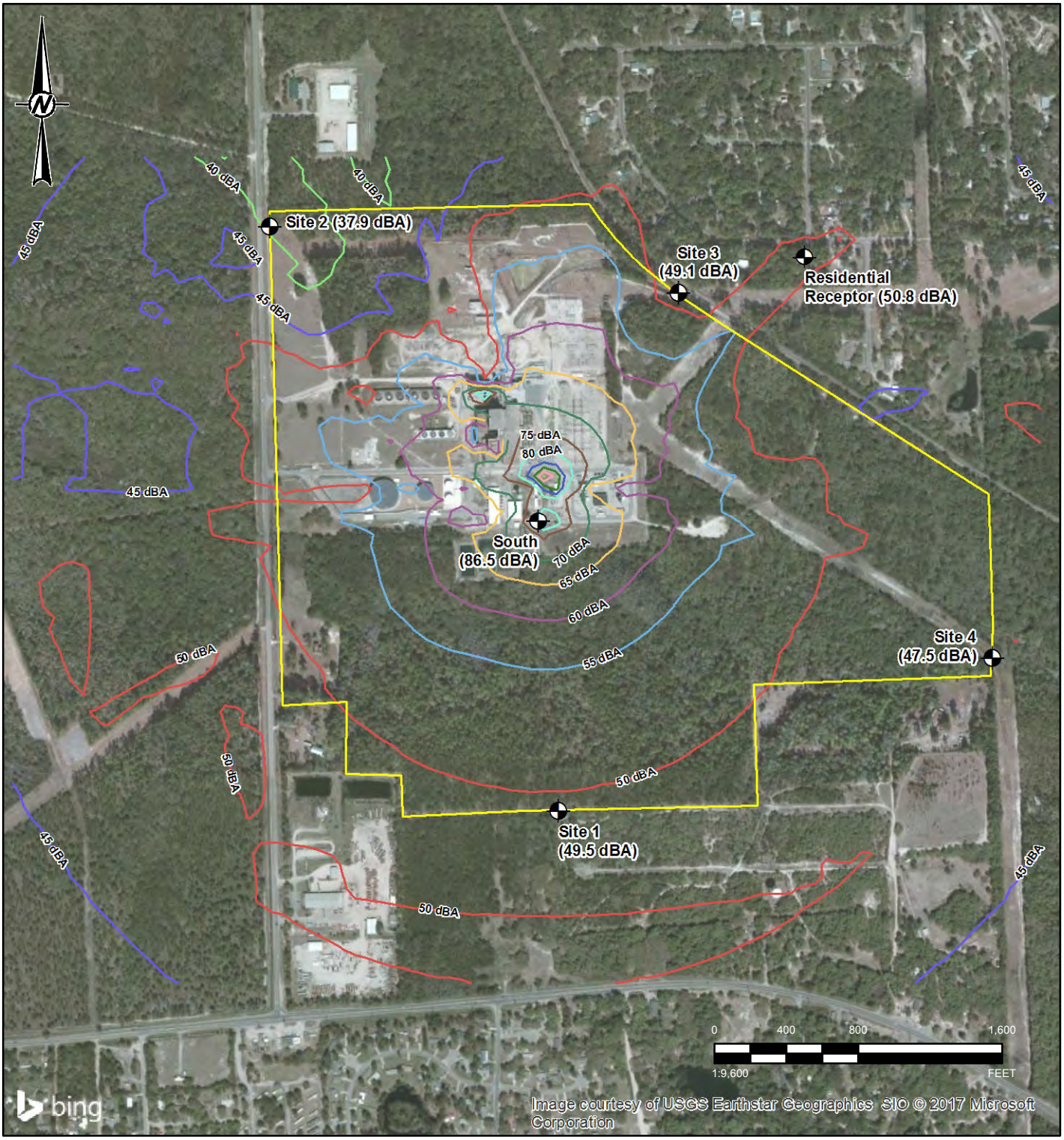

LEGEND

- Receptors
- Project Boundary

Noise Level Isopleths

- 40 dBA
- 45 dBA
- 50 dBA
- 55 dBA
- 60 dBA
- 65 dBA
- 70 dBA
- 75 dBA
- 80 dBA
- 85 dBA
- 90 dBA
- 95 dBA
- 100 dBA

REFERENCE(S)
COORDINATE SYSTEM: NAD 1983 UTM ZONE 16N
PROJECTION: TRANSVERSE MERCATOR
DATUM: NORTH AMERICAN 1983

CLIENT
CITY OF TALLAHASSEE

PROJECT
SCA MODIFICATION – RICE ENGINE PROJECT

TITLE
NOISE MODELING RESULTS

CONSULTANT
Golder Associates

YYYY-MM-DD	2017-02-22
DESIGNED	GFD
PREPARED	GFD
REVIEWED	GM
APPROVED	KK

PROJECT NO.	CONTROL	REV.	FIGURE
1668430	A002	0	3-1

PATH: G:\PROJECTS\City of Tallahassee\Hopkins Generating Station\99 PROJECTS\1668430 ABHopkins Plant\1668430 A AirModeling\02 PRODUCTION\MXD\1668430 A002 NoiseModeling.mxd
IF THIS MEASUREMENT DOES NOT MATCH WHAT IS SHOWN, THE SHEET SIZE HAS BEEN MODIFIED FROM: ANSI A
1 in
0

APPENDIX A

AIR CONSTRUCTION/PREVENTION OF SIGNIFICANT DETERIORATION PERMIT APPLICATION

REPORT

AIR CONSTRUCTION/PREVENTION OF SIGNIFICANT DETERIORATION PERMIT APPLICATION CITY OF TALLAHASSEE ARVAH B. HOPKINS ENGINE PROJECT LEON COUNTY, FLORIDA

Submitted To: City of Tallahassee
300 South Adams Street
Tallahassee, FL 32301

Submitted By: Golder Associates Inc.
6026 NW 1st Place
Gainesville, FL 32607

Distribution: COT – 2 copies
Golder – 2 copies

April 2017 **16-68430**

A world of capabilities delivered locally

Golder Associates

Golder, Golder Associates and the GA globe design are trademarks of Golder Associates Corporation

Table of Contents

1.0 INTRODUCTION 1
2.0 PROJECT DESCRIPTION, EMISSIONS AND STACK PARAMETERS 3
3.0 AIR QUALITY REVIEW REQUIREMENTS AND APPLICABILITY 5
3.1 National Ambient Air Quality Standards 5
3.2 PSD Requirements 5
3.2.1 General Requirements 5
3.2.2 Control Technology Review 6
3.2.3 Source Impact Analysis 7
3.2.4 Source Information/GEP Stack Height 8
3.2.5 Additional Impact Analysis 8
3.2.6 Air Quality Related Values 9
4.0 CONTROL TECHNOLOGY REVIEW 10
4.1 Introduction 10
4.1.1 Emission Limiting Standards [(New Source Performance Standards (NSPS) and National Emission Standards for Hazardous Air Pollutants (NESHAPS)] 10
4.1.2 Control Technology Overview 11
4.1.3 Applicability and BACT Approach 11
4.2 Non-GHG Control Technology review – BACT Analysis 12
4.2.1 VOCs 12
4.2.1.1 Previous BACT Determinations 12
4.2.1.2 Identification of Potentially Applicable Control Technologies 13
4.2.1.3 Evaluation of Technically Feasible Control Alternatives 13
4.2.1.4 Ranking of Technically Feasible Control Alternatives 14
4.2.1.5 Evaluation of Economic, Environmental, and Energy Impacts of Feasible Technologies 14
4.2.1.6 Selection of BACT and Rationale 14
4.2.2 Particulate Matter ($PM/PM_{10}/PM_{2.5}$) 15
4.2.2.1 Previous BACT Determinations 15
4.2.2.2 Identification of Potentially Applicable Control Technologies 15
4.2.2.3 Evaluation of Technically Feasible Control Alternatives 17
4.2.2.4 Ranking of Technically Feasible Control Alternatives 17
4.2.2.5 Evaluation of Economic, Environmental, and Energy Impacts of Feasible Technologies 18
4.2.2.6 Selection of BACT and Rationale 18
4.3 CO_2 BACT Evaluation 18
4.3.1 Identification of Available Control Technologies 18
4.3.2 Identification of Technically Feasible Control Alternatives 21
4.3.3 Ranking of Remaining Control Technologies 23
4.3.4 Economic, Energy, and Environmental Impacts 23

4.3.4.1 Selection of BACT 25
5.0 AMBIENT MONITORING ANALYSIS 28
6.0 AIR QUALITY IMPACT ANALYSIS 29
6.1 Air Modeling Analysis Approach – Site Vicinity 29
6.2 Air Modeling Analysis Approach – Far-Field Assessment 34
7.0 ADDITIONAL IMPACT ANALYSIS 37
7.1 Potential Impacts Due to Associated Growth 37
7.1.1 Impacts of Associated Growth 37
7.2 Potential Air Quality Effect Levels on Soils, Vegetation and Wildlife 38
7.2.1 Soils 38
7.2.2 Vegetation 38
7.2.3 Wildlife 41
7.2.4 Impact Analysis Methodology 41
7.3 Impacts on Soils, Vegetation, Wildlife, and Visibility in the Project's Vicinity 42
7.3.1 Impacts on Vegetation and Soils 42
7.3.2 Impacts on Wildlife 42
7.3.3 Visibility 43
7.4 Impacts to the Saint Marks NWA PSD Class I Area 43
7.4.1 Identification of AQRVs and Methodology 43
7.4.2 Impacts Upon Visibility 43

List of Tables

Table 2-1 Stack, Operating, and Emission Data for Each Engine Wartsila Model 18V50SG, Natural Gas
Table 2-2 Summary of Maximum Potential Annual Emissions for Each Engine Wartsila Model 18V50SG, Natural Gas
Table 2-3 Summary of PSD Applicability for Four Engines without Offsets from Unit 1 Wartsila Model 18V50SG, Natural Gas
Table 2-4 Annual Average Emissions for Arvah B. Hopkins Generating Station Boiler #1 for Each Consecutive Two-Year Period, 2012-2016
Table 2-5 PSD Applicability - Arvah B. Hopkins Generating Station - Project and Unit 1 Offsets
Table 3-1 National and State AAQS, Allowable PSD Increments, and Significant Impact Levels
Table 5-1 Summary of Maximum $PM_{2.5}$ Measurements in the Vicinity of City of Tallahassee Hopkins Plant, 2012 to 2014
Table 6-1 Structure Dimensions Used in the Modeling Analysis
Table 6-2 Summary of the $PM_{2.5}$ Sources Considered for Inclusion in the Air Modeling Analysis
Table 6-3 Summary of the $PM_{2.5}$ Sources Included in the NAAQS Modeling Analysis
Table 6-4 Maximum Concentrations Predicted for Emissions of One 18.82 MW Wartsila Engine Firing Natural Gas
Table 6-5 Summary of Maximum Concentrations Predicted for Four 18.82 MW Wartsila Engines on Natural Gas Compared to the EPA Class II SIL
Table 6-6 Maximum Predicted 24-hour $PM_{2.5}$ Impacts for All Sources Compared to the NAAQS

Table 6-7 Maximum Predicted 24-hour $PM_{2.5}$ Impacts Compared to the Allowable PSD Class II Increment
Table 6-8 Maximum Predicted Impacts for the Proposed Project Compared to EPA Class I Significant Impact Levels
Table 7-1 Examples of Reported Effects of Air Pollutants at Concentrations below National Secondary Ambient Air Quality Standards
Table 7-2 Maximum 24-hr Visibility Impairment Predicted for the Project at the ENP and CNWA PSD Class I Areas
Table 7-3 Maximum Annual Total Sulfur and Nitrogen Deposition Predicted for the Project at the ENP PSD Class I Area

List of Figures

Figure 1-1 Location of Proposed Project at the A. B. Hopkins Station
Figure 7-1 Visual Effects Screening Analysis

List of Appendices

Appendix A Performance and Emissions Information and Calculations
Appendix B Baseline Actual Information for Unit 1
Appendix C FDEP Form No. 62-210.900(1): Application for Air Permit – Long Form

List of Acronyms

4SLB	four-stroke lean burn
°C	degrees Celsius
°F	degrees Fahrenheit
AERMOD	American Meteorological Society and U.S. Environmental Protection Agency Regulatory Model
AOR	Annual Operating Report
AQRV	air quality related value
ASOS	automatic surface observing system
BACT	Best Available Control Technology
BPIP	Building Profile Impact Program
BTU	British Thermal Units
CAA	Clean Air Act
CALPUFF	California Puff (model)
CCS	carbon capture and storage
CFR	Code of Federal Regulations
CH_4	methane
CO	carbon monoxide
CO_2	carbon dioxide
CO_2e	carbon dioxide equivalent
CT	combustion turbine
DOE	Department of Energy
eGRID	Emissions and Generation Resource Integrated Database
EIA	Energy Information Administration
EPA	U.S. Environmental Protection Agency
ESP	electrostatic precipitator
F.A.C.	Florida Administrative Code
FDEP	Florida Department of Environmental Protection
FLAG	Federal Land Manager's AQRV Workgroup
FLM	Federal Land Managers
FR	Federal Register
ft	foot
GCP	Good Combustion Practices
GEP	Good Engineering Practices
GHG	greenhouse gas
HAPs	hazardous air pollutants
HFCs	hydrofluorocarbons
HHV	higher heating value
hr/yr	hours per year
HSH	highest, second highest
kg/ha/yr	kilograms per hectare per year
km	kilometer

LAER	lowest achievable emission rate
m/s	meters per second
MW	megawatt
N_2O	nitrous oxide
NAAQS	National Ambient Air Quality Standards
NERC	National Electric Reliability Council
NESHAPs	National Emission Standards for Hazardous Air Pollutants
NO_2	nitrogen dioxide
NO_x	nitrogen oxides
NSPS	New Source Performance Standards
NWA	National Wilderness Area
NWS	National Weather Service
O_2	oxygen
OAQPS	Office of Air Quality Planning and Standards
PFCs	perfluorocarbons
PM	particulate matter
$PM_{2.5}$	particulate matter less than 2.5 microns
PM_{10}	particulate matter less than 10 microns
ppmvd	parts per million volume dry
PSD	Prevention of Significant Deterioration
RBLC	RACT/BACT/LAER Clearinghouse
RICE	reciprocating internal combustion engines
SAM	sulfuric acid mist
SCR	selective catalytic reduction
SCRAM	Support Center for Regulatory Air Models
SER	significant emissions rate
SIA	significant impact area
SIL	significant impact level
SF_6	sulfur hexafluoride
SMC	significant monitoring concentrations
SO_2	sulfur dioxide
SO_4	sulfate
STEC	South Texas Electric Cooperative
TCEQ	Texas Commission on Environmental Quality
TLH	Tallahassee International Airport
TPY	tons per year
TTN	Technology Transfer Network
USDW	Underground Sources of Drinking Water
VOC	volatile organic compound
WECS	Wartsila Engine Control System
WESP	Wet Electrostatic Precipitation

1.0 INTRODUCTION

The City of Tallahassee proposes to install four 18.82 megawatt (MW) natural gas fired generating units at the Arvah B. Hopkins ("Hopkins") Generating Station located in Leon County, Florida (Figure 1-1). The four units will be Wartsilia Model 18V50SG four-cycle spark-ignition engines fired with natural gas and connected to associated electric generators (the "Project").

The Hopkins Generating Station is an existing generating facility presently comprised of two steam electric generating units (Units 1 and 2A), two Westinghouse combustion turbines (referred to as CT-1 and CT-2), two General Electric (GE) LM6000 combustion turbines (referred to as HC-3 and HC-4). Units 1, CT-1, and CT-2 have been in operation since before September 1972. HC-3 and HC-4 began operation in 2005 and the initial startup of Unit 2A (a General Electric 7FA combined cycle combustion turbine) began commercial operation on May 2, 2008. These units are authorized to operate under Title V Air Operation Permit No. 0730003-014-AV issued by the Florida Department of Environmental Protection (FDEP).

The FDEP and U.S. Environmental Protection Agency (EPA) have pre-construction review requirements for new major sources of air pollution or major modifications at existing major source facilities that exceed threshold amounts. These requirements are known as Prevention of Significant Deterioration (PSD) review. The procedures for determining applicability of the PSD permitting program to the Project are specified in FDEP Rule 62-212.400(2), Florida Administrative Code (F.A.C.). For each regulated pollutant, PSD is triggered as a result of a modification at an existing facility if the difference between the projected actual emissions and the baseline actual emissions equals or exceeds the PSD significant emission rate (SER) for that pollutant.

The City of Tallahassee plans on retiring Unit 1, which will provide emissions offsets for the four Wartsila generating units once these units are fully operational. In addition, two small combustion turbines (CT-1 and CT-2) will be retired and dismantled to make room for the new units. The installation of the Project will still have air emissions that will exceed the pre-construction review thresholds. As a result, the Project will be classified by FDEP as a major modification and will be subject to the PSD preconstruction permitting program for those pollutants that exceed the PSD SERs.

Golder Associates Inc. (Golder) has been contracted to prepare the Air Construction/PSD Application that addresses the FDEP requirements including source information, control technology review, air monitoring requirements, and an air quality impact analysis for the Project. The air quality impact analysis must demonstrate that the Project's air impacts comply with the National Ambient Air Quality Standards (NAAQS) and PSD Increments. This report is divided into seven sections.

- Section 1.0 presents an introduction to the Project
- Section 2.0 presents a description of the Project, including detailed air emissions and stack parameters necessary for air modeling impact analyses and PSD applicability

- Section 3.0 provides a summary of the PSD and regulatory review requirements applicable to the Project
- Section 4.0 includes the control technology review including a Best Available Control Technology (BACT) analysis including GHG
- Section 5.0 discusses the ambient air monitoring analysis
- Section 6.0 presents a summary of the air modeling approach and results used in assessing compliance of the Project with NAAQS and PSD Increments
- Section 7.0 presents the additional impact analysis required for PSD review
- Appendices which include emission calculations, baseline actual emissions information for Unit 1, and FDEP Form No. 62-210.900(1): Application for Air Permit – Long Form

2.0 PROJECT DESCRIPTION, EMISSIONS AND STACK PARAMETERS

The Project will consist of four Wartsila Model 18V50SG natural gas fired generators that produce 18.82 MW at 100 percent load. The Wartsila Model 18V50SG engine is the world's largest four-stroke spark-ignited gas engine. The engines are lean-burn engines with pre-chamber mixing and low peak combustion temperatures to reduce formation of nitrogen oxides (NO_x) while insuring proper combustion to minimize the emissions of carbon monoxide (CO) and volatile organic compounds (VOCs). The Wartsila Engine Control System (WECS) is designed to control each cylinder to insure optimal control and operation. Each engine will also be equipped with selective catalytic reduction (SCR) to control NO_x emissions to 5 parts per million volume-dry (ppmvd) corrected to 15 percent O_2 and oxidation catalyst to control CO emissions to 15 ppmvd corrected to 15 percent O_2. These emission rates will be over the complete range of operation (100 percent load down to 40 percent load). Estimated emissions for each Wartsila engine over the operating range for non-greenhouse gas (GHG) pollutants are presented in Table 2-1. Table 2-2 presents the maximum potential annual emissions based on six different operating loads scenarios. (Refer to Appendix A, Table A-1 through A-3, for detailed information.) Table 2-3 presents the maximum potential annual emission compared to the PSD review thresholds referred to as the SERs that are contained in in 62-210.200(256), F.A.C., and shown in Table 2-3. The maximum potential emissions of the Project were determined to be at 100 percent load and 8,760 hours per year (hr/yr) operation.

The selection of the Wartsila Model 18V50SG gas engines was based on an evaluation of the City of Tallahassee's generation needs and existing generation resources, some of which are reaching their useful life and will be retired. The advantages of the four RICE engines include, among others (City of Tallahassee, 2017-2026 Ten-Year Site Plan):

- The RICE generators are more efficient than the units that are being retired providing significant potential fuel savings.
- The RICE generators can be started and reach full load within 5 to 10 minutes. In addition, their output level can be changed very rapidly. This, coupled with the number and size of each unit, makes them excellent for responding to the changes in output from intermittent resources such as solar energy systems and may enable the addition of more solar resources in the future.
- Multiple RICE generators provide greater dispatch flexibility.
- The CO_2 emissions from the RICE generators are much lower than the units scheduled to be retired.

On June 3, 2010, EPA promulgated regulations related to PSD and Title V GHG permitting [75 Federal Register (FR) 31514-31608]. In EPA's promulgation, GHGs are defined to include an aggregate group of six GHGs: carbon dioxide (CO_2), methane (CH_4), nitrous oxide (N_2O), hydrofluorocarbons (HFCs), perfluorocarbons (PFCs), and sulfur hexafluoride (SF_6). Each of these GHGs has a specific Global Warming Potential that is calculated as "CO_2 equivalent emissions" or CO_2e that is equivalent to one ton of

CO_2. For the Project, the GHGs emitted are CO_2, CH_4, and N_2O with one ton of CH_4 equivalent to 25 tons of CO_2e and one ton of N_2O equivalent to 298 tons of CO_2e. GHGs for the Project were calculated based on the actual annual heat input and emission factors from 40 Code of Federal Regulations (CFR) 75, Appendix G for CO_2 and 40 CFR Part 98, Subpart C. Table 2-3 also presents a summary of the GHG emissions for the Project. (Refer to Appendix A, Table A-4, for detailed information.)

Because the Project involves a physical change to an existing major stationary source that will result in an increase in actual emissions, review is required to determine whether the Project constitutes a Major Modification triggering PSD requirements under Rule 62-212.400, F.A.C. PSD applicability is determined on a pollutant-by-pollutant basis and, as defined in Rule 62-210.200(169), a Major Modification occurs where there is a "significant emission increase" of a PSD pollutant and a "significant *net* emissions increase" of that pollutant that exceeds the SERs. Because this project involves the construction of new emission units (the Wartsila engines) and changes to existing units (the retirement of Unit 1 and CT-1 and CT-2), the Hybrid Test for Multiple Types of Emission Units in Rule 62-212.400(2)(a)3., F.A.C., is used to determine if there is a significant emissions increase. As defined in Rule 62.210.200(187), F.A.C., a significant *net* emissions increase is determined by accounting for all other contemporaneous and creditable increases or decreases in actual emissions. For an existing emission unit like Unit 1, the emission decreases are determined based on "baseline actual emissions" as defined in Rule 62.210.200(28), F.A.C. The "baseline actual emissions" are the emissions over a consecutive 24-month period within the 5 years immediately preceding the date that a complete application is submitted. The use of different consecutive 24-month periods for each pollutant is allowed. The net emission increase is determined from the sum of all the contemporaneous creditable increases and decreases. For new units, emission increases are based on "potential to emit" as defined in Rule 62.210.200(223), F.A.C.

As shown in Table 2-3, the maximum potential emissions of the proposed Wartsila engines exceed the PSD SERs for particulate matter (PM), particulate matter less than 10 microns (PM_{10}), particulate matter less than 2.5 microns ($PM_{2.5}$), NO_x, and VOCs. Table 2-4 summarizes the annual Unit 1 emissions reported in the annual operating reports (AORs) for each calendar year in the period 2012 through 2016. During this period Unit 1 only used natural gas as fuel with no reported use of fuel oil. The CO_2 emission rates in Tables 2-4 were obtained from EPA's acid rain database. Since emissions of N_2O and CH_4 were not reported in the AORs, they were calculated based on the actual annual heat input and emission factors from 40 CFR 98, Subpart C. Appendix B, Table B-1, B-2 and B-3 present the Unit 1 2012-2016 heat input, the 2012-2016 AOR information and the 2012-2016 GHG calculations, respectively. Table 2-5 presents the PSD applicability for the Project with the emission offsets by retiring Unit 1. As shown in Table 2-5, there are significant net emissions increases requiring PSD review for VOCs, PM, PM_{10}, $PM_{2.5}$ and GHGs. The net emissions increases for NO_x are less than the PSD significant emission rate.

3.0 AIR QUALITY REVIEW REQUIREMENTS AND APPLICABILITY

3.1 National Ambient Air Quality Standards

The existing applicable NAAQS are presented in Table 3-1. Primary NAAQS were promulgated to protect the public health with an adequate margin of safety and secondary NAAQS were promulgated to protect the public welfare from any known or anticipated adverse effects associated with the presence of pollutants in the ambient air. Areas of the country in compliance with NAAQS like Leon County are designated as attainment areas.

3.2 PSD Requirements

3.2.1 General Requirements

Under federally approved Florida PSD review requirements, all major new or modified sources of air pollutants regulated under the Clean Air Act (CAA) must be reviewed and a pre-construction permit issued.

PSD is applicable to any new "major stationary source" and "major modifications" that occur at existing major stationary sources. A major stationary source is defined as any 1 of 28 named source categories that have the potential to emit 100 tons per year (TPY) or more, or any other stationary facility that has the potential to emit 250 TPY or more, of any pollutant regulated under the CAA. "Potential to emit" means the capability, at maximum design capacity, to emit a pollutant after the application of control equipment. Net emission increases from a modification at a major stationary source that exceed the PSD SERs are also subject to PSD review.

EPA has promulgated regulations providing that certain increases above an air quality baseline concentration level of sulfur dioxide (SO_2), PM_{10}, and NO_2 concentrations would constitute significant deterioration. The EPA class designations and allowable PSD Class I and II increments are presented in Table 3-1. The nearest PSD Class I areas to the Hopkins Generating Station is the Bradwell Bay National Wilderness Area (NWA), located approximately 28 kilometers (km) southwest of the Station, and the St. Marks NWA, located about 38 km to the south and southeast. Florida has adopted the EPA class designations and allowable PSD increments for SO_2, PM_{10}, and NO_2.

PSD review is used to determine whether significant air quality deterioration will result from the new or modified facility. Florida's PSD regulations are found in FDEP Rule 62-212.400, F.A.C. Major new facilities and major modifications are required to undergo the following analysis related to PSD for each pollutant emitted in significant amounts:

1. Control technology review
2. Source impact analysis
3. Air quality analysis (monitoring)

4. Source information
5. Additional impact analyses

In addition to these analyses, a new major stationary source or major modification made to an existing major stationary source also must be reviewed with respect to Good Engineering Practice (GEP) stack height regulations. Discussions concerning each of these requirements for a new major stationary source or major modification are presented in the following sections. The federal PSD requirements have been adopted by reference in Rule 62-204.800(3)(a), F.A.C.

3.2.2 Control Technology Review

A new major stationary source or major modification must perform a control technology review, which requires that all applicable federal and state emission limiting standards be met and that BACT be applied to control emissions from the source (FDEP Rule 62-212.400, F.A.C.). The BACT requirements are applicable to all regulated pollutants for which the net emissions increase from the facility or modification exceeds the SER.

BACT is defined in FDEP Rule 62-210.200(32), F.A.C., as:

> (a) An emission limitation, including a visible emissions standard, based on the maximum degree of reduction of each pollutant emitted, which the Department, on a case-by-case basis, determines is achievable through application of production processes and available methods, systems and techniques (including fuel cleaning or treatment or innovative fuel combustion techniques) for control of each such pollutant taking into account:
>
> 1. Energy, environmental and economic impacts, and other costs,
> 2. All scientific, engineering, and technical material and other information available to the Department, and
> 3. The emission limiting standards or BACT determinations of Florida and any other State.
>
> (b) If the Department determines that technological or economic limitations on the application of measurement methodology to a particular part of an emissions unit or facility would make the imposition of an emission standard infeasible, a design, equipment, work practice, operational standard or combination thereof, may be prescribed instead to satisfy the requirement for the application of BACT. Such standard shall, to the degree possible, set forth the emissions reductions achievable by implementation of such design, equipment, work practice or operation.
>
> (c) Each BACT determination shall include applicable test methods or shall provide for determining compliance with the standard(s) by means which achieve equivalent results.
>
> (d) In no event shall application of best available control technology result in emissions of any pollutant which would exceed the emissions allowed by any applicable standard under 40 CFR Parts 60, 61, and 63.

The BACT requirements are intended to ensure that the control systems incorporated in the design of a new facility reflect the latest in control technologies used in a particular industry and take into consideration existing and future air quality in the vicinity of the new facility. BACT must, at a minimum, demonstrate

compliance with NSPS for a source (if applicable). An evaluation of the air pollution control techniques and systems, including a cost benefit analysis of alternative control technologies capable of achieving a higher degree of emission reduction than the proposed control technology, is required. The cost-benefit analysis requires the documentation of the materials, energy, and economic penalties associated with the proposed and alternative control systems, as well as the environmental benefits derived from these systems. A decision on BACT is to be based on sound judgment, balancing environmental benefits with energy, economic, and other impacts (EPA, 1978).

3.2.3 Source Impact Analysis

A source impact analysis must be performed for a new major stationary source or major modification to a major source for each pollutant, subject to PSD review, for which the net emissions increase exceed the SER (refer Table 2-5). The PSD regulations specifically provide for the use of atmospheric dispersion models in performing impact analyses, estimating baseline and future air quality levels, and determining compliance with NAAQS and allowable PSD increments. Designated EPA models that are approved by FDEP normally must be used in performing the impact analysis. Specific applications for other than EPA approved models require EPA's consultation and prior approval. Guidance for the use and application of dispersion models is presented in the EPA publication *Guideline on Air Quality Models (Revised)*. The source impact analysis for criteria pollutants to address compliance with NAAQS and PSD Class II increments may be limited to the new source if the impacts as a result of the new source are below significant impact levels, as presented in Table 3-1.

The EPA has proposed significant impact levels for Class I areas. Although these levels have not been officially promulgated as part of the federal PSD regulations and may not be binding for states in performing PSD reviews, the levels serve as a guideline in assessing a source's impact in a Class I area. FDEP has accepted the use of these significant impact levels.

Various lengths of meteorological data records can be used for impact analysis. A 5-year period can be used with corresponding evaluation of highest, second highest short term concentrations for comparison to NAAQS or PSD increments. The term "highest, second highest" (HSH) refers to the highest of the second highest concentrations at all receptors (i.e., the highest concentration at each receptor is discarded). The second highest concentration is significant because short-term NAAQS specify that the standard should not be exceeded at any location more than once a year. If fewer than 5 years of meteorological data are used in the modeling analysis, the highest concentration at each receptor normally must be used for comparison to air quality standards.

Because there are no NAAQS or PSD increments applicable to GHG emissions, these analyses are not conducted for PSD review for GHG.

3.2.4 Source Information/GEP Stack Height

Source information must be provided to adequately describe the proposed facility or major modification subject to PSD review.

The 1977 CAA Amendments require that the degree of emission limitation required for control of any pollutant cannot be affected by a stack height that exceeds GEP or any other dispersion technique. On July 8, 1985, EPA promulgated final stack height regulations (EPA, 1985a). Identical regulations have been adopted by FDEP (FDEP Rule 62-210.550, F.A.C.). GEP stack height is defined as the highest of:

1. 65 meters; or
2. A height established by applying the formula:

$$Hg = H + 1.5\ L$$

where:

Hg = GEP stack height,

H = Height of the structure or nearby structure, and

L = Lesser dimension (height or projected width) of nearby structure(s); or

3. A height demonstrated by a fluid model or field study.

"Nearby" is defined as a distance up to 5 times the lesser of the height or width dimensions of a structure or terrain feature, but not greater than 0.8 km. Although GEP stack height regulations require that the stack height used in modeling for determining compliance with NAAQS and PSD increments not exceed the GEP stack height, the actual stack height may be greater.

The stack height regulations also allow increased GEP stack height beyond that resulting from the above formula in cases where plume impaction occurs. Plume impaction is defined as concentrations measured or predicted to occur when the plume interacts with elevated terrain. Elevated terrain is defined as terrain that exceeds the height calculated by the GEP stack height formula.

3.2.5 Additional Impact Analysis

In addition to air quality impact analyses, Florida PSD regulations require analyses for applicable pollutants of the impairment to visibility and the impacts on soils and vegetation that would occur as a result of a new major stationary source or major modification subject to PSD review [FDEP Rule 62-212.400(8)(a), F.A.C.]. These analyses are required for each pollutant emitted in significant amounts (refer to Table 2-5).

Because GHG emissions will not cause visibility impairment or direct impacts to soils and vegetation, these analyses are not conducted for PSD review for GHGs.

3.2.6 Air Quality Related Values

An Air Quality Related Value (AQRV) analysis is required for projects for those pollutants undergoing PSD review to assess the potential impact on AQRVs in PSD Class I areas. AQRVs have been established for the Saint Marks NWA. The U.S. Department of the Interior in 1978 administratively defined AQRVs to be:

> *All those values possessed by an area except those that are not affected by changes in air quality and include all those assets of an area whose vitality, significance, or integrity is dependent in some way upon the air environment. These values include visibility and those scenic, cultural, biological, and recreational resources of an area that are affected by air quality.*
>
> *Important attributes of an area are those values or assets that make an area significant as a national monument, preserve, or primitive area. They are the assets that are to be preserved if the area is to achieve the purposes for which it was set aside (Federal Register, 1978).*

The AQRVs include visibility, freshwater and coastal wetlands, dominant plant communities, unique and rare plant communities, soils and associated periphyton, and the wildlife dependent on these communities for habitat. Rare, endemic, threatened, and endangered species of the NP and bioindicators of air pollution (e.g., lichens) must also be evaluated.

4.0 CONTROL TECHNOLOGY REVIEW

4.1 Introduction

The Project is subject to FDEP regulations that require an air permit prior to construction and demonstration of conformance with appropriate emission standards and PSD requirements such as control technology review. Applicable requirements for construction permits and approvals are contained in FDEP Chapters 62-4, 62-210, and 62-212, F.A.C. Applicable federal emissions standards have been adopted by reference in Rule 62-204.800, F.A.C. FDEP emission standards applicable for some sources and designated areas are set forth in Chapter 62-296, F.A.C. Provisions for certain excess emissions are contained Rule 62.210.700, F.A.C. Emission monitoring requirements that included requirement for sampling facilities are contained in Chapter 62-297, F.A.C. For the Project, the most stringent emissions standards are discussed in the following sections and include federal emission standards and those proposed as BACT.

4.1.1 Emission Limiting Standards [(New Source Performance Standards (NSPS) and National Emission Standards for Hazardous Air Pollutants (NESHAPS)]

The applicable NSPS for the Wartsila 18V50SG engines is 40 CFR Part 60, Subpart JJJJ – Standards of Performance for Spark Ignition Internal Combustion Engines (ICE). These emission standards have been adopted by reference in Rule 62-204.800(8)(b)82, F.A.C. The NSPS standards applicable to the proposed Wartsila engines are those for engines that are manufactured after July 1, 2010 with a rating greater than 500 horsepower (hp) and are spark-ignition lean burn ICE. The Wartsila engines/generators that produce 18.82 MW are equivalent to over 25,000 hp per engine. Subpart JJJJ establishes notification, emission limiting standards, maintenance plan, monitoring, reporting and record-keeping requirements for NO_x, CO, and VOCs. The emission limiting standards are (Table 1 to Subpart JJJJ):

- NO_2 – 1 grams(gr)/hp-hr or 82 ppmvd corrected to 15% O_2
- CO – 2 gr/hp-hr or 270 ppmvd corrected to 15% O_2
- VOC – 0.7 gr/hp-hr or 60 ppmvd corrected to 15% O_2

The Wartsila engines with SCR can comply with the Subpart JJJJ requirements with estimated emissions using the WECS lean-burn technology of 0.9 gr/hp-hr for NO_X and 0.8 gr/hp-hr for CO (Sutkowski, M, 2011). The VOC emissions are 2.4 gr/hp-hr and require an oxidation catalyst to achieve the Subpart JJJJ emissions limits. With the addition of SCR and oxidation catalyst, the maximum emissions for the project over the range of operating conditions (i.e., 100% load to 40% load) are:

- NO_2 – 0.05 grams(gr)/hp-hr or 5 ppmvd corrected to 15% O_2
- CO – 0.1 gr/hp-hr or 15 ppmvd corrected to 15% O_2
- VOC – 0.16 gr/hp-hr or 26 ppmvd corrected to 15% O_2

With the combination of combustion controls and SCR/oxidation catalyst, the emissions for the project will be well below the Subpart JJJJ requirements.

The applicable NESHAP for the Wartsila 18V50SG engines is 40 CFR Part 63, Subpart ZZZZ – Stationary Reciprocating Internal Combustion Engine (RICE). This NESHAP is applicable to compression ignition and spark ignition engines at a major source or minor source of Hazardous Air Pollutants (HAPs). Subpart ZZZZ establishes notification, emission standards and operating limitations, continuous compliance provisions, monitoring, reporting and record-keeping requirements. These emission standards have been adopted by reference in Rule 62-204.800(11)(b)82, F.A.C. The Wartsila Model 18V50SG is considered a four-stroke lean-burn (4SLB) stationary RICE under Subpart ZZZZ. Since the Hopkins Plant is classified as a major source of HAPS (Title V Permit No. 073003-014-AV), the emission limiting standards are (Table 2a to Subpart ZZZZ):

- Reduce CO emissions by 93 percent; or
- Limit formaldehyde concentration in the stationary RICE exhaust to 14 ppmvd or less at 15 percent O_2

The installation of the oxidation catalyst on the Wartsila engines will result in compliance with either of the Subpart ZZZZ requirements.

4.1.2 Control Technology Overview

The use of clean fuel (natural gas) and combustion controls will minimize air emissions and ensure compliance with applicable emission-limiting standards. Using clean fuels will minimize emissions of SO_2, sulfuric acid mist (SAM), $PM/PM_{10}/PM_{2.5}$ and other fuel bound contaminants. Combustion controls will minimize the formation of NOx as well as the formation of CO and VOCs. Further NO_X reduction will be achieved by SCR. For CO and VOCs, an oxidation catalyst will further reduce emissions. The combination of these techniques has been determined to represent BACT and lowest achievable emission rate (LAER) on previous projects using the Wartsila Model 18V50SG engines. The following subsections present a summary of the best available control technology and practices for the Project.

4.1.3 Applicability and BACT Approach

The PSD regulations require new major stationary sources or major modifications to existing major stationary sources to undergo a control technology review for each pollutant that may potentially be emitted above significant amounts. The CAA specifies that BACT cannot be less stringent than any applicable standard of performance under the NSPS standards. Subsection 4.2 presents the BACT analysis for non-GHG pollutants consisting of VOCs and $PM/PM_{10}/PM_{2.5}$.

The approach to the BACT analysis is based on the regulatory definitions of BACT, as well as consideration of EPA's current guidelines suggesting that a "top-down" approach be followed in BACT analyses. The

CAA and corresponding implementing regulations require that a BACT analysis be conducted on a case-by-case basis taking into consideration the amount of emissions reductions that each available emissions reducing technology or technique would achieve, as well as the energy, environmental, economic, and other costs associated with each technology or technique.

EPA has recommended since 1990 that permitting authorities use the five step "top down" BACT process to determine BACT. The top down process calls for all available control technologies for a given pollutant to be identified and ranked in descending order of control effectiveness. The permit applicant should first examine the highest ranked ("top") option. The top ranked options should be established as BACT unless the permit applicant demonstrates to the satisfaction of the permitting authority that technical considerations, or energy, environmental, or economic impacts justify a conclusion that the top ranked technology is not "achievable" in that case. If the most effective control strategy is eliminated in this fashion, then the next most effective alternative should be evaluated, and so on, until an option is selected as BACT.

EPA has broken down this "top down" process into the following five steps:

Step 1: Identify all available control technologies
Step 2: Eliminate technically infeasible options
Step 3: Rank remaining control technologies
Step 4: Evaluate most effective controls and document results
Step 5: Select the BACT

4.2 Non-GHG Control Technology review – BACT Analysis

4.2.1 VOCs

4.2.1.1 Previous BACT Determinations

As part of the BACT analysis, a review was performed of previous VOC BACT determinations for similar engines in EPA's RBLC database and permit searches for Wartsila 4SLB stationary RICE. BACT determinations issued within the last 10 years (i.e., since 2007) were identified.

From the review of previous BACT determinations, it is evident that all VOC BACT determinations for natural gas have been based on good combustion practices (GCP) and the installation of oxidation catalysts. The South Texas Electric Cooperative, Inc. (STEC) Red Gate Power Project consists of 12 Wartsila 18V50SG 4SLB engines. The VOC BACT emission limit established by the Texas Commission on Environmental Quality (TCEQ) was 0.3 grams/hp-hr. The Wolf Technology Center 1 Combined Heat and Power Plant (CHP), which consisted of three Wartsila 18V50SG engines, proposed a VOC emission limit as LAER of 26 ppmvd corrected to 15 percent O_2 and 0.286 lb/MWh. Both recent projects proposed the use of combustion control and oxidation catalyst to limit VOC emissions. The VOC emissions from the Project as provided in Table 2-1 at 4.92 lb/hr at full load with combustion controls and oxidation catalyst are equivalent

to 26 ppmvd corrected to 15 percent O_2, 0.26 lb/MWh, and 0.1 gr/hp-hr, which is below these recent similar projects.

4.2.1.2 Identification of Potentially Applicable Control Technologies

Combustion is a thermal oxidation process in which carbon and hydrogen contained in a fuel combine with oxygen in the combustion zone to form CO_2 and H_2O. Incomplete combustion occurs when there is not enough oxygen to allow the fuel to react completely to produce CO_2 and water. VOCs are a result of incomplete or partial combustion of fossil fuel. Carbon in the fuel that does not experience the required temperature or residence time will form CO or other organic compounds (e.g., VOCs) instead of being fully oxidized to CO_2. The important parameters in VOC formation are combustion temperatures, fuel residence time, and local stoichiometric ratio of fuel and air (i.e., mixing of fuel and air) while also limiting NO_2 emissions. The addition of oxidation catalyst provides downstream combustion of CO and VOCs that are a result of the combustion process.

The following control options are evaluated in the BACT analysis.

Combustion Controls

VOC emissions are generated from the incomplete combustion of carbon in the fuel and organic compounds. Optimization of the combustion chamber designs and operation practices that improve the oxidation process and minimize incomplete combustion is the primary mechanism available for lowering VOC emissions. This process is often referred to as combustion controls. The combustion system design of the WECS provides all of the factors required to facilitate complete combustion while limiting the formation of NO_x. These factors include a pre-chamber for mixing of air and fuel in the proper proportions, extended residence time, and consistent high temperatures in the combustion chamber. As a result, VOC emissions are limited while reducing the formation of NO_x.

Oxidation Catalyst

Catalytic oxidation technology is primarily designed to reduce CO emissions as well as VOC emissions. Oxidation catalysts operate at elevated temperatures (>650 ^oF). In the presence of an oxidation catalyst, excess O_2 in the exhaust reacts with VOCs to form CO_2 and water (H_2O). No chemical reagent is necessary. The oxidation catalyst is constructed with a highly porous substrate that is typically coated with a precious metal catalyst. The catalyst is designed specifically for the application to minimize backpressure and engine efficiency losses. None of the catalyst components is considered toxic and can be recycled.

4.2.1.3 Evaluation of Technically Feasible Control Alternatives

In this section, the technical feasibility of each potentially applicable control technology is assessed. Those technologies that are found to be technically infeasible will not be considered further in the BACT analysis.

Combustion Controls

Combustion controls have been applied successfully on 4SLB gas-fired engines similar to those proposed for the Project and are considered technically feasible.

Oxidation Catalyst

Oxidation catalyst technology has been applied successfully on Wartsila engines including in Florida on engines similar to those proposed for the Project and is technically feasible for the Project.

4.2.1.4 Ranking of Technically Feasible Control Alternatives

Combustion controls and oxidation catalyst are compatible technologies and are considered together in combination as the top control option for VOC; thus, a ranking is not required to establish the top technology.

4.2.1.5 Evaluation of Economic, Environmental, and Energy Impacts of Feasible Technologies

The capital and annual costs for oxidation catalyst for a Wartsila Model 18V50SG engine were estimated using EC/R Incorporated's (EC/R) Control Cost for Existing Stationary SI RICE. The EC/R analysis includes costs for installing oxidation catalysts on 4SLB gas engines and was submitted to EPA Office of Air Quality Planning and Standards (EC/R, 2010). The annualized cost for each engine is estimated to be approximately $32,600/year based on an equipment life of 10 years and an interest rate of 7 percent. The uncontrolled VOC emissions for each engine are estimated to be 99 lb/hr and 434 TPY (3.2 g/kWh from Sutkowski, 2011). The cost effectiveness is calculated to be $80.6 per ton of VOC removed for each engine ($32,600÷412 tons VOC removed). Using the VOC emissions with only combustion controls, the cost effectiveness is less than $100 per ton of VOC removed and therefore cost effective for this application. The oxidation catalyst will also remove an estimated 171 TPY of CO and 48 TPY of formaldehyde. This would lower the overall cost effectiveness of the installation of oxidation catalyst to $58 per ton of pollutant removed, while also achieving emission rates that can meet NSPS and NESHAPS requirements.

The study provided also found no energy penalties for the addition of oxidation catalyst on 4SLB engines evaluated. Since there is no reactant used in an oxidation catalyst and no significant energy losses there are no additional environmental impacts. In addition, the addition of an oxidation catalyst also significantly reduces CO emissions (90+%). An oxidation catalyst in conjunction with the WECS will also limit formaldehyde emissions. Thus, there are multiple benefits to the installation of an oxidation catalyst.

4.2.1.6 Selection of BACT and Rationale

The evaluation of the energy, environmental, and economic impacts demonstrates that an oxidation catalyst system is cost effective for the Project. Therefore, GCP and oxidation catalyst are the proposed as the technology to meet BACT emission limits for VOC with the following emissions limit: 4.92 lb/hr (equivalent to 26 ppmvd corrected to 15 percent O_2 at full and 70% load and 0.12 g/kW-hr). The equivalent emission

rate is the same VOC emission rate for the recently permitted Wartsila Model 16V34SG 4SLB gas engine with oxidation catalyst rated at 7.4 MW to be installed by Gainesville Regional Utilities at the UF/Shands Hospital Complex (FDEP Project No. 0010129-006-AC).

4.2.2 Particulate Matter ($PM/PM_{10}/PM_{2.5}$)

4.2.2.1 Previous BACT Determinations

A small amount of $PM/PM_{10}/PM_{2.5}$ emissions, collectively referred to as "PM" will result from the combustion of pipeline quality natural gas. PM emissions from combustion of natural gas are inherently low. NSPS Subpart JJJJ, which specifies performance standards for stationary 4SLB ICE, does not set any PM emissions limits.

As part of the BACT analysis, a review was performed for previous BACT determinations within the last 10 years for PM emissions from large gas fired ICE engines (>500 hp) in EPA's RBLC web page. The dominant BACT for $PM/PM_{10}/PM_{2.5}$ is the use of clean fuels and GCP. The STEC Red Gate and Wolf Technology Center 1 CHP project that utilize the Wartsila 18V50SG 4SLB ICE engines both recognize clean fuels and GCP as BACT.

From the review of previous BACT determinations, it is evident that all PM BACT determinations are based on GCP and the use of natural gas. Add-on PM control technologies were not selected as BACT for any of the determinations.

4.2.2.2 Identification of Potentially Applicable Control Technologies

PM is the general term for a mixture of solid particles and liquid droplets present in the emissions stream. PM emissions from turbines primarily result from carryover of noncombustible trace constituents in the fuel. PM emissions can be classified as "filterable" or "condensable" PM. Filterable PM is that portion of the total PM that exists in the stack in either the solid or liquid state. Condensable PM is that portion of the total PM that exists as a gas in the stack but condenses in the cooler ambient air to form particulate matter. Condensable PM is composed of organic and inorganic compounds and is generally considered to be all less than 1.0 micron in aerodynamic diameter.

PM emissions that are less than 10 microns in diameter are referred to as PM_{10}. $PM_{2.5}$ is PM emissions that are less than 2.5 microns in diameter. All PM_{10} emissions are considered to be $PM_{2.5}$. The following control options are evaluated in the PM BACT analysis:

Good Combustion Practices (GCP)

PM emissions from natural gas combustion are inherently low, and combustion controls can further minimize the amount of PM emissions generated due to incomplete combustion. Optimization of the combustion chamber designs and operation practices that improve the oxidation process and minimize

incomplete combustion are the primary mechanisms available for lowering PM emissions. This is often referred to as "good combustion practices." Good combustion practices are inherent in modern Wartsila 18V50SG engines with WECS.

Clean Fuel

One mechanism for the formation of particulate is the oxidation of sulfur compounds, which can precipitate as PM in the exhaust stream. The proposed engines will burn pipeline-quality natural gas. Natural gas contains very low levels of sulfur; thus, emissions of sulfur and the resulting PM are minimized through the use of these clean-burning fuels.

Fabric Filter Baghouse

A fabric filter baghouse removes particles and condensed metals from a flue gas stream by drawing dust-laden flue gas and condensables through a bank of filter tubes suspended in a housing. A filter cake, composed of the removed particulate, builds up on the "dirty" side of the bag. Periodically, the cake is removed through physical mechanisms (i.e., blast of compressed air from the clean side of the bag, mechanical shaking of the bags, etc.), which causes the cake to fall. The dust is then collected in a hopper and removed.

Electrostatic Precipitator

An electrostatic precipitator (ESP) removes dust or other fine particles from a flue gas stream by charging the particles inductively with an electric field and then attracting the particles to highly charged collector plates, from which they are removed. An ESP consists of a hopper-bottomed box containing rows of plates forming passages through which the flue gas flows. Centrally located in each passage are emitting electrodes energized with a high-voltage, negative polarity direct current. The voltage applied is high enough to ionize the gas molecules close to the electrodes, resulting in a corona current of gas ions from the emitting electrodes across the gas passages to the grounded collecting plates. When passing through the flue gas, the charged ions collide with, and attach themselves to, fly ash particles suspended in the gas. The electric field forces the charged particles out of the gas stream towards the grounded plates, and there they collect in a layer. The plates are periodically cleaned by a rapping system to release the ash layer into ash hoppers as an agglomerated mass.

Wet Electrostatic Precipitator

A wet electrostatic precipitator (WESP) operates in the same three-step process as a dry ESP: charging, collection, and removal. Unlike with a dry ESP, however, with a WESP the removal of particles from the collecting electrodes is accomplished by washing the collection surface using liquid, rather than mechanically rapping the collector plates. WESPs are more widely used in applications where the gas stream has a high moisture content, is below the dew point, or includes "sticky" particulate.

Wet Scrubber

Wet scrubbers trap suspended particles by direct contact with a spray of water or other liquid. In effect, a scrubber washes the particulates out of the dirty airstream as they collide with and are entrained by the tiny droplets in the spray. Several configurations of wet scrubbers are in use. In a spray-tower scrubber, an upward-flowing airstream is washed by water sprayed downward from a series of nozzles. The water is re-circulated after it is sufficiently cleaned to prevent clogging of the nozzles. In orifice scrubbers and wet-impingement scrubbers, the air and droplet mixture collides with a solid surface. Collision with a surface atomizes the droplets, reducing droplet size and thereby increasing total surface contact area. These devices have the advantage of lower water-recirculation rates.

Scrubber efficiency depends on the relative velocity between the droplets and the particulates. Venturi scrubbers achieve high relative velocities by injecting water into the throat of a venturi channel-a constriction in the flow path through which particulate-laden air is passing at high speed. As a result, Venturi scrubbers are the most efficient of the wet collectors.

4.2.2.3 Evaluation of Technically Feasible Control Alternatives

Technical feasibility of the potential control options is evaluated below. Those technologies that are found to be technically infeasible will not be considered further in the BACT analysis.

Good Combustion Practices

Good combustion practices to minimize incomplete combustion are inherent in the Wartsila design and control system. GCP is typically employed to operate the RICE at optimum design conditions. GCP is considered technically feasible.

Clean Fuel

Natural gas is available and feasible for use in the Project.

Add-On Controls

Add-on control devices [including fabric filtration, ESP, wet ESP (WESP), and wet scrubbers] are not technically feasible for the Wartsila engines because of exhaust conditions, fine particulate distribution, and inherently low uncontrolled PM emission rates. Consistent with this position and based on the information in EPA's RBLC database, no large gas-fired ICE has been equipped with an add-on control device.

4.2.2.4 Ranking of Technically Feasible Control Alternatives

GCP and the use of pipeline-quality natural gas are the only feasible PM control technologies for the Project. These technologies are compatible control strategies and, considered together, they present the best control option for minimizing PM. A ranking is therefore, not required to establish the top technology.

4.2.2.5 Evaluation of Economic, Environmental, and Energy Impacts of Feasible Technologies

The use of GCP and clean fuels are recognized to result in the lowest economic, environmental and energy impacts in reducing emissions of PM.

4.2.2.6 Selection of BACT and Rationale

Based on the identification and technical evaluation of the available control technologies, the proposed BACT for PM emissions from the Project is the work practice standard of using GCP and clean fuel (natural gas). The proposed BACT emissions limits are consistent with previous BACT emissions limits.

4.3 CO_2 BACT Evaluation

EPA issued guidance on the determination of BACT for GHGs ("*PSD and Title V Permitting Guidance for Greenhouse Gases,*" March 2011). EPA believes, in BACT reviews of GHGs, that the "top down" approach should be followed, but that it is important to consider options that improve the overall energy efficiency of the source or modification through technologies, processes, and practices at the emitting unit. In general, a more energy-efficient technology burns less fuel than a less energy-efficient technology on a per-unit-of-output basis. Thus, considering the most energy-efficient technologies in the BACT analysis helps reduce the products of combustion, which includes not only GHGs but other regulated New Source Review (NSR) pollutants (e.g., NO_X, SO_2, PM/PM_{10}/$PM_{2.5}$, CO, etc.). Thus, EPA emphasizes that energy efficiency should be considered in BACT determinations for all regulated NSR pollutants (not just GHGs).

The following subsections provide the BACT analysis for the Project.

4.3.1 Identification of Available Control Technologies

The first step in the top down BACT process is to identify all "available" control options. Available control options are those air pollution control technologies or techniques (including lower emitting processes and practices) that have the potential for practical application to the emissions unit and the regulated pollutant under evaluation.

EPA has placed potentially applicable control alternatives identified and evaluated in the BACT analysis into the following three categories:

- Inherently Lower Emitting Processes/Practices/Designs
- Add-On Controls
- Combinations of Inherently Lower Emitting Processes/Practices/Designs and Add-On Controls

EPA recommends that the BACT analysis should consider potentially applicable control techniques from all of the above three categories.

GHGs under EPA regulations are considered as a single air pollutant, which is the aggregate group of the six principal gases, CO_2, N_2O, CH_4, HFCs, PFCs, and SF_6. CO_2 emissions result from the oxidation of carbon in the fuel. CH_4 emissions result from incomplete combustion and N_2O emissions result primarily from the temperature of combustion. CO_2, N_2O, and CH_4 are the GHGs that will be emitted from the Project.

EPA recommends that permit applicants and permitting authorities should identify all "available" GHG control options that have the potential for practical application to the source under consideration. In its PSD and Title V Permitting Guidance for GHGs, EPA emphasizes two mitigation approaches for CO_2: 1) energy efficiency and 2) carbon capture and storage (CCS).

The GHG emissions from the Project will also include CH_4. However, any emissions of CH_4 will be minimized using an oxidation catalyst system.

Clean Fuels

The combustion of natural gas has the lowest emissions of GHGs of any fossil fuel and emits almost 30 percent less CO_2 than oil, and about 45 percent less CO_2 than coal (source: www.naturalgas.org). The fuel for the Wartsila engines will be natural gas. It is important to recognize that the definition of BACT in 40 CFR 52.21(b)(12) includes use of "clean fuels" as a pollution control technique. The EPA PSD and Title V Permitting Guidance for GHGs states that clean fuels which would reduce GHG emissions should be considered while recognizing at the same time that the BACT analysis does not need to include a clean fuel option that would fundamentally redefine the source. Therefore, the Project will utilize "clean fuels" as included in the definition for BACT in the CAA Part 169(3).

Energy Efficiency

Energy efficiency falls under the general category of lower polluting processes/practices. Applying technologies, measures and options that are energy efficient translates not only in the reduction of emissions of the particular regulated NSR air pollutant undergoing BACT review, but it also may achieve collateral reductions of emissions of other pollutants. There are different categories of energy efficient improvements:

- Technologies or processes that maximize the efficiency of the individual emissions unit
- Options that could reduce emissions by improving the utilization of thermal energy and electricity that is generated and used onsite

When the efficiency of the power generation process is increased, less fuel is burned to produce the same amount of electricity. This provides the benefits of lower fuel costs and reduced air pollutant emissions (including CO_2).

Carbon Capture and Storage (CCS)

CCS falls under the category of add-on controls, which are air pollution control technologies that remove pollutants from a facility's emissions stream. EPA suggests that CCS is an add-on pollution control technology that is "available" for large CO_2 emitting facilities including fossil fuel-fired power plants and industrial facilities with high purity CO_2 streams. As a result, EPA suggests that CCS be considered in Step 1 of the BACT analysis.

CCS is composed of three main components: CO_2 capture and/or compression, transport, and storage.

Carbon Capture – Before CO_2 gas can be sequestered, it must be captured as a relatively pure gas, so that it can be feasibly stored. Most power plants and other large point sources use air-fired combustors, a process that exhausts CO_2 diluted with nitrogen. Flue gas from natural gas contains only about five percent CO_2 by volume. For effective carbon sequestration, the CO_2 in the exhaust gases must be separated and concentrated due to the low percent by volume.

The most likely options currently identifiable for CO_2 separation and capture include:

- Absorption (chemical and physical)
- Adsorption (physical and chemical)
- Low temperature distillation
- Gas separation membranes
- Mineralization and biomineralization

Carbon Transport – After the CO_2 is captured, it must be transported to a carbon sequestration site. Pipelines are the most common method for transporting large quantities of CO_2 over long distances. Shipping CO_2 via pipeline involves compressing gaseous CO_2 to a pressure above 1,160 pounds per square inch (psi), to increase CO_2 density and make it easier and less expensive to transport. A CO_2 pipeline would be similar to a high pressure natural gas pipeline and is technically possible. CO_2 also can be transported as a liquid in seagoing vessels or via tankers on roads or railways. In these instances, the CO_2 is held in insulated tanks at low temperatures and relatively low pressures.

Carbon Storage – In a CCS system, CO_2 is captured, it is transported, if necessary, and then stored. Geologic formations such as depleted oil and gas reservoirs, unmineable coal seams, and underground saline formations are potential options for long term storage. Pressurized CO_2 is injected into the deep geologic formations through drilled wells. Under high pressure, CO_2 turns to liquid and can move through a formation as a fluid. Once injected, the liquid CO_2 tends to be buoyant and will flow upward until it encounters a barrier of non-porous rock, which can trap the CO_2 and prevent further upward migration. When CO_2 is injected into a coal seam, it is adsorbed onto the coal surfaces, and methane gas is released

and produced in adjacent wells. There are other mechanisms for CO_2 trapping as well: CO_2 molecules can dissolve in brine, react with minerals to form solid carbonates, or adsorb in the pores of the porous rock.

Deep saline formations, which are layers of porous rock saturated with brine, present an enormous potential for geologic storage of CO_2. However, there is not much experience with saline formations such as that acquired through resource recovery from oil and gas reservoirs and coal seams. There is ongoing research focused on storage in organic rich shale, which is a thin horizontal layer of sedimentary rock with low vertical permeability and in basalt formations, which are geologic formations of solidified lava. Other possible options include liquid storage in deep ocean areas.

Oxidation Catalyst

Catalytic oxidation technology, which is primarily designed to reduce CO emissions, will also reduce CH_4 emissions but to a lesser extent. Oxidation catalysts operate at elevated temperatures where excess O_2 in the exhaust reacts with CH_4 to form CO_2. As a result, 25 lb of CO_2e are reduced to 2.75 lb of CO_2. The project proposes the use of an oxidation catalyst to control CO and VOCs and is required to meet emission limits in 40 CFR Subpart ZZZZ. The oxidation catalyst will also minimize emission of CH_4.

4.3.2 Identification of Technically Feasible Control Alternatives

Under the second step of the top down BACT analysis, a potentially applicable control technique listed in Step 1 may be eliminated from further consideration if it is not technically feasible for the specific source under review. EPA considers a technology to be potentially applicable if it has been demonstrated in practice or is available.

Energy Efficiency

Efficient power generation is technically feasible and is being proposed for the Project. This is discussed in detail in Step 4.

CCS

In its PSD and Title V permitting guidance for GHGs, EPA states that it does not believe CCS will be a technically feasible BACT option in certain cases at this time. To establish that an option is technically feasible, the permitting record should show either that an available control option has been demonstrated in practice or is available and applicable, with the term “applicable” generally meaning a technology can reasonably be installed and operated on the source type under consideration. EPA recognizes the significant logistical hurdles that the installation and operation of a CCS system presents and that set it apart from other add-on controls that are typically used to reduce emissions of other regulated pollutants. In addition, other add-on controls typically have an existing accessible infrastructure in place to address waste disposal and other offsite needs. It should also be noted that while CCS may be available according

to EPA, it is not "commercially available." All current CCS projects for power plants are primarily in the demonstration stage.

Logistical hurdles for CCS may include obtaining contracts for offsite land acquisition (including the availability of land), the need for funding (including, for example, government subsidies), timing of available transportation infrastructure, developing a site for secure long-term storage and environmental permitting for underground GHG sequestration. Not every source has the resources to overcome the offsite logistical barriers necessary to apply CCS technology to its operations.

There are no CCS systems commercially available for full-scale power plants in the United States. On February 3, 2010, President Obama established an Interagency Task Force on Carbon Capture and Storage, composed of 14 Executive Departments and Federal Agencies. The Task Force delivered several recommendations to the President on August 12, 2010. The Task Force, co-chaired by the U.S. Department of Energy (DOE) and the EPA, recommended a comprehensive and coordinated strategy to overcome the barriers to the widespread, cost effective deployment of CCS within ten years, with a goal of bringing five to ten commercial demonstration projects online by 2016. These projects, to be deployed with the help of federal funding, are intended to demonstrate a range of current generation CCS technologies applied to coal-fired power plants and industrial facilities. The Task Force concluded that such research and development efforts were designed to reduce the cost of CCS and facilitate cost-effective deployment after 2020. However, widespread deployment of CCS will occur only if the technology is commercially available at economically competitive prices. Therefore, the application of CCS is very much in the development stage and not commercially available.

In November 2010, EPA published the final rule for Federal requirements of Underground Injection Control (UIC) for CO_2 Geologic Sequestration (GS) Wells, as authorized by the Safe Drinking Water Act (SDWA). The final rule establishes new federal requirements for the underground injection of CO_2 for the purpose of long-term underground storage, or GS, and a new well class – Class VI – to ensure the protection of underground sources of drinking water (USDWs) from injection-related activities. Therefore, authorization must be obtained from FDEP under this federally delegated program prior to GS. Permitting for a Class VI well takes many years as exploratory wells are likely required for CO_2 sequestration, including drilling deep holes, testing, etc., prior to approval of an injection well. Indeed, the exploratory well process to assess the formation can take over two years for drilling, testing, and approval of the start of an injection well process.

Based on these considerations, it can be reasonably concluded that CCS is not applicable to the Project, and consequently not technically or economically feasible.

Oxidation Catalyst

Catalytic oxidation is an available control technology for CH_4, although no approval for its use for this purpose has occurred. The oxidation catalyst will reduce CH_4 with the following reaction:

$$CH_4 + 2O_2 \rightarrow CO_2 + 2H_2O$$

The addition of an oxidation catalyst for the control of CO and VOC emissions to the Project will reduce CH_4. While CH_4 emissions can be reduced using an oxidation catalyst, the amount of total CO_2e reduced is low and would not be a significant reduction compared to energy efficiency.

4.3.3 Ranking of Remaining Control Technologies

After the list of all available controls is narrowed down to a list of the technically feasible control technologies in Step 2 above, Step 3 of the top down BACT process calls for the remaining control technologies to be listed in order of overall control effectiveness for the regulated NSR pollutant under review. The most effective control alternative (i.e., the option that achieves the lowest emissions level) should be listed at the top and the remaining technologies ranked in descending order of control effectiveness.

Based on the discussion in Steps 1 and 2, the only technically feasible control option for GHGs is energy efficiency.

4.3.4 Economic, Energy, and Environmental Impacts

Under Step 4 of the top down BACT analysis, economic, energy, and environmental impacts must be evaluated for each option remaining under consideration.

The “top” control option and in the case of GHG the “top” energy reduction technology should be established as BACT unless the applicant demonstrates, and the permitting authority agrees, that the energy, environmental, or economic impacts justify a conclusion that the most stringent technology is not “achievable” in that case. If the most stringent technology is eliminated in this fashion, then the next most stringent alternative is considered, and so on.

The “top” control option is energy efficiency and using natural gas. Natural gas has the lowest GHG emissions of any fossil fuel.

The efficiency of the generation technology in producing electricity in an amount necessary to meet demands and fuel utilized are the most important aspects in GHG emissions from electric generation projects. Together, efficiency, fuel type and operational dispatch/cycling dictate the amount of GHG emissions per unit of generation.

The measure of the efficiency for an electrical generating facility is the units' heat rate. Heat rate is a measurement of how efficiently a unit uses heat energy. It is expressed as the number of British thermal units (Btu) of heat required to produce a kilowatt-hour of energy based on higher heat value (HHV). A heat rate of 3,413 Btu/kWh reflects an efficiency of 100 percent from thermal energy to electrical energy.

The proposed Wartsila units' heat rate and energy efficiency were compared to data obtained from the U.S. Energy Information Administration (EIA). Based on data provided in the Annual Energy Review 2012, the approximate heat rate for electricity for fossil fueled power plants in the U.S. in 2011 was 9,756 Btu/kWh net (HHV) (35.0 percent efficiency) (http://www.eia.gov/totalenergy/data/annual/showtext.cfm?t=ptb1206)

Based on US EIA's 2014 annual review of the electrical power industry, the reported average net heat rate (HHV) for natural gas firing was 8,185 Btu/kWh net (HHV) (41.7 percent efficiency) including all types of generation (http://www.eia.gov/electricity/annual/html/epa_08_02.html). Of the generation types, the average tested heat rates when firing natural gas are:

- Steam turbine generator – 10,354 Btu/kWh (HHV-net) (33.0 percent efficiency),
- Natural gas turbine – 11,371 Btu/kWh (HHV-net) (30.0 percent efficiency),
- Internal combustion – 9,573 Btu/kWh (HHV-net) (35.7 percent efficiency), and
- Combined cycle – 7,667 Btu/kWh (HHV-net) (44.5 percent efficiency).

The average base heat rate of a Wartsila 18V50SG engine is 8,168 Btu/kWh (HHV) based on average ambient air temperature of 105ºF (41.8 percent efficiency).

As part of EPA's clean energy initiatives, EPA developed the Emissions and Generation Resource Integrated Database (eGRID) as a resource tool in assessing GHG emissions. eGrid is a comprehensive source of data on the environmental characteristics of almost all electric power generated in the United States with data available based on a variety of geographic regions and locations. Data is also available for units, plants, power control areas (system), states, National Electric Reliability Council (NERC) regions and subregions, and the U.S. Based on the latest available eGrid data, the following are the emissions of CO_2 on a generation basis for generation facilities located in the same subregion as the project (accessed 1/27/17: https://www.epa.gov/energy/emissions-generation-resource-integrated-database-egrid; gross heat rate as HHV):

- Florida – 1,110 lb CO_2/MWh gross (HHV) for all generation (including nuclear); 1,259 lb CO_2/MWh for total combustion generation.
- United States – 1,143 lb CO_2/MWh for all generation (including nuclear); 1,651 lb CO_2/MWh gross (HHV) for total combustion generation.

The Wartsila Model 18V50SG gas engine also has advantages over other generation options such as gas turbines. The heat rate for the Wartsila engines does not change with ambient temperature and remains relatively constant over the load range.

When firing natural gas, the GHG emissions for the Wartsila 18V50SG at baseload, and new and clean condition is expected to be 972 lb CO_2/MWh (gross, HHV) based on an average an average base heat rate of 8,168 Btu/kWh (gross, HHV) and ambient air temperature of 105ºF. The heat rate for the Wartsila engines is about 29 percent lower than the heat rate for Unit 1 that averaged 11,460 Btu/kWh based on EPA Acid Rain Database for the years 2012 through 2016.

4.3.4.1 Selection of BACT

In Step 5 of the BACT determination process, the most effective control option not eliminated in Step 4 should be selected as BACT for the pollutant and emissions unit under review and included in the permit.

Energy efficiency, the only remaining and feasible control technology, is selected as BACT for the GHG emissions from the Project. Energy efficiency plays a major role in affecting GHG emissions and EPA suggests that more emphasis will be given to energy efficiency in GHG BACT analysis. As demonstrated in the discussion in Step 4, the Project meets the requirements of energy efficiency under EPA's GHG BACT guidelines.

The CCS option was eliminated in Step 2 as not technically feasible for the Project. Although EPA considers CCS as available, it is not commercially available. Indeed, EPA recognizes that at present CCS is an expensive technology, largely because of the costs associated with CO_2 capture and compression as supported by EPA's recent GHG NSPS for electric utility units. In the Guidance, EPA states that even if not eliminated in Step 2 of the BACT analysis, on the basis of the current costs of CCS, CCS would be eliminated from consideration in Step 4 of the BACT analysis, even in some cases where underground storage of the captured CO_2 near the power plant is feasible. In the case of the Project, CCS is not a technically or economically feasible control technology based on the current status of this technology.

The proposed BACT for GHG is 1,110 lb CO_2e/MWh (Gross Output) based the range of operating conditions and performance and degradation margins. The performance is based on data provided by Wartsila over the operating range of 100 percent, 70 percent and 40 percent load.

Category	Units	Estimated Performance		
Fuel		Gas	Gas	Gas
Temperature	degree F	105	105	105
Gross Load	%	100%	70%	40%
Gross Heat Rate	Btu/kWh (HHV)	8,168	8,587	9,413
Gross Efficiency	%	41.8%	39.7%	36.3%

Category	Units	Estimated Performance		
CO_2e	lb CO_2e/MWh	972	1,022	1,120
Operation		33%	33%	33%
Gas Average CO_2e	lb CO_2e/MWh	1,038	(Average of 100%, 70% and 50% load)	
Performance and Engine Margin	%	2%	(Startup Margin and engine differences)	
Degradation Margin	%	5%	(Account for normal wear during operation)	
Proposed CO_2e	lb CO_2e/Mwh	1,110	12-month Rolling Average (Gross Output)	

The proposed BACT is similar to the STEC Red Gate Power Project that consisted of 12 Wartsila 18V50SG engines. EPA Region 6 established a BACT limit of 1,145 lb/MWh on a 12-month rolling basis (PSD-TX-1322-GHG). In responding to public comment on the issuance of this permit, EPA determined that the Wartsila engines "are more energy efficient and lower GHG-emitting than simple cycle turbines". EPA also determined "that the proposed RICE can achieve an output based BACT limit of 1,145 lb of CO_2/MWh (gross) during all hours of operation including startups and shutdowns" and "operate at times with an operating range load as low as 40% of the total plant, but has also indicated they may be required to turndown generation to as little as 10MW to the grid (a little less than 5% of full load capability of the proposed plant)." This operation profile is similar to that proposed for this Project. While the Wartsila engines are less efficient than a combined cycle unit, EPA found that combined cycle units "generally cannot maintain high thermal efficiency over the load curve range." Moreover, with regard to the Wartsila engines, EPA found that "from an efficiency perspective, the proposed RICE have the highest efficiency over the proposed operating load range and also meet the turndown requirements for the plant." (See South Texas Electric Cooperative, Inc. – Red Gate Power Plant Prevention of Significant Deterioration Permit for Greenhouse Gas Emissions PSD-TX-1322-GHG, Response to Public Comments, U.S. Environmental Protection Agency, February 2015.) The project was also approved for an equivalent of 5,650 hours per year per engine, much higher than simple cycle CT.

EPA's RACT/BACT/LAER Clearinghouse (RBLC) was also reviewed for determinations of BACT for GHGs from large natural gas fired RICE (>500 hp). While the majority of the projects are for emergency generators, large natural gas compressor engines are similar to the operating requirements of the Project (fast start, consistent power over the load range and long periods of continuous operation). These BACT determinations establish CO_2e emissions and efficiency limits for the horsepower produced by the engines since no electric power is produced. A summary of the determinations in the RBLC are contained below and compared to the proposed BACT limit for the Project:

- Cameron Interstate Pipeline LLC. (RBLC ID: LA-0292) – 12 - 5,000 hp Waukesha 16V-27GL compressor engines. BACT equivalent to 0.97 lb CO_2e/hp. <u>Project's Wartsila Engines: 0.78 lb CO_2e/hp.</u>

- Nuevo Midstream LLC. (RBLC ID: TX-0746) – 5 – 3,500 hp Caterpillar G3612LE compressor engines. BACT equivalent to 585 g CO_2e/hp. Project's Wartsila Engines: 352 g CO_2e/hp.
- Markwest Buffalo Creek Gas Co LLC. (RBLC ID: OK-0148) – 1,775 hp compressor engines. BACT equivalent to 7,900 Btu/hp-hr. Project's Wartsila Engines: 6,091 BTU/hp-hr.
- Atlas Pipeline Midcontinent Westok, LLC. (RBLC ID: TX-0746) – 3 – 3,500 hp Caterpillar G3612LE compressor engines. BACT equivalent to 7,116 Btu/hp-hr. Project's Wartsila Engines: 6,091 BTU/hp-hr.

The Project's proposed use of the Wartsila 18V50SG natural gas fired RICE engine is clearly more efficient with lower CO_2 emissions per engine hp than the large natural gas RICE in EPA's RBLC. It is also noted that the proposed BACT for the Project is about 20 percent lower than the GHG BACT limit of 1,372 lb CO_2e/MWh established for Lauderdale Peaker Project that uses General Electric's most efficient 200 MW+ simple cycle 7F.05 combustion turbines (FDEP Project 0110037-013-AC/PSD-FL-423A).

5.0 AMBIENT MONITORING ANALYSIS

Based on the net emission changes from the proposed Project (see Table 25), pre-construction ambient monitoring analyses for PM_{10}, $PM_{2.5}$, and O_3 (based on NO_X or VOC emissions) may be required as part of the PSD application. Ambient monitoring analyses are not required if it can be demonstrated that the Project's maximum air quality impacts will not exceed the PSD significant monitoring concentrations (SMC) and, for O_3, the Project's potential emissions will not exceed 100 TPY of NO_X or VOC emissions.

Maximum impacts due to the Project only are predicted to be below the SMC for PM_{10} and $PM_{2.5}$ (refer to Table 6-5). As a result, a pre-construction ambient monitoring analysis is not required for these pollutants as part of the application, except for $PM_{2.5}$, due to a recent ruling by the U.S. Court of Appeals (see the following paragraphs). For O_3, the Project's VOC emissions are less than 100 TPY. Therefore, pre-construction ambient monitoring analysis is not required for O_3.

For $PM_{2.5}$, on January 22, 2013, the US Court of Appeals vacated the parts of the two PSD rules (40 CFR 51.166 and 40 CFR 52.21) establishing an SMC, finding that EPA was precluded from using the $PM_{2.5}$ SMC to exempt permit applicants from the statutory requirement to compile preconstruction monitoring data. As a result, permitting of new or modified sources requires submittal of monitoring data prior to construction regardless of the source's impact. As a result, $PM_{2.5}$ concentrations from a representative monitor must be submitted as part of the PSD permit application because the Project's $PM_{2.5}$ emissions are greater than the SER.

Based on the impacts of PM_{10} being less than the SMC an exemption from the pre-construction monitoring requirement is applicable pursuant to Rule 62-212.400(3)(e), F.A.C. In addition, ambient $PM_{2.5}$ monitoring data collected by FDEP at monitoring stations near the Project are considered to be representative of air quality in the Project's vicinity. These data are being used to satisfy the pre-construction monitoring requirement for $PM_{2.5}$.

Air quality monitoring data collected in Leon County from 2012 through 2014 for $PM_{2.5}$ is presented in Table 5-1. These data indicate that the design air quality concentrations measured in the area are below the applicable $PM_{2.5}$ ambient air quality standards.

6.0 AIR QUALITY IMPACT ANALYSIS

This section addresses the predicted air quality impacts of regulated air pollutants due to the addition of four 18.82 MW Wartsila 18V50SL engines (Project) at the existing City of Tallahassee A. B. Hopkins (Hopkins) site. The proposed engines will fire only natural gas and will replace and be located in the space where two Westinghouse combustion turbines (referred to as CT-1 and CT-2) are currently located (see Figure 1-1). In addition to the retirement of CT-1 and CT-2, Boiler Unit No. 1 will be retired when the Project is completed and operational. The general modeling approach followed the latest EPA and FDEP modeling guidelines for predicting air quality impacts for regulated pollutants.

Based on the potential emissions of the Project, the Project's emissions are greater than the PSD SERs for PM/PM_{10}/$PM_{2.5}$, and VOC. As such, an air quality impact analysis is required for these pollutants under FDEP's PSD regulations.

The following sections present a summary of the modeling methodology for the air quality impact analyses for the Project and the air impact results.

6.1 Air Modeling Analysis Approach – Site Vicinity

Model Selection

The selection of air quality models to calculate air quality impacts for the proposed project must be based on the models' ability to simulate impacts in the vicinity of the facility. The latest version of the American Meteorological Society and EPA Regulatory Model (AERMOD) dispersion model was used to evaluate the pollutant impacts due to the proposed project. AERMOD (Version 16216R) is available on the EPA's Internet web site, Support Center for Regulatory Air Models (SCRAM), within the Technology Transfer Network (TTN). The EPA and FDEP recommend that AERMOD be used to predict pollutant concentrations at receptors located within 50 km of a source. AERMOD calculates hourly concentrations based on hourly meteorological data. AERMOD is applicable for the type of Project sources and area in which the Project is located since it is recognized as containing the latest scientific algorithms for simulating plume behavior in all types of terrain.

AERMOD was used to predict the maximum pollutant concentrations due to the Project at nearby areas surrounding the facility.

For modeling analyses that will undergo regulatory review, such as determining compliance with NAAQS, the following model features are recommended by EPA for rural mode and are referred to as the regulatory default options in AERMOD:

1. Final plume rise at all receptor locations
2. Stack tip downwash
3. Buoyancy induced dispersion
4. Default wind speed profile coefficients for rural mode
5. Default vertical potential temperature gradients
6. Calm wind processing

The EPA regulatory default options were used to address maximum impacts

Project Sources

Air quality analyses were performed to assess the maximum impacts of the proposed four 18.82 MW Wartsila engines. Summaries of the criteria pollutant emission rates, physical stack and stack operating parameters for the proposed engines are presented in Section 2.0 for natural gas-firing. In the near-field analysis, air quality impacts were predicted for a range of three possible operating loads: 100 percent, 70 percent, and 40 percent. In the far-field (i.e., Class I) analysis, the 100 percent load emissions and operating parameters were assumed. Summaries of the criteria pollutant emission rates, physical stack and stack operating parameters for the proposed engines used in the air modeling analyses are presented in Table 2-1, Section 2. The new engines will each have stack heights of 75 ft and inner diameters of 5.3 ft.

Building Downwash Effects

Building downwash effects from existing and proposed structures in the vicinity of the proposed engines were included in the modeling analysis. A summary of all existing and proposed structures at the Hopkins plant is presented in Table 6-1. All structures were processed with EPA Building Profile Input Program [(BPIP), Version 04274] to determine direction specific structure heights and widths for each 10 degree azimuth direction for each source that was included in the modeling analysis. For cumulative source impact assessments building downwash was included in the modeling analysis for the existing sources at Hopkins.

Meteorological Data

Meteorological data used in AERMOD to estimate air quality impacts consisted of a concurrent 5-year period of hourly surface weather observations and upper air sounding data collected from the National Weather Service (NWS) stations located at Tallahassee International Airport (TLH) and Slidell,

Louisiana, respectively. The 5-year period of the meteorological data was from 2010 through 2014 and was prepared by the FDEP using AERMET Version 14134. AERMINUTE Version 11059 was used by FDEP to process 1-minute wind data collected by the automatic surface observing system (ASOS) into hourly averages of wind direction and wind speed. A minimum wind speed threshold of 0.5 meters per second (m/s) was used. The NWS office at the TLH airport is located approximately 7.5 km (4.7 miles) southeast of the Project site. The areas between the airport and the Hopkins plant are flat with very similar land characteristics. As such, the meteorological data with land use values from the NWS site were selected for use in the modeling analyses.

Receptor Locations

For the near-field modeling analysis, a Cartesian grid was used to predict concentrations on and beyond the Hopkins restructured property boundary out to 5 km. Receptors were located at the following intervals and distances from the Project:

Along the Plants' restricted property boundary – 50 meters
Beyond the restricted property boundary out to 2 km – 100 meters
From 2 km to 5 km – 250 meters

More than 3,000 receptors were used to estimate the maximum concentrations predicted for the Project.

For the far-field modeling analysis, receptors have been developed by the Federal Land Managers (FLM) to represent the boundary and internal areas of each PSD Class I area. For predicting air quality impacts at the Bradwell Bay NWA and Saint Marks NWA, the analysis used the FLM's 125 and 101 receptors that were developed for those two respective Class I areas.

Significant Impact Analysis

A significant impact analysis is performed to determine the maximum air quality impact due to only the Project's emissions increases. If the highest predicted impact for a particular pollutant and averaging time exceeds the respective PSD Class II significant impact level (SIL), more detailed modeling analyses are required for that pollutant and averaging time to address compliance with the NAAQS and, if applicable, the allowable PSD increment.

For the proposed project, SIL analyses were performed for the following pollutants and averaging times:

- PM_{10}: 24-hour and annual averages
- $PM_{2.5}$: 24-hour and annual averages

Initially, a load analysis was performed using vendor information to determine the worst-case operating load for the 4 engines in the site vicinity. The evaluated operating loads were as follows:

- 100 percent
- 70 percent
- 40 percent

The engine load that resulted in the highest impacts was used in any further modeling efforts to determine compliance with the NAAQS or allowable PSD Class II increments. The SIL analyses for the 24-hour and annual $PM_{2.5}$ concentrations are based on the maximum 5-year average concentrations predicted using 5 years of representative meteorological data. The SIL analyses for the 24-hour PM_{10} are based on the maximum predicted concentration over the 5-year period. The SIL analyses for the annual average PM_{10} concentration is based on the maximum predicted concentration for any year over the 5-year period.

It should be noted that in January 2013, the $PM_{2.5}$ SIL under 40 CFR 51.166(k)(2) and 40 CFR 52.21(k)(2) were vacated and remanded the portions of EPA's rule regarding the SIL to exempt sources from cumulative source modeling [Sierra Club v. EPA, 705 F.3d 458 (D.C. Circuit 2013)]. On March 4, 2013, EPA issued *Draft Guidance for $PM_{2.5}$ Permit Modeling* (Stephen D. Page, Director, OAQPS) that provided preliminary recommendations describing how a stationary source seeking a PSD permit can demonstrate that it will not cause or contribute to a violation of the NAAQS and PSD increments. According to the EPA's draft guidance, with additional justification, the permitting authority may use the same $PM_{2.5}$ SILs that were vacated to demonstrate that a full cumulative source impact analysis is not needed.

Based on the results of the significant impact analysis, only the 24-hour $PM_{2.5}$ concentrations were predicted to exceed the SIL. As such, additional cumulative source analyses are required to demonstrate compliance with the 24-hour $PM_{2.5}$ NAAQS and allowable PSD Class II increments.

Background $PM_{2.5}$ Emission Sources

Based on the results of the significant impact analysis, an inventory of background PM emission sources located within 52 km from the Hopkins plant was requested from FDEP. Additionally, the Georgia Department of Natural Resources Environmental Protection Division was contacted and a list of facilities located in nearby Seminole, Decatur and Grady Counties was obtained. A facility screening analysis was performed based on modeling guidance. All facilities that were located within the Significant Impact Area (SIA) were automatically included in the modeling analysis. Facilities that were located outside the SIA were evaluated using the 20D approach. Using this technique, facilities whose

annual emissions are greater than 20D-S, where D is the distance in km from the facility to the Project site and S is the Project's significant impact distance, were included in the modeling analysis.

The results of the facility screening analysis are provided in Table 6-2 and indicate that the only background sources that need to be considered for the cumulative modeling analyses are the existing Hopkins plant sources (i.e., Units 1 and 2A, and HC-3 and HC-4). Unit 1 was included in the modeling analysis and therefore the analysis is conservative. CT1 and CT2 were not included as these units will be removed prior to the construction of the Project. The maximum emissions and stack parameters for each background Hopkins source are shown in Table 6-3. The NAAQS modeling analyses includes the proposed engines, the existing Hopkins sources and a non-modeled background concentration to obtain a total concentration that will be compared directly to the applicable NAAQS.

The major-source $PM_{2.5}$ background date is October 2010, and the only new emission sources at Hopkins since that date is the proposed engines. As such, the impacts from the proposed engines were directly compared to the applicable PSD Class II increment.

The following concentration ranks were used for determining air compliance from cumulative modeling analyses:

- NAAQS – 24-hour PM2.5: highest 8th highest 24-hour concentration, 5-year average
- PSD Increment – 24-hour PM2.5: highest 2nd highest concentration in any year over 5-year period

Non-Modeled Background Concentration

Background concentrations are necessary to determine total ambient air quality impacts to demonstrate compliance with the NAAQS. "Background concentrations" are defined as concentrations due to sources other than those specifically included in the modeling analysis. For all pollutants, the background concentration would include other point and fugitive emission sources not included in the modeling and natural background sources. In general, monitoring data collected near the area in which the air quality impact is performed is used for this purpose.

A 24-hour $PM_{2.5}$ design background concentration 20 µg/m^3 was provided by Brian Himes of FDEP. This concentration is representative of the Tallahassee area and is based on years 2013 to 2015. This background concentration was used for the NAAQS modeling analysis.

Modeling Results

Load/Significant Analysis

The results of the load analysis for one engine firing natural gas is presented in Table 6-4. Table 6-5 presents the predicted maximum project-only impacts due to the four proposed engines as compared to the significant impact levels. Based on the results presented in Table 6-5, the proposed project's maximum impacts are predicted to be less than the SIL except for the 24-hour $PM_{2.5}$ concentration. As such, a cumulative source modeling analysis is required to determine compliance with the 24-hour $PM_{2.5}$ NAAQS and allowable PSD Class II increment. The worst-case impacts occur during 100-percent load operation and the distance of significance is 1.25 km.

NAAQS Analysis

The results of the NAAQS analysis are presented in Table 6-6. The predicted maximum impact is 9.3 µg/m^3 which when added to a background of 20 µg/m^3 results in a total concentration of 29.3 µg/m^3 which is less than the 24-hour $PM_{2.5}$ NAAQS of 35 µg/m^3.

PSD Class II Increment Analysis

The results of the PSD Class II increment analysis are summarized in Table 6-7. The predicted maximum impact is 2.5 µg/m^3 which is less than the allowable 24-hour $PM_{2.5}$ increment of 9 µg/m^3.

6.2 Air Modeling Analysis Approach – Far-Field Assessment

Model Selection and General Assumptions

A far-field impact assessment is required if the Project is located within 200 km from a PSD Class I area. The nearest PSD Class I areas to the Project site and their minimum distances (in km) are:

- Bradwell Bay National Wilderness Area (NWA) – 28.2
- Saint Marks NWA – 38.6
- Okefenokee (GA) NWA – 182.7, and
- Chassahowitzka NWA – 249.3

Based on the distances from the Project site to each Class I area, concentrations were predicted at the Bradwell Bay, Saint Marks and Okefenokee NWAs. The Bradwell Bay NWA lies entirely within 50 km from the project site. The Saint Marks NWA is mostly located within 50-km but has a small section extending out to 58 km from the project site.

AQRV Impact Requirements

The 2010 FLAG Report recommends a screening approach to exempt projects that are beyond 50 km from PSD Class I areas from AQRV impact review based on its annual emissions and distance from a

Class I area. A project is considered to have negligible impacts on Class I area AQRVs if the total annual emissions of SO_2, NO_x, PM_{10}, and SAM (Q, in TPY, based on 24-hour maximum allowable emissions), divided by the distance from the Class I area (D, in km), Q/D, is 10 or less. The maximum annualized emissions for the proposed Project are (in TPY) as follows: PM_{10}: 55.5; SO_2: 14.6; NO_X: 42.7; and SAM: 2.2.

The FLM does not require AQRV impacts to be performed at the Bradwell Bay NWA. Alternatively, AQRV impacts are automatically required at the sections of Saint Marks that are within 50 km from the Project site because the Q/D screening approach does not apply to Class I areas located within 50 km. However, for sections of the Saint Marks NWA that are beyond 50 km, Q/D is (115.1/ 50) = 2.3 and AQRV impacts are not required for that section of the NWA. Similarly, Q/D for the Okefenokee NWA is (115.1/182.7) = 0.63 and AQRV impacts are not required for that area.

The PSD applicability for the proposed project is summarized in Table 2-5 and indicates that the proposed emission increases for both sulfur dioxide and nitrogen oxides are less than the SER. As a result, annual sulfur and annual nitrogen deposition impacts at the Class I areas are not required.

The following summarizes the AQRV requirements for the PSD Class I areas nearest to the proposed project site:

- Bradwell Bay NWA: FLM does not require AQRV impacts for this area.
- St Marks NWA: Within 50 km, impacts are required for 24-hour visibility impairment only. Beyond 50 km, no AQRV impacts are required.
- Okefenokee NWA: No AQRV impacts are required.

Class I Significant Impact Analysis

Significant impact analyses were performed to assess the proposed Project's maximum impacts at the PSD Class I areas. The maximum predicted PM_{10} and $PM_{2.5}$ concentrations due to the Project were compared to EPA's proposed PSD Class I significant impact levels. If the Project's impacts exceed the proposed EPA PSD Class I significant impact level for a specific pollutant and averaging time, then a more detailed analysis is required to determine compliance with the allowable PSD Class I increment. The proposed PSD Class I SILs are:

- PM_{10}: 24-hour – 0.3 µg/m^3, annual – 0.2 µg/m^3
- $PM_{2.5}$: 24-hour – 0.07 µg/m^3, annual – 0.06 µg/m^3

AERMOD was used to predict concentrations at the Class I areas using the same 5-year meteorological data record that was used for the near-field impact assessment. For Class I areas that are located beyond 50 km from the Project, current EPA guidance permits the use of AERMOD with a ring of

360 receptors, spaced at 1-degree intervals at a distance of 50 km from the project site. For this analysis, to be conservative, the elevations all receptors were set to the elevation of the Project site (i.e., 41 m).

If the highest concentrations are predicted to be less than the significant impact levels, no additional modeling is required to address Class I impacts. If the maximum predicted concentrations from the AERMOD analyses are greater than one or more PSD Class I SILs, a more refined Class I analysis can be performed using the California Puff (CALPUFF, Version 5.8.4) modeling system. For the proposed Project the use of CALPUFF to refine the results of the significant impacts screening analysis was not required.

Project Information

For the far-field analysis, the proposed engines were assumed to operate under maximum emission (i.e., baseload) conditions.

Receptor Locations

For predicting air quality impacts at the Bradwell Bay NWA and Saint Marks NWA, the analysis used the FLM's 125 and 101 receptors that were developed for those two respectively Class I areas. A ring of 360 receptors, spaced at 1-degree intervals and at a distance of 50 km from the proposed project, was used for Class I areas located beyond 50 km from the proposed project site.

Class I Significant Impact Analysis Results

The results of the PSD Class I significant impact analysis are summarized in Table 6-8. The results indicate that the proposed project's maximum predicted impacts will be less than the Class I SIL at all areas. As such, further analyses to demonstrate compliance with the allowable PSD Class I increments are not required.

7.0 ADDITIONAL IMPACT ANALYSIS

This section presents the impacts that the Project and general commercial, residential, industrial and other growth associated with the Project will have on vegetation, soils, and visibility in the vicinity of the site and impacts at the PSD Class I areas related to AQRVs. Specifically, this section addresses FDEP Rules 62-212.400(4)(e), (8)(a) and (b), and (9), F.A.C. These rules are:

> (4) Source Information.
>
> (e) The air quality impacts, and the nature and extent of any or all general commercial, residential, industrial, and other growth which has occurred since August 7, 1977, in the area the source or modification would affect.
>
> (8) Additional Impact Analyses.
>
> (a) The owner or operator shall provide an analysis of the impairment to visibility, soils and vegetation that would occur as a result of the source or modification and general commercial, residential, industrial and other growth associated with the source or modification. The owner or operator need not provide an analysis of the impact on vegetation having no significant commercial or recreational value.
>
> (b) The owner or operator shall provide an analysis of the air quality impact projected for the area as a result of general commercial, residential, industrial and other growth associated with the source or modification.
>
> (9) Sources Impacting Federal Class I Areas. Sources impacting Federal Class I areas are subject to the additional requirements provided in 40 CFR 52.21(p), adopted by reference in Rule 62-204.800, F.A.C.

7.1 Potential Impacts Due to Associated Growth

7.1.1 Impacts of Associated Growth

Construction of the proposed Project will occur over approximately 12 to 18 months and will require an average no more than 200 workers during that time. It is anticipated that many of these construction personnel will commute to the site. However, no additional permanent workers will be employed for the operation of the facility. The workforce needed to construct and operate the facility represents a small fraction of the population already present in the immediate area. Therefore, while there would be a small increase in vehicular traffic in the area, the effect on air quality levels would be minimal.

There are also expected to be no air quality impacts due to associated commercial and industrial growth since the Project is replacing existing capacity. The existing commercial and industrial infrastructure is adequate to provide any support services that facility might require and would not increase with the operation of the facility.

As demonstrated in Section 6.0, the maximum air quality impacts resulting from the proposed engine Project are predicted to be low and below the significant impact levels for all but the 24-hour $PM_{2.5}$ concentrations. The predicted cumulative source 24-hour $PM_{2.5}$ impacts demonstrate that the City of

Tallahassee Hopkins plant and background sources will comply with the NAAQS. The retirement of Unit 1 operation as well as the removal of CT1 and CT2 are expected to improve air quality in the vicinity of the Hopkins Plant.

7.2 Potential Air Quality Effect Levels on Soils, Vegetation and Wildlife

7.2.1 Soils

The potential and hypothesized effects of atmospheric deposition on soils include:

- Increased soil acidification
- Alteration in cation exchange
- Loss of base cations
- Mobilization of trace metals

The potential sensitivity of specific soils to atmospheric inputs is related to two factors. First, the physical ability of a soil to conduct water vertically through the soil profile is important in influencing the interaction with deposition. Second, the ability of the soil to resist chemical changes, as measured in terms of pH and soil cation exchange capacity, is important in determining how a soil responds to atmospheric inputs.

7.2.2 Vegetation

The concentrations of the pollutants, duration of exposure, and frequency of exposure influence the response of vegetation to atmospheric pollutants. The pattern of pollutant exposure expected from the facility is that of a few episodes of relatively high ground-level concentration, which occur during certain meteorological conditions, interspersed with long periods of extremely low ground-level concentrations. If there are any effects of stack emissions on plants, they will be from the short-term, higher doses. A dose is the product of the concentration of the pollutant and duration of the exposure.

In general, the effects of air pollutants on vegetation occur primarily from SO_2, NO_2, O_3, and PM. Effects from minor air contaminants, such as fluoride, chlorine, hydrogen chloride, ethylene, ammonia, hydrogen sulfide, CO, and pesticides, have also been reported in the literature. The effects of air pollutants are dependent both on the concentration of the contaminant and the duration of the exposure. The term “injury,” as opposed to damage, is commonly used to describe all plant responses to air contaminants and will be used in the context of this analysis. Air contaminants are thought to interact primarily with plant foliage, which is considered to be the major pathway of exposure.

Injury to vegetation from exposure to various levels of air contaminants can be termed acute, physiological, or chronic. Acute injury occurs as a result of a short-term exposure to a high contaminant concentration and is typically manifested by visible injury symptoms ranging from chlorosis

(discoloration) to necrosis (dead areas). Physiological or latent injury occurs as the result of a long-term exposure to contaminant concentrations below those that result in acute injury symptoms. Chronic injury results from repeated exposure to low concentrations over extended periods of time, often without any visible symptoms, but with some effect on the overall growth and productivity of the plant. In this assessment, 100 percent of the particular air pollutant in the ambient air was assumed to interact with the vegetation, which is a very conservative approach.

Sulfur Dioxide

Sulfur is an essential plant nutrient usually taken up as sulfate ions by the roots from the soil solution. When SO_2 in the atmosphere enters the foliage through pores in the leaves, it reacts with water in the leaf interior to form sulfite ions. Sulfite ions are highly toxic. They interact with enzymes, compete with normal metabolites, and interfere with a variety of cellular functions (Horsman and Wellburn, 1976). However, within the leaf, sulfite is oxidized to sulfate ions, which can then be used by the plant as a nutrient. Small amounts of sulfite may be oxidized before they prove harmful.

Observed SO_2 effect levels for several plant species and plant sensitivity groupings are presented in Tables 7-1 and 7-2, respectively. SO_2 gas at elevated levels has long been known to cause injury to plants. Acute SO_2 injury usually develops within a few hours or days of exposure, and symptoms include marginal, flecked, and/or intercostal necrotic areas that appear water-soaked and dullish green initially. This injury generally occurs to younger leaves. Chronic injury is usually evident by signs of chlorosis, bronzing, premature senescence, reduced growth, and possible tissue necrosis (EPA, 1982). Background levels of SO_2 range from 2.5 to 25 µg/m^3.

Many studies have been conducted to determine the effects of high-concentration, short-term SO_2 exposure on natural community vegetation. Sensitive plants include ragweed, legumes, blackberry, southern pine, and red and black oak. These species are injured by exposure to 3-hour SO_2 concentrations of 790 to 1,570 µg/m^3. Intermediate plants include locust and sweetgum. These species are injured by exposure to 3-hour SO_2 concentrations of 1,570 to 2,100 µg/m^3. Resistant species (injured at concentrations above 2,100 µg/m^3 for 3 hours) include white oak and dogwood (EPA, 1982).

A study of native Floridian species (Woltz and Howe, 1981) demonstrated that cypress, slash pine, live and oak exposed to 1,300 µg/m^3 SO_2 for 8 hours were not visibly damaged. This finding supports the levels cited by other researchers on the effects of SO_2 on vegetation. A corroborative study (McLaughlin and Lee, 1974) demonstrated that approximately 20 percent of a cross-section of plants ranging from sensitive to tolerant was visibly injured at 3-hour SO_2 concentration of 920 µg/m^3. Jack pine seedlings exposed to SO_2 concentrations of 470 to 520 µg/m^3 for 24 hours demonstrated inhibition

of foliar lipid synthesis; however, this inhibition was reversible (Malhotra and Kahn, 1978). Black oak exposed to 1,310 µg/m^3 SO_2 for 24 hours a day for 1 week demonstrated a 48-percent reduction in photosynthesis (Carlson, 1979).

SO_2 is considered to be the primary factor causing the death of lichens in most urban and industrial areas. The first indications of damage from SO_2 include the inhibition of nitrogen fixation, increased electrolyte leakage, and decreased photosynthesis and respiration followed by discoloration and death of the algal component of the lichen (Fields, 1988). Sensitive species are damaged or killed by annual average levels of SO_2 ranging from 8 to 30 µg/m^3, and very few lichens can tolerate levels exceeding 125 µg/m^3 (Johnson, 1979; DeWit, 1976; Hawsworth and Rose, 1970; LeBlanc et al., 1972). In another study, two lichen species exhibited signs of SO_2 damage in the form of decreased biomass gain and photosynthetic rate as well as membrane leakage when exposed to concentrations of 200 to 400 µg/m^3 for 6 hours/week for 10 weeks (Hart et al., 1988).

Acidic precipitation is formed from SO_2 emissions during the burning of fossil fuels. This pollutant is oxidized to sulfur trioxide in the atmosphere and dissolves in rain to form SAM, which falls as acidic precipitation (Ravera, 1989). Although concentration data are not available, SAM has been reported to yield necrotic spotting on the upper surfaces of leaves (Middleton et al., 1950).

Nitrogen Dioxide

NO_2 can injure plant tissue with symptoms usually appearing as irregular white to brown collapsed lesions between the leaf veins and near the margins. Conversely, non-injurious levels of NO_2 can be absorbed by plants, enzymatically transformed into ammonia, and incorporated into plant constituents such as amino acids (Matsumaru, et al., 1979).

For plants that have been determined to be more sensitive to NO_2 exposure than others, acute exposure (1, 4, and 8 hours) caused 5 percent predicted foliar injury at concentrations ranging from 3,800 to 15,000 µg/m^3 (Heck and Tingey, 1979). Chronic exposure of selected plants (some considered NO_2 sensitive) to NO_2 concentrations of 2,000 to 4,000 µg/m^3 for 213 to 1,900 hours caused reductions in yield of up to 37 percent and some chlorosis (Zahn, 1975). Short-term exposure to NO_x at concentrations of 564 µg/m^3 caused adverse effects in lichen species (Holopainen and Karenlampi, 1984).

Particulate Matter

Although information pertaining to the effects of PM on plants is scarce, baseline concentrations are available (Mandoli and Dubey, 1988). Ten species of native Indian plants were exposed to levels of PM that ranged from 210 to 366 µg/m^3 for an 8-hour averaging period. Damage in the form of a higher

leaf area/dry weight ratio was observed at varying degrees for most plants tested. Concentrations of PM lower than 163 µg/m^3 did not appear to be injurious to the tested plants.

Carbon Monoxide

Information pertaining to the effects of CO on plants is scarce. The main effect of high concentrations of CO is the inhibition of cytochrome *c* oxidase, the terminal oxidase in the mitochondrial electron transfer chain. Inhibition of cytochrome *c* oxidase depletes the supply of adenosine triphosphate (ATP), the principal donor of free energy required for cell functions. However, this inhibition only occurs at extremely high concentrations of CO. Pollok, et al. (1989) reported that exposure to a CO:O_2 ratio of 25 (equivalent to an ambient CO concentration of 6.85×10^6 µg/m^3) resulted in stomatal closure in the leaves of the sunflower (*Helianthus annuus*). Naik, et al. (1992) reported cytochrome *c* oxidase inhibition in corn, sorghum, millet, and Guinea grass at CO:O_2 ratios of 2.5 (equivalent to an ambient CO concentration of 6.85×10^5 µg/m^3). These plants were considered the species most sensitive to CO-induced inhibition of cytochrome *c* oxidase.

Ozone

O_3 can cause various damage to broad-leaved plants including: tissue collapse, interveinal necrosis, and markings on the upper surface leaves know as stippling (pigmented yellow, light tan, red brown, dark brown, red, or purple), flecking (silver or bleached straw white), mottling, chlorosis or bronzing, and bleaching. O_3 can also stunt plant growth and bud formation. On certain plants such as citrus, grape, and tobacco, it is common for leaves to wither and drop early.

7.2.3 Wildlife

A wide range of physiological and ecological effects to fauna has been reported for gaseous and particulate pollutants (Newman, 1981; Newman and Schreiber, 1988). The most severe of these effects have been observed at concentrations above the secondary NAAQS. Physiological and behavioral effects have been observed in experimental animals at or below these standards. For impacts on wildlife, the lowest threshold values of SO_2, NO_x, and particulates that are reported to cause physiological changes are shown in Table 7-3.

7.2.4 Impact Analysis Methodology

A screening approach was used that compared the Project's maximum predicted ambient concentrations of air pollutants of concern in the vicinity of the site and the Saint Marks NWA PSD Class I Area with effect threshold limits for both vegetation and wildlife as reported in the scientific literature. A literature search was conducted to determine the effects of air contaminants on plant species as well as those species reported to occur in the vicinity of the site and in the PSD Class I area. It is recognized that effect threshold information is not available for all species found in these areas,

although studies have been performed on a few of the common species and on other species known to be sensitive indicators of effects. Species of lichens, which are symbiotic organisms comprised of green or blue-green algae and fungi, have been used worldwide as air pollution monitors because relatively low levels of sulfur-, nitrogen-, and fluorine-containing pollutants adversely affect many species, altering lichen community composition, growth rates, reproduction, physiology, and morphological appearance (Blett, et al., 2003).

7.3 Impacts on Soils, Vegetation, Wildlife, and Visibility in the Project's Vicinity

7.3.1 Impacts on Vegetation and Soils

According to the modeling results presented in Section 6.0, the maximum air quality impacts due to the proposed Project are predicted to be below the NAAQS and PSD increments. The NAAQS were established to protect both public health and welfare. Public welfare is protected by the secondary NAAQS, which Florida has adopted. Secondary standards set limits to protect public welfare, including protection against visibility impairment, damage to animals, crops, vegetation, and buildings (EPA, 2007).

Since the project's impacts on the local air quality are predicted to be less than the NAAQS and less than the effect levels on soils and vegetation, the project's impacts on soils, vegetation, and wildlife in the vicinity of the site are expected to be negligible. With regard to O_3 concentrations, the Project's VOC and NO_x emissions (precursors to O_3 formation) represent an insignificant increase in VOC and NO_x emissions.

7.3.2 Impacts on Wildlife

The major air quality risk to wildlife in the United States is from continuous exposure to pollutants above the NAAQS. This occurs in non-attainment areas. Risks to wildlife also may occur for wildlife living in the vicinity of an emission source that experiences frequent upsets or episodic conditions resulting from malfunctioning equipment, unique meteorological conditions, or startup operations (Newman and Schreiber, 1988). Under these conditions, chronic effects (e.g., particulate contamination) and acute effects (e.g., injury to health) have been observed (Newman, 1981).

Although air pollution impacts to wildlife have been reported in the literature, many of the incidents involved acute exposures to pollutants, usually caused by unusual or highly concentrated releases or unique weather conditions. It is highly unlikely that emissions from the Project will cause adverse effects to wildlife due to the new Project's low impacts, which are predicted to be below the NAAQS based on worst-case operation. Coupled with the mobility of wildlife, the potential for exposure of wildlife to the project's impacts is extremely unlikely. In addition, the Project replaces CT-1 and CT-2

located at the same location. These factors are expected to provide an improvement in the air quality in the vicinity of the Hopkins Plant area.

7.3.3 Visibility

No visibility impairment in the vicinity of Project is expected due to the types and quantities of emissions proposed for the Project. The opacity of the Wartsila engines will be 10 percent or less since only natural gas will be used. In addition, with the retirement of Unit 1 any visible plumes from the Hopkins Plant will be significantly reduced. The Project will utilize an air cooled radiator that has no vapor plume.

7.4 Impacts to the Saint Marks NWA PSD Class I Area

7.4.1 Identification of AQRVs and Methodology

The U.S. Department of the Interior in 1978 defined AQRVs to be:

- All those values possessed by an area except those that are not affected by changes in air quality and include all those assets of an area whose vitality, significance, or integrity is dependent in some way upon the air environment. These values include visibility and those scenic, cultural, biological, and recreational resources of an area that are affected by air quality.
- Important attributes of an area are those values or assets that make an area significant as a national monument, preserve, or primitive area. They are the assets that are to be preserved if the area is to achieve the purposes for which it was set aside (Federal Register, 1978).

The AQRVs include visibility, freshwater and coastal wetlands, dominant plant communities, unique and rare plant communities, soils and associated periphyton, and the wildlife dependent on these communities for habitat. Rare, endemic, threatened, and endangered species of the national park and bioindicators of air pollution (e.g., lichens) are also required to be evaluated. For the Project, the AQRVs required to be evaluated is related to visibility due primarily to emissions of PM_{10}, $PM_{2.5}$, and NO_X.

7.4.2 Impacts Upon Visibility

Introduction

The Clean Air Act Amendments of 1977 provide for implementation of guidelines to prevent visibility impairment in mandatory Class I areas. The guidelines are intended to protect the aesthetic quality of these pristine areas from reduction in visual range and atmospheric discoloration due to various pollutants. Sources of air pollution can cause visible plumes if emissions of PM_{10}, $PM_{2.5}$, and NO_x are sufficiently large. A plume will be visible if its constituents scatter or absorb sufficient light so that the plume is brighter or darker than its viewing background (e.g., the sky or a terrain feature, such as a mountain). PSD Class I areas, such as national parks and wilderness areas, are afforded special visibility protection designed to prevent plume visual impacts to observers within a Class I area.

Visibility is an AQRV for the Saint Marks NWA. Visibility can take the form of plume blight for nearby areas or regional haze for long distances (e.g., distances beyond 50 km). For areas of the Saint Marks NWR located within 50 km from the Hopkins Plant the change in visibility was analyzed as plume blight and the following methodology discussed in the following paragraphs was used to address the Project's impacts on that AQRV.

Methodology

An analysis to determine the potential adverse plume visibility effects in the Saint Marks NWA was conducted using the screening approach suggested in the Workbook for Plume Visual Impact Screening and Analysis (EPA, 1992), which has been computerized by EPA in a program called the VISCREEN model. The VISCREEN model is currently recommended by FDEP and EPA to assess visual plume impacts in regulatory applications at Class I areas located within 50 km from a project site. The Saint Marks NWA Class I area is between 38.6 and 58 km from the proposed project site. The VISCREEN model can be used to calculate potential plume impact of specific pollutant emissions for specific transport and meteorological dispersion conditions. The model can be applied in two successive levels of screening (i.e., referred to as Levels 1 and 2) without the need for extensive source, meteorological, or pollutant input. If the screening calculations demonstrate that, during worst-case meteorological conditions a plume is imperceptible or, if perceptible, is not likely to be considered objectionable ("adverse" or "significant" in the language of the EPA PSD and visibility regulations), and further analysis of plume visual impact would not be required as part of the air quality review of the source. However, if the screening analyses demonstrate that the criteria are exceeded, plume visual impacts cannot be ruled out, and more detailed analyses to ascertain the magnitude, frequency, location, and timing of plume visual impacts would be required.

The Level 1 screening analysis is designed to provide a conservative estimate of plume visual impacts (i.e., impacts that would be larger than those calculated with more realistic input and modeling assumptions). This analysis assumes worst-case meteorological conditions of stable stability (Pasquill-Gifford stability Class F) and a 1 m/s wind speed persisting for 12 hours in one direction towards a PSD Class I area. The input required for the Level 1 analysis is limited to the following parameters:

- Emission rates of PM_{10}, $PM_{2.5}$, and NO_x
- Distance between the emission source and (a) the observer; (b) the closest Class I area boundary; and (c) the most distant Class I area boundary
- Background visual range appropriate for the region in which the Class I area is located
- If available, emission rates of NO_2, soot, and primary sulfate. For this analysis, the Project's H_2SO_4 emissions were included as primary sulfate

Visibility impacts are then determined for two parameters:

- Contrast of a plume against a viewing background such as the sky or a terrain feature
- Perceptibility of a plume on the basis of the color difference between the plume and the viewing background (Delta E)

Results are provided by the model for several scenarios based on the background view, the viewing angle, visibility improvement due to plumes located both inside and outside the Class I area, and the sun angle. Only impacts inside the Class I area are relevant for the proposed project as impacts outside the Class I area are only relevant for several integral vistas located in the northeastern US. The critical values for contrast and Delta E are 0.05 and 2.00, respectively. If these levels are not exceeded by the proposed source, the source is considered to pass the Level 1 visibility analysis, and to not have a significant impact on the Class I area.

The Saint Marks NWA is at sea-level and the terrain between the project site and the PSD Class I area is considered as generally flat with no adverse terrain features. With no terrain features that can be used as a viewing background, visibility impacts were determined using the sky as the only viewing background.

Natural gas is the only fuel that the proposed engines will use. The input parameters and results of the Level 1 analysis for the project are presented in Figure 7-1. As shown, the project will emit PM_{10}, NO_x, and primary SO_4 (sulfate as sulfuric acid mist). The maximum short-term average emission rates used in the analysis, which are presented in Section 2.0, are based on the engines operating at baseload conditions. Primary NO_2 and soot are not emitted in significant quantities by combustion sources; therefore, these emissions were set to the default value of zero.

The background visual range for Saint Marks was assumed to be 190 km which represents the largest value for monthly average natural conditions visual range as presented in Table V.1-6 of the Federal Land Manager*'s Air Quality Related Values Workgroup (FLAG), Phase I Report (Revised 2010)*. Other parameters input to the model were based upon default values given in the Workbook and incorporated into the computer model.

Results

As shown in Figure 7-1, for the proposed project's maximum emissions, 24-hour visibility Impacts at the Saint Marks NWA are calculated to be less than the Level 1 visibility screening criteria. As a result, the Project is not expected to have an adverse impact on the existing visibility at that PSD Class I area.

REFERENCES

Blett, T., Geiser, L., and E. Porter. 2003. Air pollution-related lichen monitoring in National Parks, Forests, and Refuges: Guidelines for Studies Intended for Regulatory and Management Purposes. NPS D2292. National Park Service Air Resources Division; U.S. Forest Service Air Resource Management Program; U.S. Fish and Wildlife Service Air Quality Branch

Carlson, R.W. 1979. Reduction in the Photosynthetic Rate of *Acer quercus* and *Fraxinus* Species Caused by Sulphur Dioxide and Ozone. Environ. Pollut. 18:159-170.

City of Tallahassee, 2016. Ten-Year Site Plan: 2016-2025. City of Tallahassee Utilities.

Delaware Department of Natural Resources and Environmental Control, Division of Air Quality, Wolf Technology Center 1, Application for Nonattainment, Minor New Source review, and PSD Application. 2013. Duffield Associates.

ER/C Incorporated, 2010. Control Cost for Existing Stationary RICE – Technical Memorandum to U.S. EPA, Office of Air Quality Planning and Standards (OAQPS). June 29, 2010.

Fields, R.F. 1988. Physiological responses of lichens to air pollutant fumigations. In: Nash, T.H. III, ed. *Lichens, Bryophytes and Air Quality*. Biblio. Lichenol. 30. J. Cramer, Berlin-Stuttgart.

Hart, R., P.G. Webb, R.H. Biggs, and K.M. Portier. 1988. The Use of Lichen Fumigation Studies to Evaluate the Effects of New Emission Sources on Class I Areas. J. Air Poll. Cont. Assoc. 38:144-147.

Heck, W.W. and D.T. Tingey. 1979. Nitrogen Dioxide: Time-Concentration Model to Predict Acute Foliar Injury. EPA-600/3-79-057, U.S. Environmental Protection Agency, Corvallis, OR.

Malhotra, S.S. and A.A. Kahn. 1978. Effect of Sulfur Dioxide Fumigation on Lipid Biosynthesis in Pine Needles. Phytochemistry 17:241-244.

Mandoli, B.L. and P.S. Dubey. 1988. The Industrial Emission and Plant Response at Pithampur (M.P.). Int. J. Ecol. Environ. Sci. 14:75-79.

Matsumaru, T., T. Yoneyama, T. Totsuka, and K. Shiratori. 1979. Absorption of Atmospheric NO_2 by Plants and Soils. Soil Sci. Plant Nutr. 25:255-265.

McLaughlin, S.B. and N.T. Lee. 1974. Botanical Studies in the Vicinity of the Widows Creek Steam Plant. Review of Air Pollution Effects Studies, 1952-1972, and Results of 1973 Surveys. Internal Report I-EB-74-1, TVA.

Middleton, J.T. et al. 1950. Smog in the South Coastal Area of California. California Agriculture 4:7-11.

Naik, R.M., A.R. Dhage, S.V. Munjal, P. Singh, B.B. Desai, S.L. Mehta, and M.S. Naik. 1992. Differential Carbon Monoxide Sensitivity of Cytochrome c Oxidase in the Leaves of C3 and C4 Plants. Plant Physiology 98:984-987.

Newman, J.R. 1981. Effects of Air Pollution on Animals at Concentrations at or Below Ambient Air Standards. Performed for Denver Air Quality Office, National Park Service, U.S. Department of the Interior. Denver, Colorado.

Newman, J.R. and R.K. Schreiber. 1988. Air Pollution and Wildlife Toxicology. Environmental Toxicology and Chemistry. 7:381-390.

Pollok, M., U. Hever, and M.S. Naik. 1989. Inhibition of stomatal opening in sunflower leaves by carbon monoxide and reversal of inhibition by light. Planta 178:223-230.

Sutkowski, M., 2011. Wartsila 18V50SG – The World's Biggest Four-Stroke Spark-ignited Gas Engine. Polish Scientific Society of Combustion Engines.

Texas Environmental Control Commissions, Permit O3810, South Texas Electric Cooperative, Inc., Red Gate Power Project. 2015.

U.S. Environmental Protection Agency. 1990. Prevention of Significant Deterioration Workshop Manual.

U.S. Environmental Protection Agency. 1990. “Top-Down” Best Available Control Technology Guidance Document (Draft). Research Triangle Park, North Carolina.

U.S. Environmental Protection Agency. 2011. PSD and Title V Permitting Guidance for Greenhouse Gases. March 2011

U.S. Environmental Protection Agency. 2011. User's Guide for the AMS/EPA Regulatory Model-AERMOD. Through Addendum, December 2011.

U.S. Environmental Protection Agency. 2009. Guideline on Air Quality Models. Appendix W, 40 CFR 52.

TABLES

Table 2-1: Stack, Operating, and Emission Data for Each Engine
Wartsila Model 18V50SG, Natural Gas

		Operating Load and Emission Data Per Engine		
Parameter	**Units**	**100% Load**	**70% Load**	**40% Load**
CT/HRSG Stack Data				
Height	ft	75	75	75
Diameter	ft	5.3	5.3	5.3
Temperature	^{o}F	684.0	754.0	822.0
Stack Exhaust Velocity	ft/sec	94.7	71.3	46.2
Maximum Hourly Emissions				
SO_2	lb/hr	0.833	0.613	0.382
$PM/PM_{10}/PM_{2.5}$	lb/hr	3.170	2.480	2.150
NO_x	lb/hr	2.440	1.910	1.100
CO	lb/hr	4.960	3.880	2.240
VOC (as methane)	lb/hr	4.920	3.850	3.600
Sulfuric Acid Mist	lb/hr	0.128	0.094	0.058

Sources: Wartsila, 2016; Golder, 2016.

Table 2-2: Summary of Maximum Potential Annual Emissions for Each Engine and Four Engines
Wartsila Model 18V50SG, Natural Gas

Engine Operating Mode	Annual operating hours at each operating mode [a]							
	Scenario 1	Scenario 2	Scenario 3	Scenario 4	Scenario 5	Scenario 6		
Base Load	**8,760**	**4,760**	**4,760**	**2,760**	**0**	**0**		
70% Load	**0**	**4,000**	**0**	**3,000**	**8,760**	**0**		
40% Load	**0**	**0**	**4,000**	**3,000**	**0**	**8,760**		
Pollutant	**Maximum Potential Annual Emissions (TPY)**						**Annual Emissions One Engine (TPY)**	**Annual Emissions Four Engines (TPY)**
SO_2	3.65	3.21	2.75	2.64	2.69	1.67	**3.6**	**14.6**
$PM/PM_{10}/PM_{2.5}$	13.88	12.50	11.84	11.32	10.86	9.42	**13.9**	**55.5**
NO_x	10.69	9.63	8.01	7.88	8.37	4.82	**10.7**	**42.7**
CO	21.72	19.56	16.28	16.02	16.99	9.81	**21.7**	**86.9**
VOC (as methane)	21.55	19.41	18.91	17.96	16.86	15.77	**21.5**	**86.2**
Sulfuric Acid Mist	0.56	0.49	0.42	0.40	0.41	0.26	**0.56**	**2.2**

[a] Hourly emissions (lb/hr) for each engine normal operation

Pollutant	Base	70% Load	40% Load
SO_2	0.833	0.613	0.382
$PM/PM_{10}/PM_{2.5}$	3.170	2.480	2.150
NO_x	2.440	1.910	1.100
CO	4.960	3.880	2.240
VOC (as methane)	4.920	3.850	3.600
Sulfuric Acid Mist	0.128	0.094	0.058

Source: Golder Associates, 2016.

Table 2-3: Summary of PSD Applicability for Four Engines without Offsets from Unit 1
Wartsila Model 18V50SG, Natural Gas

Pollutant	Maximum Potential Emissions Four Engines (TPY)	PSD Significant Emission Rate (TPY)
SO_2	14.6	40
PM	55.5	25
PM_{10}	55.5	15
$PM_{2.5}$	55.5	10
NO_x	42.7	40
CO	86.9	100
VOC (as methane)	86.2	40
Sulfuric Acid Mist	2.2	7
Greenhouse Gases (CO_2e)		
CO_2	320,074.5	
CH_4	148.4	
N_2O	176.9	
Total CO_2e	320,399.7	75,000

Source: Golder, 2016.

Table 2-4: Annual Average Emissions for Arvah B. Hopkins Generating Station Unit 1 for Each Consecutive Two-Year Period, 2011-201!

	Annual Emissions for Boiler #1					Two-Year Average Emissions			
Pollutant	2016	2015	2014	2013	2012	2016-2015 (tons)	2015-2014 (tons)	2014-2013 (tons)	2013-2012 (tons)
NO_x	201.6	174.7	158.5	143.7	115.2	188.2	166.6	151.1	129.5
CO	86.85	80.7	76.6	74.9	64.9	83.8	78.6	75.7	69.9
SO_2	0.7	0.6	0.6	0.4	0.4	0.7	0.6	0.5	0.4
VOC	5.7	5.3	5.0	4.9	4.2	5.5	5.1	5.0	4.6
PM	7.9	7.5	7.9	6.8	5.9	7.7	7.7	7.3	6.3
PM_{10}	7.9	7.5	7.9	6.8	5.9	7.7	7.7	7.3	6.3
$PM_{2.5}$	7.9	1.8	1.7	1.7	1.5	4.9	1.8	1.7	1.6
SAM [a]	0.11	0.09	0.09	0.06	0.06	0.10	0.09	0.08	0.06
CO_2	135,382.0	117,729.5	111,340.4	104,503.9	82,164.2	126,555.7	114,535.0	107,922.1	93,334.0
N_2O [b] (CO_2e)	69.5	65.1	60.9	59.5	52.8	67.3	63.0	60.2	56.2
CH_4 [b] (CO_2e)	58.3	54.6	51.1	49.9	44.3	56.5	52.8	50.5	47.1

[a] Not reported in AORs - based on assuming 10% of SO_2 converts to SO_3, all of which converts to SAM.

[b] Calculated based on actual annual heat input and 40 CFR Part 98 Subpart C emission factors. See Table B-3.

Source: Annual Operating Report (AOR) for Arvah B. Hopkins Generating Station, 2011 - 2015; EPA's Acid Rain database.

Table 2-5. PSD Applicability - Arvah B. Hopkins Generating Station - Project and Unit 1 Emissions Offsets

Pollutant	Baseline Actual Emissions[a] Unit 1 (TPY)	Maximum Potential Emissions Four Engines (TPY)	Net Increase/Decrease in Annual Emissions [b] (TPY)	PSD Significant Emission Rates (TPY)	PSD Review Required? [c]
NO_x	188.15	42.7	-145.4	40	No
CO	83.78	86.9	3.1	100	No
SO_2	0.65	14.6	13.9	40	No
VOC	5.49	86.20	80.7	40	Yes
PM	7.72	55.5	47.8	25	Yes
PM_{10}	7.72	55.5	47.8	15	Yes
$PM_{2.5}$	4.86	55.5	50.7	10	Yes
SAM	0.10	2.2	2.1	7	No
GHGs					
CO_2	126,555.7	320,074.5	193,518.7		
N_2O (CO_2e)	67.3	148.4	81.1		
CH_4 (CO_2e)	56.5	176.9	120.4		
Total GHGs (CO_2e)	126,679.5	320,399.7	193,720.2	75,000	Yes

[a] Maximum 2-Year average emissions - see Tables 2-4.

[b] Potential Emissions = maximum Project emissions - baseline actual emissions for Unit 1.

[c] Threshold applies only if PSD review triggered for regulated air pollutants other than GHG.

Table 3-1: National and State AAQS, Allowable PSD Increments and Significant Impact Levels

Pollutant	Averaging Time	National and Florida AAQS ($\mu g/m^3$)		PSD Increments ($\mu g/m^3$)		Significant Impact Levels ($\mu g/m^3$)	
		Primary Standard	Secondary Standard	Class I	Class II	Class I	Class II
Particulate Matter (PM_{10}) [a]	Annual Arithmetic Mean	NA	NA	4	17	0.2	1
	24-Hour Maximum	150	150	4	30	0.3	5
Particulate Matter ($PM_{2.5}$) [a]	Annual Arithmetic Mean	12	15	1	4	0.06	0.3
	24-Hour Maximum	35	35	2	9	0.07	1.2
Sulfur Dioxide [b]	Annual Arithmetic Mean	80	NA	2	20	0.1	1
	24-Hour Maximum	365	NA	5	91	0.2	5
	3-Hour Maximum	NA	1,300	25	512	1	25
	1-Hour Maximum	197	NA	NA	NA	NA	7.9 [e]
Carbon Monoxide	8-Hour Maximum	10,000	10,000	NA	NA	NA	500
	1-Hour Maximum	40,000	40,000	NA	NA	NA	2,000
Nitrogen Dioxide [c]	Annual Arithmetic Mean	100	100	2.5	25	0.1	1
	1-Hour Maximum	188	NA	NA	NA	NA	7.6 [e]
Ozone [d]	1-Hour Maximum	NA	NA	NA	NA	NA	NA
	8-Hour Maximum	147	147	NA	NA	NA	NA
Lead	Rolling 3-Month Average	0.15	0.15	NA	NA	NA	NA

Note: NA = not applicable.
AAQS = ambient air quality standard.

[a] On October 17, 2006, EPA promulgated revised PM_{10} and $PM_{2.5}$ AAQS; the $PM_{2.5}$ AAQS had been promulgated on July 18, 1997. For PM_{10}, the annual standard was revoked and the 24-hour standard was retained. The 24-hour $PM_{2.5}$ standard was revised to 35 $\mu g/m^3$ based on the 3-year averages of the 98th percentile values. The annual $PM_{2.5}$ standard of 15 $\mu g/m^3$, 3-year averages at community monitors, was retained.

[b] On June 23, 2010, EPA promulgated the 1-hour SO_2 standard at a level of 75 parts per billion (ppb), based on the 3-year average of the annual 99th percentile of 1-hour daily maximum concentrations (effective August 23, 2010). EPA is also revoking both the existing 24-hour and annual primary SO_2 standards, effective one year after the designation of an area, pursuant to section 107 of the Clean Air Act.

[c] On February 9, 2010, EPA promulgated the 1-hour NO_2 standard at a level of 100 ppb, based on the 3-year average of the annual 99th percentile of 1-hour daily maximum concentrations (effective April 12, 2010).

[d] On March 27, 2008, EPA promulgated revised AAQS for ozone. The O_3 standard was modified to be 0.075 ppm (147 $\mu g/m^3$) for the 8-hour average; achieved when the 3-year average of 99th percentile values is 0.075 ppm or less.

[e] For NO_2 and SO_2 1-hour averaging period, an interim Class II significant impact level is shown.

Sources: FR, Vol. 43, No. 118, June 19, 1978; 40 CFR 50; 40 CFR 52.21; Florida Chapter 62.204, F.A.C.
Golder, 2017.

Table 5-1: Summary of Maximum $PM_{2.5}$ Measurements in Vicinity of COT Hopkins Plant, 2012 to 2014

				Concentration (µg/m³)		
				24-Hour		
		Measurement Period		2nd	98th	Annual [b]
Site No.	**Location**	**Year**	**Months**	**Highest**	**Percentile [a]**	**Mean**
	$PM_{2.5}$ AAQS			**NA**	**35**	**12**
012-073-0012	110 Century Park Circle West	2012	Jan-Dec	21.6	18.0	8.7
	Tallahassee, FL	2013	Jan-Dec	22.6	20.1	7.9
		2014	Jan-Dec	24.3	20.7	9.4
		3-Yr Average			19.6	8.7

Note: NA = not applicable.
AAQS = ambient air quality standard.

[a] The 24-hour $PM_{2.5}$ standard is met when the 3-year average of the 98th percentile of the daily values is less than 35 µg/m³.

[b] The annual $PM_{2.5}$ standard is met when the 3-year average of the annual mean values is less than 12 µg/m³.

Source: FDEP Quicklook Reports, 2012-2014.

Table 6-1: Structure Dimensions Used in the Modeling Analysis

		Height		Length		Width	
BPIP Building ID	Desciption	**(ft)**	**(m)**	**(ft)**	**(m)**	**(ft)**	**(m)**
Existing Structures							
UNIT1BLD	Unit 1 Main Level	73.0	22.3	284.0	86.6	114.0	34.7
UNIT1BLD	Unit 1 Upper Level	125.3	38.2	66.4	20.2	58.7	17.9
UNIT1STH	Unit 1 Southern Tier	32.0	9.8	95.0	29.0	48.2	14.7
UNIT1LO	Unit 2 Lower Level	24.0	7.3	65.2	19.9	27.4	8.4
UNIT2HI	Unit 2 Upper Level	177.5	54.1	111.9	34.1	75.6	23.0
UNIT2MID	Unit 2 Mid Level	107.3	32.7	87.8	26.8	57.2	17.4
UNIT2LO	Unit 2 Lower Level	73.0	22.3	69.0	21.0	12.8	3.9
HRSGBLDG	HRSG Building	93.8	28.6	120.4	36.7	34.7	10.6
CTINLET1	CT Air Intake	65.1	19.8	27.4	8.4	15.5	4.7
CHILLER	Chiller	29.5	9.0	75.0	22.9	56.0	17.1
LM60001LO	LM6000(1) - Lower	22.5	6.9	44.0	13.4	33.0	10.1
LM60001HI	LM6000(1) - Upper	59.0	18.0	45.8	14.0	13.5	4.1
LM60002LO	LM6000(2) - Lower	22.5	6.9	44.0	13.4	33.0	10.1
LM60002HI	LM6000(2) - Upper	59.0	18.0	45.8	14.0	13.5	4.1
SWITCHYD	Switch Yard Bldg	20.0	6.1	58.6	17.9	24.5	7.5
DEMINWH	Demin WH	26.0	7.9	202.8	61.8	61.8	18.8
WH	Warehouse	26.0	7.9	99.3	30.3	77.4	23.6
COOLTOW2	Cooling Tower 2	32.0	9.8	38.5	11.7	72.5	22.1
COOLTOW1	Cooling Tower 1	32.0	9.8	191.0	58.2	40.6	12.4
Proposed Structures							
WARTENG	Wartsila Engine Blgd	44.5	13.6	147.9	45.1	110.3	33.6

Table 6-2: Summary of the $PM_{2.5}$ Sources Considered for Inclusion in the Air Modeling Analyses

Facility ID	Facility Description	Site	UTM Coordinates Zone 16 East (km)	UTM Coordinates Zone 16 North (km)	Relative to COT Hopkins Facility [a] X (km)	Relative to COT Hopkins Facility [a] Y (km)	Relative to COT Hopkins Facility [a] Distance (km)	Relative to COT Hopkins Facility [a] Direction (deg)	Potential $PM_{2.5}$ Emissions (TPY)	Q, (TPY) Emission Threshold [b,c] (Dist - SID) x 20	Include in Modeling Analysis ? [b]
Modeling Area [a]											
0730003	CITY OF TALLAHASSEE	ARVAH B. HOPKINS GENERATING STATION	747.2	3371.5	-2.6	-0.1	0.00	0	769.5	SIA	YES
Beyond Modeling Area [a]											
7770100	C.W. ROBERTS CONTRACTING, INC.	TALLAHASSEE ASPHALT PLANT	752.7	3370.8	2.9	-0.8	3.01	105	2.0	35.2	NO
0730068	FAIRCHILD CREMATION SERVICES INC	CAPITAL CITY CREMATORY	754.2	3373.6	4.4	2.0	4.82	65	1.9	71.4	NO
7775144	PEAVY & SON CONSTRUCTION CO INC	MIDWAY ASPHALT PLANT	744.6	3375.0	-5.2	3.4	6.21	303	0.4	99.1	NO
0730010	FLORIDA STATE UNIVERSITY	FLORIDA STATE UNIVERSITY	759.5	3370.9	9.7	-0.7	9.74	94	6.9	169.8	NO
0730113	CITY OF TALLAHASSEE	T P SMITH WRF	757.1	3365.1	7.3	-6.5	9.75	132	2.0	170.1	NO
0730076	NORTH FLORIDA ANIMAL HOSPITAL	NORTH FLORIDA ANIMAL HOSPITAL	759.1	3375.0	9.3	3.4	9.86	70	2.1	172.2	NO
0730009	FLORIDA A&M UNIVERSITY	PHYSICAL PLANT/CENTRAL HEATING PLANT	760.5	3368.9	10.7	-2.7	11.04	104	2.6	195.7	NO
0730062	DEPARTMENT OF MANAGEMENT SERVICES	DEPARTMENT OF MANAGEMENT SERVICES	760.9	3370.2	11.1	-1.4	11.19	97	0.1	198.8	NO
PROPOSED	TALLAHASSEE MUNICIPAL HEALTHCARE	2 MODEL 20V34SG WARTSILA ENGINES	763.0	3373.0	13.2	1.3	13.25	84	18.4	240.0	NO
0730042	SERVICE CORPORATION INTERNATIONAL (SCI)	CULLEY'S MEADOW WOOD CREMATORY	765.0	3373.2	15.2	1.6	15.29	84	0.4	280.7	NO
0730034	MITCHELL BROTHERS, INC.	MITCHELL BROTHERS, INC.	766.2	3372.1	16.4	0.5	16.41	88	3.5	303.2	NO
0730099	LEON COUNTY BOARD OF COUNTY COMM'S	LEON CTY SOLID WASTE MANAGEMENT FACILITY	771.1	3368.9	21.3	-2.7	21.50	97	10.0	405.0	NO
0390041	ACTIVE MINERALS INTERNATIONAL, LLC	ACTIVE MINERALS INT LLC - ATTAPULGITE DI	731.0	3384.0	-18.8	12.4	22.52	303	9.6	425.4	NO
0390009	COASTAL FOREST RESOURCES COMPANY	COASTAL FOREST HAVANA PLYWOOD PLANT	745.2	3394.1	-4.6	22.5	22.99	348	158.0	434.8	NO
0390005	BASF CORPORATION	QUINCY OPERATIONS	732.6	3387.5	-17.2	15.9	23.42	313	284.8	443.5	NO
0390030	IMERYS PERLITE USA, INC	IMERYS PERLITE USA INC	729.8	3385.2	-20.0	13.6	24.19	304	34.8	458.7	NO
0390006	HIGDON FURNITURE CO	HIGDON FURNITURE CO	729.7	3386.5	-20.1	14.9	25.02	307	23.0	475.4	NO
0390025	ARGOS USA	QUINCY READY MIX PLANT	726.9	3382.4	-22.9	10.8	25.27	295	14.2	480.4	NO
0730114	JOHNSTONE AG & RECYCLING	THE BARN	775.6	3374.1	25.8	2.5	25.96	84	16.3	494.2	NO
0390029	FLORIDA GAS TRANSMISSION COMPANY	COMPRESSOR STATION NO. 14	720.0	3377.4	-29.8	5.8	30.39	281	16.0	582.7	NO
0390045	CDS MANUFACTURING INC	CDS-FDOT CASTING YARD	723.8	3387.7	-26.0	16.1	30.56	302	5.0	586.2	NO
0390039	FORTERRA PIPE & PRECAST, LLC.	FORTERRA PIPE & PRECAST - GRETNA	724.2	3389.1	-25.6	17.5	31.01	304	0.0	595.3	NO
1290003	ST. MARKS POWDER, INC. A GENERAL DYNAMIC	ST. MARKS POWDER	767.6	3342.4	17.8	-29.2	34.16	149	35.4	658.2	NO
1290001	TALLAHASSEE CITY PURDOM GENERATING STA.	TALLAHASSEE CITY PURDOM GENERATING STA.	766.8	3339.9	17.0	-31.7	36.01	152	94.9	695.1	NO
0770010	GEORGIA PACIFIC WOOD PRODUCTS LLC	G-P WOOD PRODUCTS LLC (HOSFORD OSB)	713.8	3369.5	-36.0	-2.1	36.06	267	105.2	696.2	NO
0650004	ARGOS USA	LLOYD READY MIX PLANT	785.8	3375.5	36.0	3.9	36.24	84	0.8	699.9	NO
7774811	C. W. ROBERTS CONTRACTING, INC.	HOSFORD ASPHALT PLANT	711.0	3365.2	-38.8	-6.4	39.37	261	1.5	762.4	NO
0770009	MULTITRADE BIOMASS HOLDINGS, LLC	TELOGIA POWER, LLC	707.7	3357.8	-42.1	-13.8	44.33	252	48.4	861.6	NO
Georgia											
08700037	BASF CATALYSTS LLC		739.9	3403.2	-9.9	31.6	33.06	343	203.4	636.1	NO
08700053	BAINBRIDGE POWER FACILITY		734.4	3422.3	-15.4	50.7	53.01	343	9.8	1035.3	NO

Note: SID = Significant impact distance for the project

COT Hopkins 4 Wartsila Engines Locations East and North Coordinates (km) are approximately: 749.80 km 3371.6 km

The 24-hour PM2.5 significant impact distance for the project is estimated to be: 1.25 km

[a] "Modeling Area" is the area in which the project is predicted to have a significant impact (1.25 km). All sources within the modeling area were included in the analysis.

[b] In general, sources beyond the modeling areas were included if the emission rate in TPY > Q where Q = Distance x (20-SIA). Also, sources with PTE> 100 TPY and located within 10 km were included.

Table 6-3: Summary of Background $PM_{2.5}$ Sources Included in the NAAQS Modeling Analysis

Facility ID	Facility Name / Emission Unit Description	EU ID	Modeling ID Name	UTM Location X (m)	UTM Location Y (m)	Stack Parameters Height ft	Height m	Diameter ft	Diameter m	Temperature °F	Temperature K	Velocity ft/s	Velocity m/s	Stack Parameter Data Source	$PM_{2.5}$ Emission Rate (lb/hr)	$PM_{2.5}$ Emission Rate (g/s)	Emissions Data Source
0730003	COT A.B. Hopkins Generating Station																
	Boiler #1(Phase II Acid Rain Unit)	001	BLR1	749,670	3,371,772	200.0	60.96	11.0	3.35	260.0	399.8	39.2	11.9		112.9	14.22	Title V Permit 0730003-014-AV
	GE LM6000 Sprint Combustion Turbine HC3 with Inlet Chilling	031	HC3	749,849	3,371,676	85.0	25.91	10.0	3.05	825.0	713.7	127.6	38.9	January 2017 from FDEP Query Report	14.9	1.88	January 2017 from FDEP
	GE LM6000 Sprint Combustion Turbine HC4 with Inlet Chilling	032	HC4	749,910	3,371,677	85.0	25.91	10.0	3.05	825.0	713.7	127.6	38.9		14.9	1.88	January 2017 from FDEP
	GE 7FA CT Combined Cycle Mode	033	HP2ACC	749,657	3,371,873	150.0	45.72	18.0	5.49	188.0	359.8	66.6	20.3		25.6	3.22	January 2017 from FDEP

Notes:
All emission rates are based on worst case emission/impact scenario.

Table 6-4: Maximum Concentrations Predicted for Emissions of One 18MW Wartsila Engine Firing Natural Gas

	Maximum Emission Rates (lb/hr) by Operating Load			Averaging		Maximum Concentrations (µg/m^3) by Load [a]		
	Base Load	70% Load	40% Load	Time		Base Load	70% Load	40% Load
Generic[b]	79.37	79.37	79.37	Annual	c	2.36	2.89	3.46
(10 g/s - 2.5 g/s per engine)				Annual	d	1.83	2.24	2.68
				24-Hour	c	15.54	19.46	24.38
				24-Hour	d	14.42	17.64	21.22
				8-Hour	c	43.78	55.30	66.30
				3-Hour	c	66.56	80.48	96.37
				1-Hour	c	73.27	84.40	116.69
				1-Hour	e	72.37	83.76	109.15
Emissions for 1 Engine								
PM_{10}	3.17	2.48	2.15	Annual	c	0.09	0.09	0.09
				24-Hour	c	0.62	0.61	0.66
$PM_{2.5}$	3.17	2.48	2.15	Annual	d	0.07	0.07	0.07
				24-Hour	d	0.58	0.55	0.57

[a] Concentrations are based on highest predicted concentrations from AERMOD using five years of meteorological data for 2010 to 2014 consisting of surface and upper air data from the National Weather Service stations at Tallahassee Regional AP and Slidell, LA, respectively.

[b] Pollutant concentrations were based on a modeled or generic concentration predicted using a modeled emission rate of 79.37 lb/hr (10 g/s) for 4 engines. Pollutant-specific concentrations for 1 engine were then determined by multiplying the predicted concentration by the ratio of the pollutant-specific emission rate divided by the modeled emission rate of 10 g/s.

[c] Based on the highest concentration of any year (2010-2014).

[d] Based on highest 5-year average concentration (2010-2014).

[e] Based on highest 5-year average daily maximum 1-hour concentration (2010-2014).

Table 6-5: Summary of Maximum Concentrations Predicted For Four 18MW Wartsila Engines on Natural Gas Compared to the EPA Class II SIL

Pollutant	Averaging Time	Maximum Predicted Concentration [a] ($\mu g/m^3$)	Receptor Location UTM- East (m)	Receptor Location UTM- North (m)	Time Period (YYMMDDHH)	EPA Class II Significant Impact Levels ($\mu g/m^3$)
PM_{10}	Annual	0.4	750,141	3,371,202	10123124	1
	24-Hour	2.6	750,141	3,371,202	11121524	5
$PM_{2.5}$	Annual	0.29	750,141	3,371,202	5 Year Avg.	0.3
	24-Hour	2.3	750,141	3,371,202	5 Year Avg.	1.2

Note: YYMMDDHH = Year, Month, Day, Hour Ending

[a] Concentrations are based on concentrations predicted using 5 years of meteorological data from 2010 to 2014 of surface and upper air data from the National Weather Service stations at Tallahassee International Airport (TLH) and Slidell, LA, respectively.

Table 6-6: Maximum Predicted 24-Hour $PM_{2.5}$ Impacts for All Sources Compared to the NAAQS

Averaging Time and Rank	Maximum Concentration ($\mu g/m^3$) [a]			Receptor Location		Time Period (YYMMDDHH)	AAQS ($\mu g/m^3$)
	Total	Modeled Sources	Background	UTM- East (m)	UTM- North (m)		
24-Hour, 98th Percentile	29.3	9.3	20.0	750,136	3,371,325	5-year average	35

Note: YYMMDDHH = Year, Month, Day, Hour Ending

[a] Concentrations are based on concentrations predicted using 5 years of meteorological data from 2010 to 2014 of surface and upper air data from the National Weather Service stations at Tallahassee International Airport (TLH) and Slidell, LA, respectively.

Table 6-7: Maximum Predicted 24-Hour $PM_{2.5}$ Impacts Compared to the Allowable PSD Class II Increment

Averaging Time and Rank	Maximum Predicted Concentration [a] ($\mu g/m^3$)	Receptor Location UTM- East (m)	Receptor Location UTM- North (m)	Time Period (YYMMDDHH)	PSD Class II Increment ($\mu g/m^3$)
24-Hour, HSH	2.5	750,141	3,371,202	14111124	9

Note: YYMMDDHH = Year, Month, Day, Hour Ending
HSH = Highest, second-highest
NA = Not Applicable

[a] Concentrations are based on concentrations predicted using 5 years of meteorological data from 2010 to 2014 of surface and upper air data from the National Weather Service stations at Tallahassee International Airport (TLH) and Slidell, Louisiana, respectively.

Table 6-8: Maximum Predicted Impacts for the Project Only Compared to EPA Class I Significant Impact Levels

Pollutant	Averaging Time	Maximum Predicted Concentration [a] ($\mu g/m^3$)	Receptor Location UTM- East (m)	Receptor Location UTM- North (m)	Time Period (YYMMDDHH)	EPA Class I Significant Impact Levels ($\mu g/m^3$)
at Bradwell Bay NWA						
PM_{10}	Annual	0.0030	736,996	3,346,563	14123124	0.2
	24-Hour	0.08	737,838	3,344,733	13121124	0.3
$PM_{2.5}$	Annual	0.003	736,996	3,346,563	5-yr aver.	0.06
	24-Hour	0.044	737,838	3,344,733	5-yr aver.	0.07
at sections of Saint Marks NWA located within 50 km						
	Annual	0.003	769,315	3,338,066	14123124	0.2
	24-Hour	0.057	780,676	3,333,728	10011024	0.3
$PM_{2.5}$	Annual	0.003	769,315	3,338,066	5-yr aver.	0.06
	24-Hour	0.039	780,676	3,333,728	5-yr aver.	0.07
at 50-Km Ring Distance [b]						
PM_{10}	Annual	0.005	-	-	13123124	0.2
	24-Hour	0.090	-	-	11121724	0.3
$PM_{2.5}$	Annual	0.004	-	-	5-yr aver.	0.06
	24-Hour	0.064	-	-	5-yr aver.	0.07

Note: YYMMDDHH = Year, Month, Day, Hour Ending

[a] Concentrations are based on concentrations predicted using 5 years of meteorological data from 2010 to 2014 of surface and upper air data from the National Weather Service stations at Tallahassee International Airport (TLH) and Slidell, LA, respectively.

Table 7-1: SO_2 Effects Levels for Various Plant Species

Plant Species	Observed Effect Level ($\mu g/m^3$)	Exposure (Time)	Reference
Sensitive to tolerant	920 (20 percent displayed visible injury)	3 hours	McLaughlin and Lee, 1974
Lichens	200-400	6 hr/wk for 10 weeks	Hart *et al.*, 1988
Cypress, slash pine, live oak, mangrove	1,300	8 hours	Woltz and Howe, 1981
Jack pine seedlings	470-520	24 hours	Malhotra and Kahn, 1978
Black oak	1,310	Continuously for 1 week	Carlson, 1979

Table 7-2: Sensitivity Groupings of Vegetation Based on Visible Injury at Different SO_2 Exposures [a]

Sensitivity Grouping	SO_2 Concentration		Plants
	1-Hour	3-Hour	
Sensitive	1,310 - 2,620 µg/m^3 (0.5 - 1.0 ppm)	790 - 1,570 µg/m^3 (0.3 - 0.6 ppm)	Ragweeds Legumes Blackberry Southern pines Red and black oaks White ash Sumacs
Intermediate	2,620 - 5,240 µg/m^3 (1.0 - 2.0 ppm)	1,570 - 2,100 µg/m^3 (0.6 - 0.8 ppm)	Maples Locust Sweetgum Cherry Elms Tuliptree Many crop and garden species
Resistant	>5,240 µg/m^3 (>2.0 ppm)	>2,100 µg/m^3 (>0.8 ppm)	White oaks Potato Upland cotton Corn Dogwood Peach

[a] Based on observations over a 20-year period of visible injury occurring on over 120 species growing in the vicinities of coal-fired power plants in the southeastern United States.

Source: EPA, 1982a.

Table 7-3: Examples of Reported Effects of Air Pollutants at Concentrations below National Secondary AAQS

Pollutant	Reported Effect	Concentration ($\mu g/m^3$)	Exposure
Sulfur Dioxide[a]	Respiratory stress in guinea pigs	427 to 854	1 hour
	Respiratory stress in rats	267	7 hours/day; 5 day/week for 10 weeks
	Decreased abundance in deer mice	13 to 157	continually for 5 months
Nitrogen Dioxide[b,c]	Respiratory stress in mice	1,917	3 hours
	Respiratory stress in guinea pigs	96 to 958	8 hours/day for 122 days
Particulates[a]	Respiratory stress, reduced respiratory disease defenses	120 PbO_3	continually for 2 months
	Decreased respiratory disease defenses in rats, same with hamsters	100 $NiCl_2$	2 hours

Sources:
[a] Newman and Schreiber, 1988.
[b] Gardner and Graham, 1976.
[c] Trzeciak et al., 1977.

FIGURES

LEGEND

- Proposed Project Location
- Property Boundary

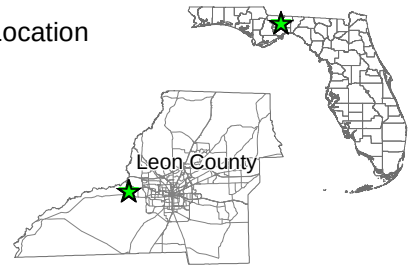

REFERENCE(S)

1. PROPERTY BOUNDARY, FLORIDA DEPARTMENT OF REVENUE, 2015.

COORDINATE SYSTEM: NAD 1983 UTM ZONE 16N
PROJECTION: TRANSVERSE MERCATOR
DATUM: NORTH AMERICAN 1983

CLIENT
CITY OF TALLAHASSEE

PROJECT
HOPKINS GENERATING STATION

TITLE
LOCATION OF PROPOSED PROJECT AT THE A.B. HOPKINS STATION

CONSULTANT
Golder Associates

YYYY-MM-DD	2016-09-27
DESIGNED	GFD
PREPARED	GFD
REVIEWED	SM
APPROVED	KK

PROJECT NO.	CONTROL	REV.	FIGURE
1655646	A002	0	1-1

PATH: G:\PROJECTS\City of Tallahassee\Hopkins Generating Station\09 PROJECTS\1655646 AB Hopkins Plant\1655646 A AirModeling\02 PRODUCTION\MXD\1655646 A002 Proposed Project Site.mxd
IF THIS MEASUREMENT DOES NOT MATCH WHAT IS SHOWN, THE SHEET SIZE HAS BEEN MODIFIED FROM: ANSI A
25mm
0

Figure 7-1
Visual Effects Screening Analysis for
Source: 4 COT Wartsila 18Mw Engines
Class I Area: St. Marks NWA

*** Level-1 Screening ***

Input Emissions for

Particulates	12.68	LB /HR
NOx (as NO2)	9.76	LB /HR
Primary NO2	0.00	LB /HR
Soot	0.00	LB /HR
Primary SO4	0.51	LB /HR

**** Default Particle Characteristics Assumed

Transport Scenario Specifications:

Background Ozone:	0.04 ppm
Background Visual Range:	190.00 km
Source-Observer Distance:	38.60 km
Min. Source-Class I Distance:	38.60 km
Max. Source-Class I Distance:	58.00 km
Plume-Source-Observer Angle:	11.25 degrees
Stability:	6
Wind Speed:	1.00 m/s

R E S U L T S

Asterisks (*) indicate plume impacts that exceed screening criteria

Maximum Visual Impacts INSIDE Class I Area
Screening Criteria ARE Exceeded

					Delta E		Contrast	
Backgrnd	Theta	Azi	Distance	Alpha	Crit	Plume	Crit	Plume
SKY	10.	148.	58.0	20.	2.00	1.350	0.05	0.026
SKY	140.	148.	58.0	20.	2.00	0.315	0.05	-0.011
TERRAIN	10.	84.	38.6	84.	2.00	2.889*	0.05	0.021
TERRAIN	140.	84.	38.6	84.	2.00	0.174	0.05	0.003

Maximum Visual Impacts OUTSIDE Class I Area
Screening Criteria ARE Exceeded

					Delta E		Contrast	
Backgrnd	Theta	Azi	Distance	Alpha	Crit	Plume	Crit	Plume
SKY	10.	0.	1.0	168.	2.00	12.521*	0.05	0.228*
SKY	140.	0.	1.0	168.	2.00	2.917*	0.05	-0.098*
TERRAIN	10.	0.	1.0	168.	2.00	17.488*	0.05	0.183*
TERRAIN	140.	0.	1.0	168.	2.00	3.576*	0.05	0.084*

APPENDIX A

PERFORMANCE AND EMISSIONS INFORMATION AND CALCULATIONS

TABLE A-1
DESIGN INFORMATION AND STACK PARAMETERS FOR EACH ENGINE
WARTSILA MODEL 18V50SG, NATURAL GAS

	Engine Different Loads		
Parameter	**100%**	**70%**	**40%**
Operating Case	**Case 3**	**Case 4**	**Case 5**
Combustion Turbine Performance			
Gross Output (kW)	18,817.0	13,174.0	7,484.0
Net Heat Rate (Btu/kWh, LHV)	7,359.0	7,736.0	8,480.0
Net Heat Rate (Btu/kWh, HHV)	6,629.7	6,969.4	7,639.6
Heat Input (MMBtu/hr, LHV)	138.5	101.9	63.5
(MMBtu/hr, HHV)	153.7	113.1	70.4
Fuel heating value (Btu/lb, LHV)	19,956	19,956	19,956
(Btu/lb, HHV)	22,151	22,151	22,151
(HHV/LHV)	1.11	1.11	1.11
Fuel Usage			
Heat content (Btu/cf, LHV)	950	950	950
Fuel density (lb/ft^3)	0.0476	0.0476	0.0476
Fuel usage (lb/hr)	6,939	5,107	3,180
Fuel usage (cf/hr)	145,762	107,278	66,805
Stack Parameters			
Stack Height (feet)	75	75	75
Diameter (feet)	5.25	5.25	5.25
Stack Flow Conditions			
Velocity (ft/sec) = Volume flow (acfm) / [((diameter)^2 /4) x 3.14159] / 60 sec/min			
Exhaust Temperature (^{o}F)	684	754	822
Volume flow (acfm)	122,962	92,555	60,034
Velocity (ft/sec)- calculated	94.7	71.3	46.2

Source: Wartsila 2016; Golder, 2016.

TABLE A-2
MAXIMUM EMISSIONS FOR CRITERIA POLLUTANTS FOR EACH ENGINE
WARTSILA MODEL 18V50SG, NATURAL GAS

	Engine Different Loads		
Parameter	**100%**	**70%**	**40%**
Operating Case	**Case 3**	**Case 4**	**Case 5**
Particulate Matter			
Stack emission rate (lb/hr)	3.17	2.48	2.15
Emission Rate (lb/mmBtu, HHV)	0.0206	0.0219	0.0305
Sulfur Dioxide			
SO_2 (lb/hr)= Natural gas (scf/hr) x sulfur content(gr/100 scf) x 1 lb/7000 gr x (lb SO_2 /lb S) /100			
Fuel use (cf/hr)	145,762	107,278	66,805
Sulfur content (grains/ 100 cf)	2	2	2
lb SO_2 /lb S (64/32)	2	2	2
HRSG stack emission rate (lb/hr)	0.83	0.61	0.38
Nitrogen Oxides			
Stack emission rate (lb/hr)	2.44	1.91	1.10
Emission Rate (lb/mmBtu, HHV)	0.016	0.017	0.016
Carbon Monoxide			
Stack emission rate (lb/hr)	4.96	3.88	2.24
Emission Rate (lb/mmBtu, HHV)	0.032	0.034	0.032
Volatile Organic Compounds			
Stack emission rate (lb/hr)	4.92	3.85	3.60
Emission Rate (lb/mmBtu, HHV)	0.032	0.034	0.051
Sulfuric Acid Mist			
Sulfuric Acid Mist (lb/hr)= SO_2 emission (lb/hr) x Conversion to H_2SO_4 (% by weight)/100			
SO_2 emission rate (lb/hr)	0.83	0.61	0.38
Conversion to H_2SO_4 (% by weight)	10	10	10
HRSG Stack emission rate (lb/hr)	0.128	0.094	0.058

Source: Wartsila, 2016; Golder, 2016.

TABLE A-3
HAZARDOUS AIR POLLUTANT EMISSION FACTORS AND EMISSIONS FOR THE CITY OF TALLAHASSEE RICE PROJECT
WARTSILA MODEL 18V50SG, FIRING NATURAL GAS

Parameter	Controlled Emission Factors 4SLB Gas Engines (lb/MMBtu)		Emission Rate (lb/hr) One Engine - Base Load	Maximum Annual Emissions (TPY) One Engine - Base Load	Maximum Annual Emissions (TPY) Four Engines - Base Load
HAPs [Section 112(b) of Clean Air Act]					
1,1,2,2-Tetrachloroethane	4.00E-06	a	6.15E-04	2.69E-03	1.08E-02
1,1,2-Trichloroethan	3.18E-06	a	4.89E-04	2.14E-03	8.56E-03
1,3-Butadiene	2.67E-05	a	4.10E-03	1.80E-02	7.19E-02
1,3-Dichloropropene	2.64E-06	a	4.06E-04	1.78E-03	7.11E-03
2-Methylnaphthalene	3.32E-06	a	5.10E-04	2.24E-03	8.94E-03
2,2,4-Trimethylpentane	2.50E-05	a	3.84E-03	1.68E-02	6.73E-02
Acenaphthene	1.25E-07	a	1.92E-05	8.42E-05	3.37E-04
Acetaldehyde	3.38E-03	b	5.20E-01	2.28E+00	9.11E+00
Acrolein	4.30E-03	b	6.61E-01	2.90E+00	1.16E+01
Benzene	4.40E-05	a	6.76E-03	2.96E-02	1.18E-01
Benzo(e)pyrene	4.15E-08	a	6.38E-06	2.79E-05	1.12E-04
Benzo(b)fluoranthene	1.66E-08	a	2.55E-06	1.12E-05	4.47E-05
Benzo(g,h,i)perylene	4.14E-08	a	6.36E-06	2.79E-05	1.11E-04
Biphenyl	2.12E-05	a	3.26E-03	1.43E-02	5.71E-02
Carbon Tetrachloride	3.67E-06	a	5.64E-04	2.47E-03	9.88E-03
Chlorobenzene	3.04E-06	a	4.67E-04	2.05E-03	8.19E-03
Chloroform	2.85E-06	a	4.38E-04	1.92E-03	7.67E-03
Chrysene	6.93E-08	a	1.07E-05	4.67E-05	1.87E-04
Ethylbenzene	3.97E-06	a	6.10E-04	2.67E-03	1.07E-02
Ethylene Dibromide	4.43E-06	a	6.81E-04	2.98E-03	1.19E-02
Fluoranthene	1.11E-07	a	1.71E-05	7.47E-05	2.99E-04
Fluorene	5.67E-07	a	8.72E-05	3.82E-04	1.53E-03
Formaldehyde	1.63E-03	b	2.50E-01	1.10E+00	4.39E+00
Methanol	1.72E-03	b	2.65E-01	1.16E+00	4.64E+00
Methylene Chloride	2.00E-06	a	3.07E-04	1.35E-03	5.39E-03
n-Hexane	1.11E-04	a	1.71E-02	7.47E-02	2.99E-01
Naphthalene	7.44E-08	a	1.14E-05	5.01E-05	2.00E-04
Phenanathrene	1.04E-06	a	1.60E-04	7.00E-04	2.80E-03
Phenol	2.40E-06	a	3.69E-04	1.62E-03	6.46E-03
Pyrene	1.36E-07	a	2.09E-05	9.16E-05	3.66E-04
Styrene	2.36E-06	a	3.63E-04	1.59E-03	6.36E-03
Tetrachloroethan	2.48E-07	a	3.81E-05	1.67E-04	6.68E-04
Toluene	4.08E-05	a	6.27E-03	2.75E-02	1.10E-01
Vinyl Chloride	1.49E-06	a	2.29E-04	1.00E-03	4.01E-03
Xylene	1.84E-05	a	2.83E-03	1.24E-02	4.96E-02
HAPs (Total)			1.74	7.61	30.45

[a] Based on AP-42, Table 3.2-2 Uncontrolled Emission Factors for 4-stroke Lean Burn Engines with 90% control using an oxidation catalyst.
Maximum Heat Input Rate (HHV, MMBtu/hr): 153.7

[b] Wartsila, 2017.

TABLE A-4
GREENHOUSE GAS (GHG) EMISSIONS
BASE LOAD
WARTSILA MODEL 18V50SG, FIRING NATURAL GAS [a]

	One Engine			Four Engines		
Pollutant	**Emission Rate (lb/hr) at Base Load [b]**	**Maximum Annual GHG Emissions (TPY) [c]**	**Maximum Annual CO_2e Emissions (TPY) [c,d]**	**Emission Rate (lb/hr) at Base Load [b]**	**Maximum Annual GHG Emissions (TPY) [c]**	**Maximum Annual CO_2e Emissions (TPY) [c]**
CO_2	18,269	80,019	80,019	73,076	320074.47	320,074.5
CH_4	0.339	1.484	37.10	1.36	5.94	148.38
N_2O	0.034	0.148	44.22	0.14	0.59	176.87
Total		80,020	80,100		320,081	320,399.7

[a] Heat Input Rate (HHV, MMBtu/hr): 153.7

[b] CO_2 based on 40 CFR Part 75 Appendix G, Section 2.3.
CH_4 and N_2O based on Table C-2, Subpart C, 40 CFR 98. Emission factors in lb/MMBtu

Pollutant	Natural Gas
CO_2	118.9
CH_4	2.20E-03
N_2O	2.20E-04

[c] CH_4 and N_2O are multiplied by CO_2e factor based on 40 CFR Part 98.

Pollutant	CO_2e Factor
CH_4	25
N_2O	298

Title:	Flue gas emission data City of Tallahassee, Hopkins Site	**Doc.ID:**	DBAE230812
		Revision:	a
Author:	Riitta Raudaskoski	**Status:**	Finalised
Finalised by:	Riitta Raudaskoski / 17.03.2017	**Pages:**	1 (3)
Organisation:	- General Energy Solutions		
Project:	– Project information		

This document provides flue gas emissions, i.e. maximum average values for emissions measured over a period of minimum 60 minutes. The emissions are based on the site conditions, gas composition and measurement methods specified in this document.

Engine: Wärtsilä® 18V50SG-A, 514 rpm (constant speed)

Site conditions:

Altitude	328	ft
Ambient temperature	67.5	°F
Relative humidity	78	%

Gas composition:

The emissions are valid for following gas composition. It is understood that variations in the gas composition inside this specification will occur and are permitted; however sudden extreme changes in gas temperature, pressure or composition are not allowed.

Methane number:		89		
Methane	CH_4	95.424	mol-%	
Ethane, max	C_2H_6	2.740	mol-%	
Propane, max	C_3H_8	0.182	mol-%	Note 1)
i-Butane, max	C_4H_{10}	0.021	mol-%	Note 1)
n-Butane, max	C_4H_{10}	0.023	mol-%	Note 1)
Pentane, max	C_5H_{12}	0.011	mol-%	Note 1)
Hexane and higher hydro carbons, max	C_6H_{14}	0.014	mol-%	Note 1)
Nitrogen	N_2	0.476	mol-%	
Carbon dioxide	CO_2	1.109	mol-%	
Carbon monoxide	CO	0.000	mol-%	
Total sulphur, max S		5	mg/kg	

Other gas parameters according to Wärtsilä's specification. Aromatic hydrocarbons, silicon based compounds or impurities resulting from the operating and maintenance of the gas delivery systems are not allowed.

Lubricating oil quality according to Wärtsilä specifications for gas engines.

Note 1) VOC emissions in gas operation depend on the composition of the pipeline natural gas. This document includes a table with corrected VOC emissions after the emission control system for natural gas with concentrations of C_3 to C_6 hydrocarbons in excess of the values specified above.

Flue gas emissions after emission control system[Note2] at steady full (100%) engine loads:

NO_X (as NO_2)	ppm-v, 15% O_2, dry	5
CO	ppm-v, 15% O_2, dry	15
VOC (as CH_4)	ppm-v, 15% O_2, dry	26
PM10 (total)[Note3]	mg/Nm^3, 15% O_2, dry	12
PM2.5 (total)[Note3]	mg/Nm^3, 15% O_2, dry	12
NH_3	ppm-v, 15% O_2, dry	10

Nm^3 defined at 32ºF and 101.3 kPa (abs.)

Correction based upon the influence of gas composition on VOC emissions:

If the concentration = sum of propane + butane + pentane + hexane (C_3H_8 + C_4H_{10} + C_5H_{12} + C_6H_{14}) in the pipeline natural gas exceed the values specified in paragraph *"Gas composition"* in this document the VOC emissions shall be corrected according to the table below. In the table the sum of propane + butane + pentane + hexane is denoted C_{GasVOC}.

	Factor for VOC correction
Actual Fuel Gas CGasVOC	**(VOC number guarantee * factor)**
0 vol-%<=CgasVOC<0.50 vol%	1.0
0.50 vol-%<=CgasVOC<1.00 vol%	1.3
1.00 vol-%<=CgasVOC<1.50 vol%	1.6

Time to reach compliance

The time required to reach compliance with the emission levels specified in this document will depend on operating conditions and on the temperature of the catalyst system at start. Compliance with emission data in this document will for a normal start sequence and under normal conditions be reached within 10 to 30 minutes from start signal. The emission data in this document are given for stable load operation at the continuous operating loads specified in this document.

Measurement methods

Emission data provided in this document is based upon the emission measurement methods listed below.

Emission data assumes that individual compounds identified above the sensitivity limit, but at concentrations below the lower limit of detection are reported as maximum one-half of the daily lower-limit of calibration. Measurements shall be performed so that minimum feasible detection limits are achieved if this is required for determining compliance with emission guarantees.

The flue gas stack emission measurements will be performed at steady operating condition of the engine. Prior to the start of the flue gas emission (stack) measurements, the engine shall have

Note2) Minimum allowed engine load equipped with emission control system is 40%
Note3) All PM emissions are considered to be PM2.5, the total PM value is NOT the sum of the two PM values

reached steady state operating conditions and the flue gas temperature measured after the emission control system shall be allowed to reach normal operating temperature.

Sufficiently long measurement sampling periods and number of samples shall be taken in order to get statistically representative results. To ensure accurate particulate matter (PM10) emission results of 3 samples are to be collected with a minimum sampling time of 1 hour per sample. Based on the judgement of the measurement consultant, the results of individual samples with abnormally high deviation shall be excluded.

The plant average result of all the tested engines is calculated from the engine-specific average results. The plant average result shall be used to verify the fulfilment of the guarantee. In case the plant average result is not in compliance with the guarantee value, the engine(s) causing the non-compliance with high engine-specific average results as per the evaluation and decision by Wärtsilä, shall be checked and adjusted. The flue gas emissions of those re-adjusted engine(s) shall be re-tested according to the same guidelines as used in the original emission tests.

Oxygen (O_2): EPA Method 3A (USA): Determination of Oxygen and Carbon Dioxide Emissions from Stationary Sources.

Nitrogen oxides (NO_X): EPA Method 7E (USA): Determination of nitrogen oxides from stationary sources.

Carbon monoxide (CO): EPA Method 10 (USA): Determination of carbon monoxide emissions from stationary sources.

Volatile organic compounds (VOC defined as Non Methane Non Ethane Hydrocarbons): USA EPA Method 18: Measurement of gaseous organic compound emissions by gas chromatography. VOC is calculated as the sum of relevant components, which for a gas engine equipped with a high efficiency catalyst are considered to be: propane, n-butane, n-pentane (only if existing in NG fuel), n-hexane (only if existing in NG fuel) and ethylene.

PM_{10} (total): Total PM_{10} is defined as the sum of the particulate matter measured with a combination of EPA 5B and 202 methods. USA EPA Method 5B (front half): Determination of particulate emissions from stationary sources USA EPA Method 202 Determination of condensable particulate matter from stationary sources. Since pipeline siloxane condensate may contaminate the particulate samples siloxane sampling from the fuel gas line is to be performed during emission testing.

Ammonia (NH_3): Bay Area Air Quality Management District (BAAQMD) test Method ST-1B: Ammonia integrated sampling.

Based upon mutual written consent, evaluation of emission levels can be made using alternative methods.

APPENDIX B

BASELINE ACTUAL INFORMATION FOR UNIT 1

Table B-1. Arvah B. Hopkins Generating Station Unit 1 Annual Heat Inputs and Operating Hours, 2012 - 2016

Year	Heat Input from Residual Oil (MMBtu/yr)	Heat Input from Natural Gas (MMBtu/yr)	Total Actual Heat Input (MMBtu/yr)
2016	0	2,117,485	2,117,485
2015	0	1,981,026	1,981,026
2014	0	1,854,639	1,854,639
2013	0	1,812,736	1,812,736
2012	0	1,607,174	1,607,174

Note: All values are based on annual operating reports for the period 2011 - 2015.

Table B-2. Annual Emissions Reported in 20011-2015 Annual Operating Reports and Acid Rain Database for Unit 1

Year	Pollutant	Unit 1 (tons)
2016	NO_x	201.6
	CO	86.9
	SO_2	0.7
	VOC	5.7
	PM	7.9
	PM_{10}	7.9
	$PM_{2.5}$	7.9
	SAM [a]	0.11
	CO_2	135,382.0
2015	NO_x	174.70
	CO	80.70
	SO_2	0.60
	VOC	5.28
	PM	7.53
	PM_{10}	7.53
	$PM_{2.5}$	1.83
	SAM [a]	0.09
	CO_2	117,729.5
2014	NO_x	158.5
	CO	76.6
	SO_2	0.6
	VOC	5.02
	PM	7.87
	PM_{10}	7.87
	$PM_{2.5}$	1.73
	SAM [a]	0.09
	CO_2	111,340.4
2013	NO_x	143.7
	CO	74.9
	SO_2	0.4
	VOC	4.90
	PM	6.8
	PM_{10}	6.8
	$PM_{2.5}$	1.7
	SAM [a]	0.06
	CO_2	104,503.9
2012	NO_x	115.2
	CO	64.9
	SO_2	0.4
	VOC	4.25
	PM	5.87
	PM_{10}	5.87
	$PM_{2.5}$	1.47
	SAM [a]	0.06
	CO_2	82,164.2

[a] Not reported in AORs - based on assuming 10% of SO_2 converts to SO_3, all of which converts to SAM.

Source: Annual Operating Report (AOR) for Hopkins Plant, 2012 - 2016; EPA's Acid Rain database.

Table B-3. Actual Annual Emissions of N_2O and CH_4 for the Period 2011 - 2015
Unit 1

Unit	Actual Annual Heat Input [a] (MMBtu/yr)	N_2O Emissions Emission Factor [b] (lb/MMBtu)	N_2O Emissions Annual Emissions (lb/yr)	N_2O Emissions Annual Emissions (TPY)	N_2O Emissions CO_2e [c] Rate (TPY)	CH_4 Emissions Emission Factor [b] (lb/MMBtu)	CH_4 Emissions Annual Emissions (lb/yr)	CH_4 Emissions Annual Emissions (TPY)	CH_4 Emissions CO_2e [c] Rate (TPY)
Natural Gas-Firing									
2016	2,117,485	2.20E-04	466.7	0.233	69.5	2.2E-03	4,666.9	2.3	58.3
2015	1,981,026	2.20E-04	436.6	0.218	65.1	2.2E-03	4,366.2	2.2	54.6
2014	1,854,639	2.20E-04	408.8	0.204	60.9	2.2E-03	4,087.6	2.0	51.1
2013	1,812,736	2.20E-04	399.5	0.200	59.5	2.2E-03	3,995.3	2.0	49.9
2012	1,607,174	2.20E-04	354.2	0.177	52.8	2.2E-03	3,542.2	1.8	44.3
Residual Oil-Firing									
2016	0	1.3E-03	0.0	0.00	0.0	6.6E-03	0.0	0.0	0.0
2015	0	1.3E-03	0.0	0.00	0.0	6.6E-03	0.0	0.0	0.0
2014	0	1.3E-03	0.0	0.00	0.0	6.6E-03	0.0	0.0	0.0
2013	0	1.3E-03	0.0	0.00	0.0	6.6E-03	0.0	0.0	0.0
2012	0	1.3E-03	0.0	0.00	0.0	6.6E-03	0.0	0.0	0.0
Total									
2016	--	--	--	0.233	69.5	--	--	2.3	58.3
2015	--	--	--	0.218	65.1	--	--	2.2	54.6
2014	--	--	--	0.204	60.9	--	--	2.0	51.1
2013	--	--	--	0.200	59.5	--	--	2.0	49.9
2012	--	--	--	0.177	52.8	--	--	1.8	44.3

[a] Based on AOR data - see Table 1.
[b] Table C-2, Subpart C, 40 CFR 98. Emission factors in kg/MMBtu were converted to lb/MMBtu by multiplying by 2.204.
[c] N_2O and CH_4 are multiplied by a factor of 298 and 25, respectively, to determine CO_2 equivalence.

APPENDIX C

FDEP FORM NO. 62-210-900(1): APPLICATION FOR AIR PERMIT – LONG FORM

Department of
Environmental Protection

Division of Air Resource Management

APPLICATION FOR AIR PERMIT - LONG FORM

I. APPLICATION INFORMATION

Air Construction Permit – Use this form to apply for an air construction permit:

- For any required purpose at a facility operating under a federally enforceable state air operation permit (FESOP) or Title V air operation permit;
- For a proposed project subject to prevention of significant deterioration (PSD) review, nonattainment new source review, or maximum achievable control technology (MACT);
- To assume a restriction on the potential emissions of one or more pollutants to escape a requirement such as PSD review, nonattainment new source review, MACT, or Title V; or
- To establish, revise, or renew a plantwide applicability limit (PAL).

Air Operation Permit – Use this form to apply for:

- An initial federally enforceable state air operation permit (FESOP); or
- An initial, revised, or renewal Title V air operation permit.

To ensure accuracy, please see form instructions.

Identification of Facility

1. Facility Owner/Company Name: **City of Tallahassee**	
2. Site Name: **Arvah B. Hopkins Generating Station**	
3. Facility Identification Number: **0730003**	
4. Facility Location... Street Address or Other Locator: **Route 4, Box 450, 1125 Geddie Road (County Road 1585)** City: **Tallahassee** County: **Leon** Zip Code: **32304**	
5. Relocatable Facility? ☐ Yes ☒ No	6. Existing Title V Permitted Facility? ☒ Yes ☐ No

Application Contact

1. Application Contact Name: **Russell Wider, Environmental Engineer**
2. Application Contact Mailing Address... Organization/Firm: **City of Tallahassee** Street Address: **300 South Adams Street, A-10** City: **Tallahassee** State: **FL** Zip Code: **32301**
3. Application Contact Telephone Numbers... Telephone: **(850) 891-8710** ext. Fax: **(850) 891-8277**
4. Application Contact E-mail Address: **russell.wider@talgov.com**

Application Processing Information (DEP Use)

1. Date of Receipt of Application:	3. PSD Number (if applicable):
2. Project Number(s):	4. Siting Number (if applicable):

APPLICATION INFORMATION

Purpose of Application

This application for air permit is being submitted to obtain: (Check one)

Air Construction Permit

☒ Air construction permit.

☐ Air construction permit to establish, revise, or renew a plantwide applicability limit (PAL).

☐ Air construction permit to establish, revise, or renew a plantwide applicability limit (PAL), and separate air construction permit to authorize construction or modification of one or more emissions units covered by the PAL.

Air Operation Permit

☐ Initial Title V air operation permit.

☐ Title V air operation permit revision.

☐ Title V air operation permit renewal.

☐ Initial federally enforceable state air operation permit (FESOP) where professional engineer (PE) certification is required.

☐ Initial federally enforceable state air operation permit (FESOP) where professional engineer (PE) certification is not required.

Air Construction Permit and Revised/Renewal Title V Air Operation Permit (Concurrent Processing)

☐ Air construction permit and Title V permit revision, incorporating the proposed project.

☐ Air construction permit and Title V permit renewal, incorporating the proposed project.

Note: By checking one of the above two boxes, you, the applicant, are requesting concurrent processing pursuant to Rule 62-213.405, F.A.C. In such case, you must also check the following box:

☐ I hereby request that the department waive the processing time requirements of the air construction permit to accommodate the processing time frames of the Title V air operation permit.

Application Comment

This Air Construction/Prevention of Significant Deterioration (PSD) Permit application is for the construction of four Wartsila Model 18V50SG natural gas fired generators that produce 18.82 MW at 100 percent load. The Wartsila Model 18V50SG engine is the world's largest four-stroke spark-ignited gas engine with each engine equipped with SCR to control emissions of NO2 and an oxidation catalyst to control emissions of CO and VOCs. As part of the Project, the City of Tallahassee plans on retiring Unit 1 (EU 001) as well as two small combustion turbines (EU 002 and 003). See Part II.

APPLICATION INFORMATION

Scope of Application

Emissions Unit ID Number	Description of Emissions Unit	Air Permit Type	Air Permit Processing Fee
	Four Wartsila Model 18V50SG Gas Engines	AC1A	$7,500

Application Processing Fee

Check one: ☒ Attached - Amount: $ $7,500 ☐ Not Applicable

APPLICATION INFORMATION

Owner/Authorized Representative Statement

Complete if applying for an air construction permit or an initial FESOP.

1. Owner/Authorized Representative Name :
   Triveni Singh, Production Manager

2. Owner/Authorized Representative Mailing Address...
   Organization/Firm: **City of Tallahassee**
   Street Address: **2602 Jackson Bluff Road**
   City: **Tallahassee** State: **FL** Zip Code: **32304**

3. Owner/Authorized Representative Telephone Numbers...
   Telephone: **(850) 891-5532** ext. Fax: **(850) 891-5162**

4. Owner/Authorized Representative E-mail Address: **triveni.singh@talgov.com**

5. Owner/Authorized Representative Statement:

   I, the undersigned, am the owner or authorized representative of the corporation, partnership, or other legal entity submitting this air permit application. To the best of my knowledge, the statements made in this application are true, accurate and complete, and any estimates of emissions reported in this application are based upon reasonable techniques for calculating emissions. I understand that a permit, if granted by the department, cannot be transferred without authorization from the department.

   Triveni Singh
   Signature

   4/28/17
   Date

APPLICATION INFORMATION

Application Responsible Official Certification

Complete if applying for an initial, revised, or renewal Title V air operation permit or concurrent processing of an air construction permit and revised or renewal Title V air operation permit. If there are multiple responsible officials, the "application responsible official" need not be the "primary responsible official."

1. Application Responsible Official Name:

2. Application Responsible Official Qualification (Check one or more of the following options, as applicable):
   - ☐ For a corporation, the president, secretary, treasurer, or vice-president of the corporation in charge of a principal business function, or any other person who performs similar policy or decision-making functions for the corporation, or a duly authorized representative of such person if the representative is responsible for the overall operation of one or more manufacturing, production, or operating facilities applying for or subject to a permit under Chapter 62-213, F.A.C.
   - ☐ For a partnership or sole proprietorship, a general partner or the proprietor, respectively.
   - ☐ For a municipality, county, state, federal, or other public agency, either a principal executive officer or ranking elected official.
   - ☐ The designated representative at an Acid Rain source or CAIR source.

3. Application Responsible Official Mailing Address...
   Organization/Firm:
   Street Address:
   City: State: Zip Code:

4. Application Responsible Official Telephone Numbers...
   Telephone: ( ) ext. Fax: ( )

5. Application Responsible Official E-mail Address:

6. Application Responsible Official Certification:

I, the undersigned, am a responsible official of the Title V source addressed in this air permit application. I hereby certify, based on information and belief formed after reasonable inquiry, that the statements made in this application are true, accurate and complete and that, to the best of my knowledge, any estimates of emissions reported in this application are based upon reasonable techniques for calculating emissions. The air pollutant emissions units and air pollution control equipment described in this application will be operated and maintained so as to comply with all applicable standards for control of air pollutant emissions found in the statutes of the State of Florida and rules of the Department of Environmental Protection and revisions thereof and all other applicable requirements identified in this application to which the Title V source is subject. I understand that a permit, if granted by the department, cannot be transferred without authorization from the department, and I will promptly notify the department upon sale or legal transfer of the facility or any permitted emissions unit. Finally, I certify that the facility and each emissions unit are in compliance with all applicable requirements to which they are subject, except as identified in compliance plan(s) submitted with this application.

_____ _____
Signature Date

APPLICATION INFORMATION

Professional Engineer Certification

1. Professional Engineer Name: **Kennard F. Kosky**
   Registration Number: **14996**
2. Professional Engineer Mailing Address...
   Organization/Firm: **Golder Associates Inc.****
   Street Address: **6026 NW 1st Place**
   City: **Gainesville** State: **FL** Zip Code: **32607**
3. Professional Engineer Telephone Numbers...
   Telephone: **(352) 336-5600** ext. Fax: **(352) 336-6603**
4. Professional Engineer E-mail Address: **kkosky@golder.com**
5. Professional Engineer Statement:

I, the undersigned, hereby certify, except as particularly noted herein, that:*

(1) To the best of my knowledge, there is reasonable assurance that the air pollutant emissions unit(s) and the air pollution control equipment described in this application for air permit, when properly operated and maintained, will comply with all applicable standards for control of air pollutant emissions found in the Florida Statutes and rules of the Department of Environmental Protection; and

(2) To the best of my knowledge, any emission estimates reported or relied on in this application are true, accurate, and complete and are either based upon reasonable techniques available for calculating emissions or, for emission estimates of hazardous air pollutants not regulated for an emissions unit addressed in this application, based solely upon the materials, information and calculations submitted with this application.

(3) If the purpose of this application is to obtain a Title V air operation permit (check here ☐, if so), I further certify that each emissions unit described in this application for air permit, when properly operated and maintained, will comply with the applicable requirements identified in this application to which the unit is subject, except those emissions units for which a compliance plan and schedule is submitted with this application.

(4) If the purpose of this application is to obtain an air construction permit (check here ☒, if so) or concurrently process and obtain an air construction permit and a Title V air operation permit revision or renewal for one or more proposed new or modified emissions units (check here ☐, if so), I further certify that the engineering features of each such emissions unit described in this application have been designed or examined by me or individuals under my direct supervision and found to be in conformity with sound engineering principles applicable to the control of emissions of the air pollutants characterized in this application.

(5) If the purpose of this application is to obtain an initial air operation permit or operation permit revision or renewal for one or more newly constructed or modified emissions units (check here ☐, if so), I further certify that, with the exception of any changes detailed as part of this application, each such emissions unit has been constructed or modified in substantial accordance with the information given in the corresponding application for air construction permit and with all provisions contained in such permit.

Signature 4/25/17 Date

(Seal)

KENNARD F. KOSKY LICENSE No. 14996 STATE OF FLORIDA PROFESSIONAL ENGINEER

* Attach any exception to certification statement.
**Board of Professional Engineers Certificate of Authorization #00001670.

II. FACILITY INFORMATION

A. GENERAL FACILITY INFORMATION

Facility Location and Type

1. Facility UTM Coordinates... Zone **16** East (km) **749.53** North (km) **3371.7**		2. Facility Latitude/Longitude... Latitude (DD/MM/SS) **30/27/8 N** Longitude (DD/MM/SS) **84/24/0 W**	
3. Governmental Facility Code: **4**	4. Facility Status Code:	5. Facility Major Group SIC Code: **49**	6. Facility SIC(s): **4911**
7. Facility Comment : **Considered a major source under FDEP PSD rules.**			

Facility Contact

1. Facility Contact Name: **Russell A. Wider, Environmental Engineer**
2. Facility Contact Mailing Address... Organization/Firm: **City of Tallahassee, Environmental Resources Division** Street Address: **300 South Adams Street, A-10** City: **Tallahassee** State: **FL** Zip Code: **32301**
3. Facility Contact Telephone Numbers: Telephone: **(850) 891-8710** ext. Fax: **(850) 891-8277**
4. Facility Contact E-mail Address: **russell.wider@tal.gov.com**

Facility Primary Responsible Official

Complete if an "application responsible official" is identified in Section I that is not the facility "primary responsible official."

1. Facility Primary Responsible Official Name: **Triveni Singh, Production Manager**
2. Facility Primary Responsible Official Mailing Address... Organization/Firm: **City of Tallahassee** Street Address: **2602 Jackson Bluff Road** City: **Tallahassee** State: **FL** Zip Code: **32304**
3. Facility Primary Responsible Official Telephone Numbers... Telephone: **(850) 891-5532** ext. Fax: **(850) 891-5162**
4. Facility Primary Responsible Official E-mail Address: **triveni.singh@talgov.com**

Facility Regulatory Classifications

Check all that would apply *following* completion of all projects and implementation of all other changes proposed in this application for air permit. Refer to instructions to distinguish between a "major source" and a "synthetic minor source."

1. ☐ Small Business Stationary Source	☐ Unknown
2. ☐ Synthetic Non-Title V Source	
3. ☒ Title V Source	
4. ☐ Major Source of Air Pollutants, Other than Hazardous Air Pollutants (HAPs)	
5. ☐ Synthetic Minor Source of Air Pollutants, Other than HAPs	
6. ☒ Major Source of Hazardous Air Pollutants (HAPs)	
7. ☐ Synthetic Minor Source of HAPs	
8. ☒ One or More Emissions Units Subject to NSPS (40 CFR Part 60)	
9. ☒ One or More Emissions Units Subject to Emission Guidelines (40 CFR Part 60)	
10. ☒ One or More Emissions Units Subject to NESHAP (40 CFR Part 61 or Part 63)	
11. ☐ Title V Source Solely by EPA Designation (40 CFR 70.3(a)(5))	
12. Facility Regulatory Classifications Comment: **NSPS: 40 CFR Part 60; Subparts GG and KKKK** **NESHAPS: 40 CFR Part 63; Subparts YYYY and ZZZZ** **Acid Rain: 40 CFR Part 75**	

List of Pollutants Emitted by Facility

1. Pollutant Emitted	2. Pollutant Classification	3. Emissions Cap [Y or N]?
CO	**A**	**N**
PM10	**A**	**N**
NOx	**A**	**N**
VOC	**A**	**N**
PM	**A**	**N**
SO2	**A**	**N**

B. EMISSIONS CAPS

Facility-Wide or Multi-Unit Emissions Caps

1. Pollutant Subject to Emissions Cap	2. Facility-Wide Cap [Y or N]? (all units)	3. Emissions Unit ID's Under Cap (if not all units)	4. Hourly Cap (lb/hr)	5. Annual Cap (ton/yr)	6. Basis for Emissions Cap
7. Facility-Wide or Multi-Unit Emissions Cap Comment:					

C. FACILITY ADDITIONAL INFORMATION

Additional Requirements for All Applications, Except as Otherwise Stated

1.	Facility Plot Plan: (Required for all permit applications, except Title V air operation permit revision applications if this information was submitted to the department within the previous five years and would not be altered as a result of the revision being sought) ☐ Attached, Document ID:_____ ☒ Previously Submitted, Date: May 2012
2.	Process Flow Diagram(s): (Required for all permit applications, except Title V air operation permit revision applications if this information was submitted to the department within the previous five years and would not be altered as a result of the revision being sought) ☐ Attached, Document ID:_____ ☒ Previously Submitted, Date: May 2012
3.	Precautions to Prevent Emissions of Unconfined Particulate Matter: (Required for all permit applications, except Title V air operation permit revision applications if this information was submitted to the department within the previous five years and would not be altered as a result of the revision being sought) ☐ Attached, Document ID:_____ ☒ Previously Submitted, Date: May 2012

Additional Requirements for Air Construction Permit Applications

1.	Area Map Showing Facility Location: ☒ Attached, Document ID:_____ ☐ Not Applicable (existing permitted facility)
2.	Description of Proposed Construction, Modification, or Plantwide Applicability Limit (PAL): ☒ Attached, Document ID:_____
3.	Rule Applicability Analysis: ☒ Attached, Document ID:_____
4.	List of Exempt Emissions Units: ☐ Attached, Document ID:_____ ☐ Not Applicable (no exempt units at facility)
5.	Fugitive Emissions Identification: ☐ Attached, Document ID:_____ ☐ Not Applicable
6.	Air Quality Analysis (Rule 62-212.400(7), F.A.C.): ☒ Attached, Document ID:_____ ☐ Not Applicable
7.	Source Impact Analysis (Rule 62-212.400(5), F.A.C.): ☒ Attached, Document ID:_____ ☐ Not Applicable
8.	Air Quality Impact since 1977 (Rule 62-212.400(4)(e), F.A.C.): ☐ Attached, Document ID:_____ ☐ Not Applicable
9.	Additional Impact Analyses (Rules 62-212.400(8) and 62-212.500(4)(e), F.A.C.): ☒ Attached, Document ID:_____ ☐ Not Applicable
10.	Alternative Analysis Requirement (Rule 62-212.500(4)(g), F.A.C.): ☐ Attached, Document ID:_____ ☐ Not Applicable

C. FACILITY ADDITIONAL INFORMATION (CONTINUED)

Additional Requirements for FESOP Applications

1. List of Exempt Emissions Units: ☐ Attached, Document ID:_____ ☐ Not Applicable (no exempt units at facility)

Additional Requirements for Title V Air Operation Permit Applications

1. List of Insignificant Activities: (Required for initial/renewal applications only) ☐ Attached, Document ID:_____ ☐ Not Applicable (revision application)
2. Identification of Applicable Requirements: (Required for initial/renewal applications, and for revision applications if this information would be changed as a result of the revision being sought) ☐ Attached, Document ID:_____ ☐ Not Applicable (revision application with no change in applicable requirements)
3. Compliance Report and Plan: (Required for all initial/revision/renewal applications) ☐ Attached, Document ID:_____ Note: A compliance plan must be submitted for each emissions unit that is not in compliance with all applicable requirements at the time of application and/or at any time during application processing. The department must be notified of any changes in compliance status during application processing.
4. List of Equipment/Activities Regulated under Title VI: (If applicable, required for initial/renewal applications only) ☐ Attached, Document ID:_____ ☐ Equipment/Activities Onsite but Not Required to be Individually Listed ☐ Not Applicable
5. Verification of Risk Management Plan Submission to EPA: (If applicable, required for initial/renewal applications only) ☐ Attached, Document ID:_____ ☐ Not Applicable
6. Requested Changes to Current Title V Air Operation Permit: ☐ Attached, Document ID:_____ ☐ Not Applicable

C. FACILITY ADDITIONAL INFORMATION (CONTINUED)

Additional Requirements for Facilities Subject to Acid Rain, CAIR, or Hg Budget Program

1. Acid Rain Program Forms:

   Acid Rain Part Application (DEP Form No. 62-210.900(1)(a)):
   ☐ Attached, Document ID:_____ ☒ Previously Submitted, Date: May 2012
   ☐ Not Applicable (not an Acid Rain source)

   Phase II NO_X Averaging Plan (DEP Form No. 62-210.900(1)(a)1.):
   ☐ Attached, Document ID:_____ ☐ Previously Submitted, Date:_____
   ☐ Not Applicable

   New Unit Exemption (DEP Form No. 62-210.900(1)(a)2.):
   ☐ Attached, Document ID:_____ ☐ Previously Submitted, Date:_____
   ☐ Not Applicable

2. CAIR Part (DEP Form No. 62-210.900(1)(b)):
   ☐ Attached, Document ID:_____ ☒ Previously Submitted, Date: May 2012
   ☐ Not Applicable (not a CAIR source)

Additional Requirements Comment

III. EMISSIONS UNIT INFORMATION

Title V Air Operation Permit Application - For Title V air operation permitting only, emissions units are classified as regulated, unregulated, or insignificant. If this is an application for an initial, revised or renewal Title V air operation permit, a separate Emissions Unit Information Section (including subsections A through I as required) must be completed for each regulated and unregulated emissions unit addressed in this application. Some of the subsections comprising the Emissions Unit Information Section of the form are optional for unregulated emissions units. Each such subsection is appropriately marked. Insignificant emissions units are required to be listed at Section II, Subsection C.

Air Construction Permit or FESOP Application - For air construction permitting or federally enforceable state air operation permitting, emissions units are classified as either subject to air permitting or exempt from air permitting. The concept of an "unregulated emissions unit" does not apply. If this is an application for an air construction permit or FESOP, a separate Emissions Unit Information Section (including subsections A through I as required) must be completed for each emissions unit subject to air permitting addressed in this application for air permit. Emissions units exempt from air permitting are required to be listed at Section II, Subsection C.

Air Construction Permit and Revised/Renewal Title V Air Operation Permit Application – Where this application is used to apply for both an air construction permit and a revised or renewal Title V air operation permit, each emissions unit is classified as either subject to air permitting or exempt from air permitting for air construction permitting purposes, and as regulated, unregulated, or insignificant for Title V air operation permitting purposes. A separate Emissions Unit Information Section (including subsections A through I as required) must be completed for each emissions unit addressed in this application that is subject to air construction permitting and for each such emissions unit that is a regulated or unregulated unit for purposes of Title V permitting. (An emissions unit may be exempt from air construction permitting but still be classified as an unregulated unit for Title V purposes.) Emissions units classified as insignificant for Title V purposes are required to be listed at Section II, Subsection C.

If submitting the application form in hard copy, the number of this Emissions Unit Information Section and the total number of Emissions Unit Information Sections submitted as part of this application must be indicated in the space provided at the top of each page.

EMISSIONS UNIT INFORMATION
Section [1]
Wartsila 18V50SG gas engines 1 through 4

A. GENERAL EMISSIONS UNIT INFORMATION

Title V Air Operation Permit Emissions Unit Classification

1. Regulated or Unregulated Emissions Unit? (Check one, if applying for an initial, revised or renewal Title V air operation permit. Skip this item if applying for an air construction permit or FESOP only.)

   ☒ The emissions unit addressed in this Emissions Unit Information Section is a regulated emissions unit.
   ☐ The emissions unit addressed in this Emissions Unit Information Section is an unregulated emissions unit.

Emissions Unit Description and Status

1. Type of Emissions Unit Addressed in this Section: (Check one)

   ☐ This Emissions Unit Information Section addresses, as a single emissions unit, a single process or production unit, or activity, which produces one or more air pollutants and which has at least one definable emission point (stack or vent).

   ☒ This Emissions Unit Information Section addresses, as a single emissions unit, a group of process or production units and activities which has at least one definable emission point (stack or vent) but may also produce fugitive emissions.

   ☐ This Emissions Unit Information Section addresses, as a single emissions unit, one or more process or production units and activities which produce fugitive emissions only.

2. Description of Emissions Unit Addressed in this Section:
   Four identical Wartsila 18V50SG gas engines.

3. Emissions Unit Identification Number:

4. Emissions Unit Status Code:	5. Commence Construction Date:	6. Initial Startup Date:	7. Emissions Unit Major Group SIC Code:
C	**June 2017**		**49**

8. Federal Program Applicability: (Check all that apply)

   ☐ Acid Rain Unit
   ☐ CAIR Unit

9. Package Unit:
   Manufacturer: **Wartsila** Model Number: **18V50SG**

10. Generator Nameplate Rating: **18.82** MW/engine

11. Emissions Unit Comment:
    Four identical four-stroke lean-burn internal combustion engines and generator sets, which will burn natural gas to generate total 75.28 MW of electricity (gross, 18.82 MW per engine).

EMISSIONS UNIT INFORMATION
Section [1]
Wartsila 18V5-SG gas engines 1 through 4

Emissions Unit Control Equipment/Method: Control **1** of **2**

1. Control Equipment/Method Description: **Selective Catalytic Reduction**
2. Control Device or Method Code: **139**

Emissions Unit Control Equipment/Method: Control **2** of **2**

1. Control Equipment/Method Description: **Catalytic Oxidation**
2. Control Device or Method Code: **109**

Emissions Unit Control Equipment/Method: Control ____ of ____

1. Control Equipment/Method Description:
2. Control Device or Method Code:

Emissions Unit Control Equipment/Method: Control ____ of ____

1. Control Equipment/Method Description:
2. Control Device or Method Code:

B. EMISSIONS UNIT CAPACITY INFORMATION
(Optional for unregulated emissions units.)

Emissions Unit Operating Capacity and Schedule

1. Maximum Process or Throughput Rate:		
2. Maximum Production Rate:		
3. Maximum Heat Input Rate: **614.8** million Btu/hr		
4. Maximum Incineration Rate:	pounds/hr tons/day	
5. Requested Maximum Operating Schedule:	**24** hours/day **52** weeks/year	**7** days/week **8,760** hours/year
6. Operating Capacity/Schedule Comment: **See Air Report.** **Maximum heat input rate for one engine = 153.7 MMBtu/hr** **Maximum heat input rate for 4 engines = 153.7 MMBtu/hr x 4 = 614.8 MMBtu/hr**		

C. EMISSION POINT (STACK/VENT) INFORMATION
(Optional for unregulated emissions units.)

Emission Point Description and Type

1. Identification of Point on Plot Plan or Flow Diagram: **Wartsila Engines 1-4**		2. Emission Point Type Code: **3**
3. Descriptions of Emission Points Comprising this Emissions Unit for VE Tracking: **Each engine will have a separate stack**		
4. ID Numbers or Descriptions of Emission Units with this Emission Point in Common:		
5. Discharge Type Code: **V**	6. Stack Height: **75** feet	7. Exit Diameter: **5.25** feet
8. Exit Temperature: **684**°F	9. Actual Volumetric Flow Rate: **122,962** scfm	10. Water Vapor: %
11. Maximum Dry Standard Flow Rate: dscfm		12. Nonstack Emission Point Height: feet
13. Emission Point UTM Coordinates... Zone: East (km): North (km):		14. Emission Point Latitude/Longitude… Latitude (DD/MM/SS) Longitude (DD/MM/SS)
15. Emission Point Comment: **See Air Report for physical properties. Stack parameters are for each engine.**		

D. SEGMENT (PROCESS/FUEL) INFORMATION

Segment Description and Rate: Segment **1** of **1**

1. Segment Description (Process/Fuel Type): **Internal Combustion Engines – Electric Generation; Natural Gas; Reciprocating**		
2. Source Classification Code (SCC): **2-01-002-02**	3. SCC Units: **MM Cubic Feet Burned**	
4. Maximum Hourly Rate: **0.583**	5. Maximum Annual Rate: **5,107.5**	6. Estimated Annual Activity Factor:
7. Maximum % Sulfur:	8. Maximum % Ash:	9. Million Btu per SCC Unit: **950 (LHV)**
10. Segment Comment: **Maximum hourly rate = 145,762 scf x (1/1,000,000) x 4 engines = 0.583 MMft^3/hr** **Maximum annual rate = 0.583 MMft^3/hr x 8,760 hr/yr = 5,107.5 MMft^3/yr**		

Segment Description and Rate: Segment _____ of _____

1. Segment Description (Process/Fuel Type):		
2. Source Classification Code (SCC):	3. SCC Units:	
4. Maximum Hourly Rate:	5. Maximum Annual Rate:	6. Estimated Annual Activity Factor:
7. Maximum % Sulfur:	8. Maximum % Ash:	9. Million Btu per SCC Unit:
10. Segment Comment:		

EMISSIONS UNIT INFORMATION
Section [1]
Wartsila 18V50SG gas engines 1 through 4

E. EMISSIONS UNIT POLLUTANTS

List of Pollutants Emitted by Emissions Unit

1. Pollutant Emitted	2. Primary Control Device Code	3. Secondary Control Device Code	4. Pollutant Regulatory Code
NOx	139		EL
CO	109		EL
SO2			NS
VOC	109		EL
PM10/PM2.5			EL
H095-Formaldehyde	109		EL

F1. EMISSIONS UNIT POLLUTANT DETAIL INFORMATION – POTENTIAL, FUGITIVE, AND ACTUAL EMISSIONS

(Optional for unregulated emissions units.)

Complete a Subsection F1 for each pollutant identified in Subsection E if applying for an air construction permit or concurrent processing of an air construction permit and a revised or renewal Title V operation permit. Complete for each emissions-limited pollutant identified in Subsection E if applying for an air operation permit.

Potential, Estimated Fugitive, and Baseline & Projected Actual Emissions

1. Pollutant Emitted: **NOx**	2. Total Percent Efficiency of Control:
3. Potential Emissions: **2.44** lb/hour **10.69** tons/year	4. Synthetically Limited? ☐ Yes ☒ No
5. Range of Estimated Fugitive Emissions (as applicable): to tons/year	
6. Emission Factor: **5 ppmvd @ 15% O_2** Reference: **Design basis**	7. Emissions Method Code: **2**
8.a. Baseline Actual Emissions (if required): **188.15** tons/year	8.b. Baseline 24-month Period: From: **2015** To: **2016**
9.a. Projected Actual Emissions (if required): tons/year	9.b. Projected Monitoring Period: ☐ 5 years ☐ 10 years
10. Calculation of Emissions: **See PSD Report, Table 2-1**	
11. Potential, Fugitive, and Actual Emissions Comment: **Potential emissions for each engine.**	

F2. EMISSIONS UNIT POLLUTANT DETAIL INFORMATION - ALLOWABLE EMISSIONS

Complete Subsection F2 if the pollutant identified in Subsection F1 is or would be subject to a numerical emissions limitation.

Allowable Emissions Allowable Emissions **1** of **2**

1. Basis for Allowable Emissions Code: **OTHER**	2. Future Effective Date of Allowable Emissions:
3. Allowable Emissions and Units: **2.44 lb/hr**	4. Equivalent Allowable Emissions: **2.44** lb/hour **10.69** tons/year
5. Method of Compliance: **Initial testing each engine using EPA Method 7 or 7E; annual testing of one engine**	
6. Allowable Emissions Comment (Description of Operating Method):	

Allowable Emissions Allowable Emissions **1** of **2**

1. Basis for Allowable Emissions Code: **RULE**	2. Future Effective Date of Allowable Emissions:
3. Allowable Emissions and Units: **1.0 g/bhp-hr**	4. Equivalent Allowable Emissions: **48.8** lb/hour **213.7** tons/year
5. Method of Compliance: **Pursuant to 40 CFR 60.4243(b)(2)(ii) (Initial testing and every 8,760 hours operation or 3 years, whichever comes first.)**	
6. Allowable Emissions Comment (Description of Operating Method): **40 CFR Part 60 Subpart JJJJ limit.** **Allowable emissions applicable if manufactured after July 1, 2010.**	

Allowable Emissions Allowable Emissions _____ of _____

1. Basis for Allowable Emissions Code:	2. Future Effective Date of Allowable Emissions:
3. Allowable Emissions and Units:	4. Equivalent Allowable Emissions: lb/hour tons/year
5. Method of Compliance:	
6. Allowable Emissions Comment (Description of Operating Method):	

F1. EMISSIONS UNIT POLLUTANT DETAIL INFORMATION – POTENTIAL, FUGITIVE, AND ACTUAL EMISSIONS

(Optional for unregulated emissions units.)

Complete a Subsection F1 for each pollutant identified in Subsection E if applying for an air construction permit or concurrent processing of an air construction permit and a revised or renewal Title V operation permit. Complete for each emissions-limited pollutant identified in Subsection E if applying for an air operation permit.

Potential, Estimated Fugitive, and Baseline & Projected Actual Emissions

1. Pollutant Emitted: **Carbon Monoxide- CO**	2. Total Percent Efficiency of Control:
3. Potential Emissions: **4.96** lb/hour **21.7** tons/year	4. Synthetically Limited? ☐ Yes ☒ No
5. Range of Estimated Fugitive Emissions (as applicable): to tons/year	
6. Emission Factor: **15 ppmvd @ 15% O_2** Reference: **Design basis**	7. Emissions Method Code: **2**
8.a. Baseline Actual Emissions (if required): **83.78** tons/year	8.b. Baseline 24-month Period: From: **2015** To: **2016**
9.a. Projected Actual Emissions (if required): tons/year	9.b. Projected Monitoring Period: ☐ 5 years ☐ 10 years
10. Calculation of Emissions: **See PSD Report, Table 2-1**	
11. Potential, Fugitive, and Actual Emissions Comment: **Potential emissions for each engine.**	

F2. EMISSIONS UNIT POLLUTANT DETAIL INFORMATION - ALLOWABLE EMISSIONS

Complete Subsection F2 if the pollutant identified in Subsection F1 is or would be subject to a numerical emissions limitation.

Allowable Emissions Allowable Emissions **2** of **2**

1. Basis for Allowable Emissions Code: **OTHER**	2. Future Effective Date of Allowable Emissions:
3. Allowable Emissions and Units: **4.96 lb/hr**	4. Equivalent Allowable Emissions: **4.96** lb/hour **21.7** tons/year
5. Method of Compliance: **Initial test of each using EPA Method 10; annual test on one engine**	
6. Allowable Emissions Comment (Description of Operating Method): Proposed design limit.	

Allowable Emissions Allowable Emissions **2** of **2**

1. Basis for Allowable Emissions Code: **RULE**	2. Future Effective Date of Allowable Emissions:
3. Allowable Emissions and Units: **2.0 g/bhp-hr**	4. Equivalent Allowable Emissions: **99.2** lb/hour **434.5** tons/year
5. Method of Compliance: **Pursuant to 40 CFR 60.4243(b)(2)(ii) (Initial testing and every 8,760 hours operation or 3 years, whichever comes first.)**	
6. Allowable Emissions Comment (Description of Operating Method): **40 CFR Part 60 Subpart JJJJ limit.** **Allowable emissions applicable if manufactured after July 1, 2010.**	

Allowable Emissions Allowable Emissions _____ of _____

1. Basis for Allowable Emissions Code:	2. Future Effective Date of Allowable Emissions:
3. Allowable Emissions and Units:	4. Equivalent Allowable Emissions: lb/hour tons/year
5. Method of Compliance:	
6. Allowable Emissions Comment (Description of Operating Method):	

F1. EMISSIONS UNIT POLLUTANT DETAIL INFORMATION – POTENTIAL, FUGITIVE, AND ACTUAL EMISSIONS

(Optional for unregulated emissions units.)

Complete a Subsection F1 for each pollutant identified in Subsection E if applying for an air construction permit or concurrent processing of an air construction permit and a revised or renewal Title V operation permit. Complete for each emissions-limited pollutant identified in Subsection E if applying for an air operation permit.

Potential, Estimated Fugitive, and Baseline & Projected Actual Emissions

1. Pollutant Emitted: **Sulfur Dioxide - SO2**	2. Total Percent Efficiency of Control:
3. Potential Emissions: **0.83** lb/hour **3.6** tons/year	4. Synthetically Limited? ☐ Yes ☒ No
5. Range of Estimated Fugitive Emissions (as applicable): to tons/year	
6. Emission Factor: **2 grains S/100 scf** Reference: **Sulfur Content of natural gas**	7. Emissions Method Code: **2**
8.a. Baseline Actual Emissions (if required): **0.7** tons/year	8.b. Baseline 24-month Period: From: **2015** To: **2016**
9.a. Projected Actual Emissions (if required): tons/year	9.b. Projected Monitoring Period: ☐ 5 years ☐ 10 years
10. Calculation of Emissions: **See PSD Report, Table 2-1**	
11. Potential, Fugitive, and Actual Emissions Comment: **Potential emission for each engine.**	

F2. EMISSIONS UNIT POLLUTANT DETAIL INFORMATION - ALLOWABLE EMISSIONS

Complete Subsection F2 if the pollutant identified in Subsection F1 is or would be subject to a numerical emissions limitation.

Allowable Emissions Allowable Emissions _____ of _____

1. Basis for Allowable Emissions Code:	2. Future Effective Date of Allowable Emissions:
3. Allowable Emissions and Units:	4. Equivalent Allowable Emissions: lb/hour tons/year
5. Method of Compliance:	
6. Allowable Emissions Comment (Description of Operating Method):	

Allowable Emissions Allowable Emissions _____ of _____

1. Basis for Allowable Emissions Code:	2. Future Effective Date of Allowable Emissions:
3. Allowable Emissions and Units:	4. Equivalent Allowable Emissions: lb/hour tons/year
5. Method of Compliance:	
6. Allowable Emissions Comment (Description of Operating Method):	

Allowable Emissions Allowable Emissions _____ of _____

1. Basis for Allowable Emissions Code:	2. Future Effective Date of Allowable Emissions:
3. Allowable Emissions and Units:	4. Equivalent Allowable Emissions: lb/hour tons/year
5. Method of Compliance:	
6. Allowable Emissions Comment (Description of Operating Method):	

F1. EMISSIONS UNIT POLLUTANT DETAIL INFORMATION – POTENTIAL, FUGITIVE, AND ACTUAL EMISSIONS

(Optional for unregulated emissions units.)

Complete a Subsection F1 for each pollutant identified in Subsection E if applying for an air construction permit or concurrent processing of an air construction permit and a revised or renewal Title V operation permit. Complete for each emissions-limited pollutant identified in Subsection E if applying for an air operation permit.

Potential, Estimated Fugitive, and Baseline & Projected Actual Emissions

1. Pollutant Emitted: **Volatile Organic Compounds - VOC**	2. Total Percent Efficiency of Control:
3. Potential Emissions: **4.92** lb/hour **21.5** tons/year	4. Synthetically Limited? ☐ Yes ☒ No
5. Range of Estimated Fugitive Emissions (as applicable): to tons/year	
6. Emission Factor: **26 ppmvd @ 15% O_2 as CH_4** Reference: **Design basis**	7. Emissions Method Code: **2**
8.a. Baseline Actual Emissions (if required): **5.49** tons/year	8.b. Baseline 24-month Period: From: **2015** To: **2016**
9.a. Projected Actual Emissions (if required): tons/year	9.b. Projected Monitoring Period: ☐ 5 years ☐ 10 years
10. Calculation of Emissions: **See PSD Report, Table 2-1**	
11. Potential, Fugitive, and Actual Emissions Comment: **Potential emission for each engine.**	

F2. EMISSIONS UNIT POLLUTANT DETAIL INFORMATION - ALLOWABLE EMISSIONS

Complete Subsection F2 if the pollutant identified in Subsection F1 is or would be subject to a numerical emissions limitation.

Allowable Emissions Allowable Emissions **1** of **2**

1. Basis for Allowable Emissions Code: **RULE**	2. Future Effective Date of Allowable Emissions:
3. Allowable Emissions and Units: **1.0 g/bhp-hr**	4. Equivalent Allowable Emissions: **21.5** lb/hour **94.3** tons/year
5. Method of Compliance: **Pursuant to 40 CFR 60.4243(b)(2)(ii) (Initial testing and every 8,760 hours operation or 3 years, whichever comes first.)**	
6. Allowable Emissions Comment (Description of Operating Method): **40 CFR Part 60 Subpart JJJJ limit.** **Allowable emissions applicable if manufactured after July 1, 2010.**	

Allowable Emissions Allowable Emissions **2** of **2**

1. Basis for Allowable Emissions Code: **Other**	2. Future Effective Date of Allowable Emissions:
3. Allowable Emissions and Units: **4.92 lb/hr**	4. Equivalent Allowable Emissions: **4.92** lb/hour **21.5** tons/year
5. Method of Compliance: **Initial test of each using EPA Method 25A; compliance with CO limits.**	
6. Allowable Emissions Comment (Description of Operating Method):	

Allowable Emissions Allowable Emissions _____ of _____

1. Basis for Allowable Emissions Code:	2. Future Effective Date of Allowable Emissions:
3. Allowable Emissions and Units:	4. Equivalent Allowable Emissions: lb/hour tons/year
5. Method of Compliance:	
6. Allowable Emissions Comment (Description of Operating Method):	

F1. EMISSIONS UNIT POLLUTANT DETAIL INFORMATION – POTENTIAL, FUGITIVE, AND ACTUAL EMISSIONS

(Optional for unregulated emissions units.)

Complete a Subsection F1 for each pollutant identified in Subsection E if applying for an air construction permit or concurrent processing of an air construction permit and a revised or renewal Title V operation permit. Complete for each emissions-limited pollutant identified in Subsection E if applying for an air operation permit.

Potential, Estimated Fugitive, and Baseline & Projected Actual Emissions

1. Pollutant Emitted: **Particulate Matter - PM10/PM2.5**	2. Total Percent Efficiency of Control:
3. Potential Emissions: **3.17** lb/hour **13.9** tons/year	4. Synthetically Limited? ☐ Yes ☒ No
5. Range of Estimated Fugitive Emissions (as applicable): to tons/year	
6. Emission Factor: **3.17 lb/hr; 0.08 g/kW-hr** Reference: **Design basis**	7. Emissions Method Code:
8.a. Baseline Actual Emissions (if required): **7.72** tons/year	8.b. Baseline 24-month Period: From: **2015** To: **2016**
9.a. Projected Actual Emissions (if required): tons/year	9.b. Projected Monitoring Period: ☐ 5 years ☐ 10 years
10. Calculation of Emissions: **See PSD Report, Table 2-1**	
11. Potential, Fugitive, and Actual Emissions Comment: **Potential emission for each engine.**	

F2. EMISSIONS UNIT POLLUTANT DETAIL INFORMATION - ALLOWABLE EMISSIONS

Complete Subsection F2 if the pollutant identified in Subsection F1 is or would be subject to a numerical emissions limitation.

Allowable Emissions Allowable Emissions **1** of **1**

1. Basis for Allowable Emissions Code: **OTHER**	2. Future Effective Date of Allowable Emissions:
3. Allowable Emissions and Units: **10% opacity**	4. Equivalent Allowable Emissions: **3.17** lb/hour **13.8** tons/year
5. Method of Compliance: **Annual opacity test using EPA Method 9**	
6. Allowable Emissions Comment (Description of Operating Method): **Proposed BACT limit**	

Allowable Emissions Allowable Emissions _____ of _____

1. Basis for Allowable Emissions Code:	2. Future Effective Date of Allowable Emissions:
3. Allowable Emissions and Units:	4. Equivalent Allowable Emissions: lb/hour tons/year
5. Method of Compliance:	
6. Allowable Emissions Comment (Description of Operating Method):	

Allowable Emissions Allowable Emissions _____ of _____

1. Basis for Allowable Emissions Code:	2. Future Effective Date of Allowable Emissions:
3. Allowable Emissions and Units:	4. Equivalent Allowable Emissions: lb/hour tons/year
5. Method of Compliance:	
6. Allowable Emissions Comment (Description of Operating Method):	

F1. EMISSIONS UNIT POLLUTANT DETAIL INFORMATION – POTENTIAL, FUGITIVE, AND ACTUAL EMISSIONS

(Optional for unregulated emissions units.)

Complete a Subsection F1 for each pollutant identified in Subsection E if applying for an air construction permit or concurrent processing of an air construction permit and a revised or renewal Title V operation permit. Complete for each emissions-limited pollutant identified in Subsection E if applying for an air operation permit.

Potential, Estimated Fugitive, and Baseline & Projected Actual Emissions

1. Pollutant Emitted: **Greenhouse Gases - GHG**	2. Total Percent Efficiency of Control:
3. Potential Emissions: **18,270** lb/hour **80,020** tons/year	4. Synthetically Limited? ☐ Yes ☒ No
5. Range of Estimated Fugitive Emissions (as applicable): to tons/year	
6. Emission Factor: **1,110 lb CO_2e/MW-hr** Reference: **Design basis**	7. Emissions Method Code: **2**
8.a. Baseline Actual Emissions (if required): **126,679.5** tons/year	8.b. Baseline 24-month Period: From: **2015** To: **2016**
9.a. Projected Actual Emissions (if required): tons/year	9.b. Projected Monitoring Period: ☐ 5 years ☐ 10 years
10. Calculation of Emissions: **See PSD Report, Tables 2-3 and A-4**	
11. Potential, Fugitive, and Actual Emissions Comment: **Potential emissions for each engine.**	

F2. EMISSIONS UNIT POLLUTANT DETAIL INFORMATION - ALLOWABLE EMISSIONS

Complete Subsection F2 if the pollutant identified in Subsection F1 is or would be subject to a numerical emissions limitation.

Allowable Emissions Allowable Emissions ___1___ of ___1___

1. Basis for Allowable Emissions Code: **Other**	2. Future Effective Date of Allowable Emissions:
3. Allowable Emissions and Units: **1,110 lb CO e/MW-hr (gross)**	4. Equivalent Allowable Emissions: **18,270** lb/hour **80,020** tons/year
5. Method of Compliance: **12-month rolling average using EPA 40 CFR Part 98 emission factors**	
6. Allowable Emissions Comment (Description of Operating Method): **Proposed BACT limit**	

Allowable Emissions Allowable Emissions _____ of _____

1. Basis for Allowable Emissions Code:	2. Future Effective Date of Allowable Emissions:
3. Allowable Emissions and Units:	4. Equivalent Allowable Emissions: lb/hour tons/year
5. Method of Compliance:	
6. Allowable Emissions Comment (Description of Operating Method):	

Allowable Emissions Allowable Emissions _____ of _____

1. Basis for Allowable Emissions Code:	2. Future Effective Date of Allowable Emissions:
3. Allowable Emissions and Units:	4. Equivalent Allowable Emissions: lb/hour tons/year
5. Method of Compliance:	
6. Allowable Emissions Comment (Description of Operating Method):	

F1. EMISSIONS UNIT POLLUTANT DETAIL INFORMATION – POTENTIAL, FUGITIVE, AND ACTUAL EMISSIONS

(Optional for unregulated emissions units.)

Complete a Subsection F1 for each pollutant identified in Subsection E if applying for an air construction permit or concurrent processing of an air construction permit and a revised or renewal Title V operation permit. Complete for each emissions-limited pollutant identified in Subsection E if applying for an air operation permit.

Potential, Estimated Fugitive, and Baseline & Projected Actual Emissions

1. Pollutant Emitted: **Formaldehyde- H095**	2. Total Percent Efficiency of Control:
3. Potential Emissions: **5.0** lb/hour **21.9** tons/year	4. Synthetically Limited? ☐ Yes ☒ No
5. Range of Estimated Fugitive Emissions (as applicable): to tons/year	
6. Emission Factor: **14 ppmvd @15% O_2** Reference: **NESHAPS Subpart ZZZZ**	7. Emissions Method Code: **2**
8.a. Baseline Actual Emissions (if required): tons/year	8.b. Baseline 24-month Period: From: To:
9.a. Projected Actual Emissions (if required): tons/year	9.b. Projected Monitoring Period: ☐ 5 years ☐ 10 years
10. Calculation of Emissions: **See PSD Report**	
11. Potential, Fugitive, and Actual Emissions Comment: **Potential emission for each engine.**	

F2. EMISSIONS UNIT POLLUTANT DETAIL INFORMATION - ALLOWABLE EMISSIONS

Complete Subsection F2 if the pollutant identified in Subsection F1 is or would be subject to a numerical emissions limitation.

Allowable Emissions Allowable Emissions **1** of **1**

1. Basis for Allowable Emissions Code: **RULE**	2. Future Effective Date of Allowable Emissions:
3. Allowable Emissions and Units: **14 ppmvd @ 15% O_2**	4. Equivalent Allowable Emissions: **5.0** lb/hour **21.9** tons/year
5. Method of Compliance: **Reduction of CO emissions; Table 3 to Subpart ZZZZ**	
6. Allowable Emissions Comment (Description of Operating Method): **NSPS Subpart ZZZZ emission limit.**	

Allowable Emissions Allowable Emissions _____ of _____

1. Basis for Allowable Emissions Code:	2. Future Effective Date of Allowable Emissions:
3. Allowable Emissions and Units:	4. Equivalent Allowable Emissions: lb/hour tons/year
5. Method of Compliance:	
6. Allowable Emissions Comment (Description of Operating Method):	

Allowable Emissions Allowable Emissions _____ of _____

1. Basis for Allowable Emissions Code:	2. Future Effective Date of Allowable Emissions:
3. Allowable Emissions and Units:	4. Equivalent Allowable Emissions: lb/hour tons/year
5. Method of Compliance:	
6. Allowable Emissions Comment (Description of Operating Method):	

G. VISIBLE EMISSIONS INFORMATION

Complete Subsection G if this emissions unit is or would be subject to a unit-specific visible emissions limitation.

Visible Emissions Limitation: Visible Emissions Limitation **1** of **2**

1. Visible Emissions Subtype: **VE20**	2. Basis for Allowable Opacity: ☒ Rule ☐ Other
3. Allowable Opacity: Normal Conditions: **20** % Exceptional Conditions: **100** % Maximum Period of Excess Opacity Allowed: min/hour	
4. Method of Compliance: **EPA Method 9**	
5. Visible Emissions Comment: **FDEP Rule 62-296.320(4)(b)1, F.A.C., requires 20 percent opacity. Excess emissions allowed for 2 hours in any 24-hr period (Rule 62-210.700(1)).**	

Visible Emissions Limitation: Visible Emissions Limitation **2** of **2**

1. Visible Emissions Subtype: **VE10**	2. Basis for Allowable Opacity: ☐ Rule ☒ Other
3. Allowable Opacity: Normal Conditions: **10** % Exceptional Conditions: **20** % Maximum Period of Excess Opacity Allowed: **6** min/hour	
4. Method of Compliance: **EPA Method 9**	
5. Visible Emissions Comment:	

H. CONTINUOUS MONITOR INFORMATION

Complete Subsection H if this emissions unit is or would be subject to continuous monitoring.

Continuous Monitoring System: Continuous Monitor _____ of _____

1. Parameter Code:	2. Pollutant(s):
3. CMS Requirement:	☐ Rule ☐ Other
4. Monitor Information... Manufacturer: Model Number:	Serial Number:
5. Installation Date:	6. Performance Specification Test Date:
7. Continuous Monitor Comment:	

Continuous Monitoring System: Continuous Monitor _____ of _____

1. Parameter Code:	2. Pollutant(s):
3. CMS Requirement:	☐ Rule ☐ Other
4. Monitor Information... Manufacturer: Model Number:	Serial Number:
5. Installation Date:	6. Performance Specification Test Date:
7. Continuous Monitor Comment:	

I. EMISSIONS UNIT ADDITIONAL INFORMATION

Additional Requirements for All Applications, Except as Otherwise Stated

1. Process Flow Diagram: (Required for all permit applications, except Title V air operation permit revision applications if this information was submitted to the department within the previous five years and would not be altered as a result of the revision being sought)
   ☒ Attached, Document ID: **See PSD Report** ☐ Previously Submitted, Date _____

2. Fuel Analysis or Specification: (Required for all permit applications, except Title V air operation permit revision applications if this information was submitted to the department within the previous five years and would not be altered as a result of the revision being sought)
   ☒ Attached, Document ID: **See PSD Report** ☐ Previously Submitted, Date _____

3. Detailed Description of Control Equipment: (Required for all permit applications, except Title V air operation permit revision applications if this information was submitted to the department within the previous five years and would not be altered as a result of the revision being sought)
   ☒ Attached, Document ID: **See PSD Report** ☐ Previously Submitted, Date _____

4. Procedures for Startup and Shutdown: (Required for all operation permit applications, except Title V air operation permit revision applications if this information was submitted to the department within the previous five years and would not be altered as a result of the revision being sought)
   ☐ Attached, Document ID: _____ ☐ Previously Submitted, Date _____
   ☒ Not Applicable (construction application)

5. Operation and Maintenance Plan: (Required for all permit applications, except Title V air operation permit revision applications if this information was submitted to the department within the previous five years and would not be altered as a result of the revision being sought)
   ☐ Attached, Document ID: _____ ☐ Previously Submitted, Date _____
   ☒ Not Applicable

6. Compliance Demonstration Reports/Records:
   ☐ Attached, Document ID: _____
   Test Date(s)/Pollutant(s) Tested: _____
   ☐ Previously Submitted, Date: _____
   Test Date(s)/Pollutant(s) Tested: _____
   ☐ To be Submitted, Date (if known): _____
   Test Date(s)/Pollutant(s) Tested: _____
   ☒ Not Applicable
   Note: For FESOP applications, all required compliance demonstration records/reports must be submitted at the time of application. For Title V air operation permit applications, all required compliance demonstration reports/records must be submitted at the time of application, or a compliance plan must be submitted at the time of application.

7. Other Information Required by Rule or Statute:
   ☒ Attached, Document ID: **See PSD Report** ☐ Not Applicable

I. EMISSIONS UNIT ADDITIONAL INFORMATION (CONTINUED)

Additional Requirements for Air Construction Permit Applications

1.	Control Technology Review and Analysis (Rules 62-212.400(10) and 62-212.500(7), F.A.C.; 40 CFR 63.43(d) and (e)): ☒ Attached, Document ID: **See PSD Reports** ☐ Not Applicable
2.	Good Engineering Practice Stack Height Analysis (Rules 62-212.400(4)(d) and 62-212.500(4)(f), F.A.C.): ☒ Attached, Document ID: **See PSD Reports** ☐ Not Applicable
3.	Description of Stack Sampling Facilities: (Required for proposed new stack sampling facilities only) ☐ Attached, Document ID: _____ ☐ Not Applicable

Additional Requirements for Title V Air Operation Permit Applications

1.	Identification of Applicable Requirements: ☐ Attached, Document ID: _____
2.	Compliance Assurance Monitoring: ☐ Attached, Document ID: _____ ☒ Not Applicable
3.	Alternative Methods of Operation: ☐ Attached, Document ID: _____ ☐ Not Applicable
4.	Alternative Modes of Operation (Emissions Trading): ☐ Attached, Document ID: _____ ☒ Not Applicable

Additional Requirements Comment

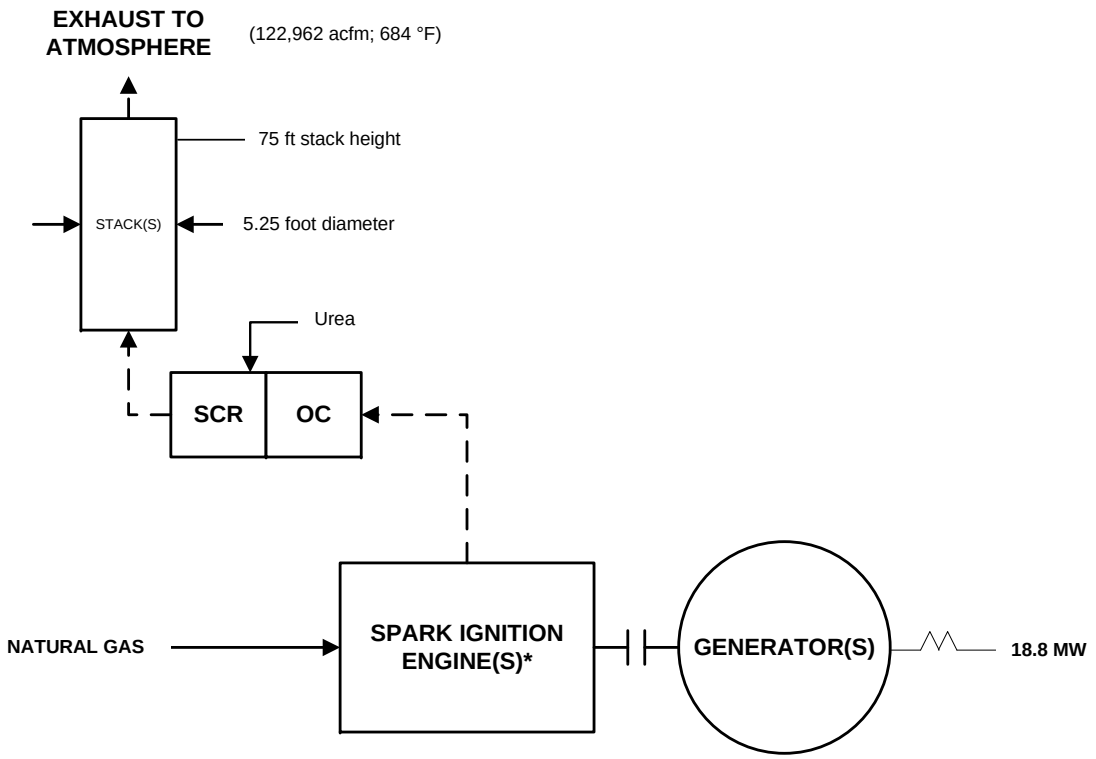

*Four engines that are four-stroke lean-burn gas fired reciprocating engines.

Process Flow Diagram
Wartsila 18V5SG Gas Engines Model
City of Tallahassee, RICE Project
Golder, 2017

Process Flow Legend
Solid/Liquid
Gas
Steam

Golder Associates

APPENDIX B

STORMWATER

HOPKINS ELECTRIC PLANT RICE PROJECT

MBC Job No. R83.001/2016-304

Downstream Conveyance Stormwater Analysis

Date: March 28, 2017

Roger V. Wynn, P.E., #49400

Moore Bass CONSULTING

805 North Gadsden Street - Tallahassee, Florida 32303 - (850) 222-5678

Certificate of Authorization No. 00006108

Table of Contents

1. Narrative and Discussion

2. Curve Number & Time of Concentration Calculations

    a. Curve Numbers for On-Site Basins
    b. Curve Numbers for Off-Site Basins

3. SWMF Stage Storage Table Comparison

4. ICPR Stormwater Model
    a. Nodal Maps
        - West-Basin (Present) and East-Basin (Pre-Development)
        - Downstream Analysis Pre-Development
        - Downstream Analysis Post-Development
    b. Input Data
        - West-Basin (Present) and East-Basin (Pre-Development)
        - Downstream Analysis Pre-Development
        - Downstream Analysis Post-Development

5. ICPR Model Results Summary

6. ICPR Model Results
        - West-Basin (Present) and East-Basin (Pre-Development)
        - Downstream Analysis Pre-Development
        - Downstream Analysis Post-Development

7. Project Maps and Details
    1.0) Survey of Project Area
    2.0) Existing Conditions On-Site Basin Map
    2.1) Post-Development On-Site Basin Map
    3.0) Overall Drainage Basin Map
    4.0) Required Modification to SWMF
    4.1) Required Modification to SWMF
    4.2) Required Modification to SWMF

1. Narrative and Discussion

Stormwater Narrative
for
Hopkins Electric Power Generating Plant
Reliability R.I.C.E. Project

MBC Job No. R83.001

March 28, 2017

GENERAL

The Hopkins Electric Power Generating Plant is located on the east side of Geddie Road approximately ½ mile north of Highway 20 in western Leon County.

The City of Tallahassee Electric Department proposes to construct a natural gas-fired Reciprocating Internal Combustion Engine (R.I.C.E) generator to enhance power generation and reliability during peak demand periods. This facility is to be constructed in the southeastern quadrant of the site.

The project area falls within the Lake Munson Drainage Basin and within the Gum Creek West Watershed.

PRESENT CONDITION

The project area is currently developed and for the purposes of stormwater modeling has been divided into an eastern and western basin. The eastern basin will not be redeveloped and will remain in its current condition. The western basin, however, will be redeveloped for the R.I.C.E. project. See Survey of Project Area, Sheet 1.0 and Existing Conditions Map, Sheet 2.0 (pages 110 and 111 in the drainage report).

A stormwater management facility was constructed approximately 12 years ago to provide capacity for development of the eastern basin. It is believed that prior to this, the eastern basin was in a natural, wooded condition. It further appears that design of the pond was based upon a restricted discharge design and that no downstream conveyance analysis was performed. Based upon this restricted discharge design, the existing pond is not adequate to accommodate the added flows from the redeveloped western basin. Therefore the decision was made to perform a downstream conveyance analysis and examine the pond based on a straight pre to post comparison between storms.

To do this a stormwater model was developed using ICPR (Interconnected Channel and Pond Routing) Version 3.10. For the predevelopment condition, the eastern basin was considered to be undeveloped in a natural, wooded state, while the western basin was modeled in its current condition. This provided a predevelopment discharge that established the allowable discharge for the stormwater pond in the post development condition. The existing pond was not modeled in the

predevelopment condition.

PROPOSED CONDITION

A proposed conditions model was also developed using ICPR. The improvements proposed for the R.I.C.E. project add approximately 1.087 acres of impervious area and approximately 0.635 acres of gravel (aggregate) area to the western basin. As previously stated the eastern basin remains in its existing condition, and was modeled in its existing condition. The existing stormwater management facility was also included in the proposed conditions model, but with proposed modifications.

The top of berm of the pond varies between elevation 130.5 and 131.8. The berm will be raised to a minimum elevation of 131.3. The existing outfall structure consists of a storm drain inlet with a baffle wall in the middle of the structure and a 4-inch orifice through the baffle wall. The baffle wall acts as an overflow weir inside of the inlet. Flow from the pond is conveyed to the outfall structure through a 12-inch PVC pipe. After passing through the 4-inch orifice or over the baffle wall, flow exits the outfall structure, also through a 12-inch PVC pipe. No change is proposed to the inlet or the orifice, but the baffle wall will be raised from a top elevation of 128.58 to elevation 129.00. A large spillway, lined with small boulders, is cut into the berm. This spillway will be raised from an approximate elevation of 128.0 to elevation 129.82. Finally, the pond is reduced in size slightly by encroachment from the improvements proposed in the western basin. This volume reduction is reflected in the proposed conditions stormwater model. See Pond Stage Storage Comparison Table on page 14 of the calculations. Also see sheets 4.0, 4.1, and 4.2 (pages 114-116 of the report) for details on the modifications to the pond.

OFFSITE DOWNSTREAM CONVEYANCE ANALYSIS

An offsite, downstream, conveyance analysis was also performed to examine downstream restrictions in the conveyance system or the potential for downstream flooding. As stormwater runoff leaves the site it flows generally to the south and east through a natural water course, eventually crossing Barineau Road through a 7.7 foot wide by 4 foot high box culvert. The boundary condition for this analysis was set at Barineau Road. The total drainage area to Barineau Road is approximately 344 acres. This is divided into a North Basin of 124 acres, and a South Basin of 219 acres. The North Basin drains to a railroad with a 42-inch RCP culvert. This culvert discharges into a natural watercourse and then merges with the watercourse that leads to the Barineau Road box culvert. See Overall Drainage Basin Map, sheet 3.0 (page 113 of the report).

RESULTS

Onsite

The existing stormwater management facility with the modifications proposed provides attenuation for the 2-year through 25-year frequency storms, for the 1-hour through 24-hour durations. In addition, one foot of freeboard is provided between the 100-year highwater and the top of the pond berm. See ICPR Results Summary on page 83 of the report.

Offsite

No significant restrictions or flooding concerns were found in the downstream, conveyance analysis. The box culvert at Barineau Road was examined in the pre and post condition. Pre stages were for the most part are within a few tenths of the post stages. The 100-year highwater (8-hour duration) is 97.3, not rising to the crown of the culvert, and maintaining approximately 4.5 feet of freeboard below the low in Barineau Road.

CONCLUSION

The pond, with the proposed modifications, provides adequate attenuation to the meet the requirements of the Leon County Land Development Code and the Northwest Florida Water Management District. The downstream conveyance analysis demonstrates that the proposed project does not cause or exacerbate any flooding problems to the point of analysis at the Barineau Road box culvert.

2. Curve Number Calculations & Time of Concentration Calculations

MooreBass CONSULTING

Job Name: HOPKINS ELECTRIC PLANT
Job No.: R83.001
Compiled by: JMoore

Date: 4/5/2017
Rev:

CN Calculations

Pre-Development

SOIL TYPE: **NCRS Soil Map**

1 - ALBANY LOAMY SAND TYPE A /D	32.60%
5 - BLANTON - TYPE A SOIL GROUP	67.40%

E-Sub-Basin East (Pre-Development)

Total Area 2.14
Curve Number (modified)

*Cover Desc.	CN	Area	CN * Area
Woods (Poor)	45	2.140	96.30
		2.14	96.30

Curve Number (modified) = 45.0
Area = 2.14 acres
DCIA = 0.0%
Tc = 28.2 minutes

E-Sub-Basin West (Present Conditions)

Total Area 4.92
Curve Number (modified)

**Cover Desc.	CN	Area	CN * Area
Existing Imprev. (Bldgs, Conc. Misc.)	98	0.950	93.14
Green Developed Areas (Mix of Gravel & Grass)	81	2.843	230.26
Existing SWMF	100	1.127	112.69
		4.92	436.09

Curve Number (modified) = 88.6
Area = 4.92 acres
DCIA = 0.0%
Tc = 5.0 minutes

* Condition of Basin prior to construction of existing pond.
** Condition of Basin currently and at constuction of existing pond.

MooreBass CONSULTING

Job Name: HOPKINS ELECTRIC PLANT
Job No.: R83.001
Compiled by: JMoore

Date: 4/5/2017
Rev:

CN Calculations

Post-Development

SOIL TYPE: **NCRS Soil Map**

1 - ALBANY LOAMY SAND TYPE A /D	32.60%
5 - BLANTON - TYPE A SOIL GROUP	67.40%

E-Sub-Basin East (Post)

Total Area 2.14
Curve Number (modified)

Cover Desc.	CN	Area	CN * Area
Existing Imprev. (Bldgs, Conc. Misc.)	98	1.629	159.63
Green Developed Areas (Mix of Gravel & Grass)	81	0.511	41.40
		2.14	201.03

Curve Number (modified) = 93.9
Area = 2.14 acres
DCIA = 0.0%
Tc = 5.0 minutes

P-Sub-Basin West (Post)

Total Area 4.92
Curve Number (modified)

Cover Desc.	CN	Area	CN * Area
Total Post Development Impervious Area	98	2.037	199.63
Proposed Aggregate (Gravel)	93	0.635	59.07
Green Developed Areas (Mix of Gravel & Grass)	81	1.175	95.17
Existing SWMF (Reduced)	100	1.073	107.28
		4.92	461.15

Curve Number (modified) = 93.7
Area = 4.92 acres
DCIA = 0.0%
Tc = 5.0 minutes

MooreBass CONSULTING

Job Name: HOPKINS ELECTRIC PLANT
Job No.: R83.001
Compiled by: JM

Date: 3/27/2017
Rev:

CN Calculations

Downstream Analysis

SOIL TYPE:	NCRS Soil Map	Type Soil Group	
1	Albany loamy sand	A /D	31.60%
3	Alpin sand	A	20.30%
5	Blanton fine sand	A	35.20%
8	Chipley fine sand	A	4.00%
32	Ocilla fine sand	B/D	1.70%
37	Ortega sand	A	2.20%
38	Pamlico-Dorovan	B/D	4.30%

Sub-Basin: E-Bethel Church Rd

Total Area 31.48
Curve Number (modified)

Cover Desc.	CN	Area	CN * Area
Ex. Residential (Bldgs, Misc.) 50% Imperv.	69	1.63	112.47
Imperv. (Streets, Roads)	98	1.09	106.82
Pasture (Poor)	68	1.23	83.64
Woods (Good)	25	25.19	629.75
Existing SWMF	100	2.34	234.00
		31.48	1,166.68

Curve Number (modified) = 37.1
Area = 31.48 acres
DCIA = 0.0%
Tc = 10.0 minutes

Sub-Basin: D-3

Total Area 92.77
Curve Number (modified)

Cover Desc.	CN	Area	CN * Area
Ex. Residential (Bldgs, Misc.) 50% Imperv.	69	29.36	2,025.84
Imperv. (Streets, Roads)	98	1.54	150.92
Pasture (Poor)	68	13.66	928.88
Woods (Good)	25	46.42	1,160.39
Existing Pond Depressions	100	1.79	179.00
		92.77	4,445.03

Curve Number (modified) = 47.9
Area = 92.77 acres
DCIA = 0.0%
Tc = 32.0 minutes

MooreBass CONSULTING

Job Name: HOPKINS ELECTRIC PLANT
Job No.: R83.001
Compiled by: JM

Date: 3/27/2017
Rev:

CN Calculations

Downstream Analysis

Sub-Basin: Confluence

Total Area 23.28
Curve Number (modified)

Cover Desc.	CN	Area	CN * Area
Imperv. (Rail Road)	98	0.38	37.24
Pasture (Fair)	49	1.02	49.98
Woods (Fair)	36	4.35	156.60
Woods (Good)	25	17.53	438.29
		23.28	682.11

Curve Number (modified) = 29.3
Area = 23.28 acres
DCIA = 0.0%
Tc = 33 minutes

Sub-Basin: Transmission Rd

Total Area 67.11
Curve Number (modified)

Cover Desc.	CN	Area	CN * Area
Ex. (Bldgs, Misc.) 50% Imperv.	69	5.59	385.45
Imperv. (Streets, Roads)	98	0.12	11.76
Pasture (Fair)	49	3.68	180.32
Pasture (Poor)	68	5.71	388.28
Woods (Good)	25	52.01	1,300.26
		67.11	2,266.08

Curve Number (modified) = 33.8
Area = 67.11 acres
DCIA = 0.0%
Tc = 44 minutes

Sub-Basin: B-2

Total Area 83.66
Curve Number (modified)

Cover Desc.	CN	Area	CN * Area
Existing Open Areas (Industrial Areas)	93	5.63	523.59
Ex. Residential (Bldgs, Misc.) 50% Imperv.	69	1.31	90.39
Imperv. (Streets, Roads)	98	0.54	53.29
Bypass Ditch	39	0.89	34.71
Pasture (Fair)	49	5.36	262.64
Pasture (Poor)	68	0.56	38.08
Woods (Good)	25	69.37	1,734.17
		83.66	2,736.87

Curve Number (modified) = 32.7
Area = 83.66 acres
DCIA = 0.0%
Tc = 42 minutes

MooreBass CONSULTING

Job Name: HOPKINS ELECTRIC PLANT
Job No.: R83.001
Compiled by: JM

Date: 3/27/2017
Rev:

CN Calculations

Downstream Analysis

Sub-Basin: Barineau Rd

Total Area 38.94

Curve Number (modified)

Cover Desc.	CN	Area	CN * Area
Ex. Residential (Bldgs, Misc.) 50% Imperv.	69	0.00	0.00
Imperv. (Streets, Roads)	98	0.63	61.74
Pasture (Fair)	49	1.93	94.57
Woods (Fair)	36	5.76	207.36
Woods (Good)	25	30.62	765.59
		38.94	1,129.26

Curve Number (modified) = 29.0
Area = 38.94 acres
DCIA = 0.0%
Tc = 30 minutes

3. SWMF Stage Storage Table Comparison

MooreBass CONSULTING

Project Name:	HOPKINS ELECTRIC PLANT	Prepared By:	JM	Date:	3/27/2017
		Revised By:		Rev.:	
Project No.:	R83.001	Checked By:		Date:	

Calculations

Input Parameters

EXISTING SWMF STAGE STORAGE TABLE

SWMF 1

Stage (feet)	Area (sf)	Area (ac)	Inc. Vol. (cf)	Sum Vol. (cf)	Sum Vol. (af)
125.5	**5,005**	0.115	0.0	0.0	0.00
126.0	**15,030**	0.345	5,008.7	5,008.7	0.11
127.0	**22,016**	0.505	18,522.9	23,531.7	0.54
128.0	**26,410**	0.606	24,212.9	47,744.6	1.10
129.0	**30,895**	0.709	28,652.5	76,397.1	1.75
130.0	**35,117**	0.806	33,006.0	109,403.1	2.51
131.0	**39,436**	0.905	37,276.5	146,679.6	3.37

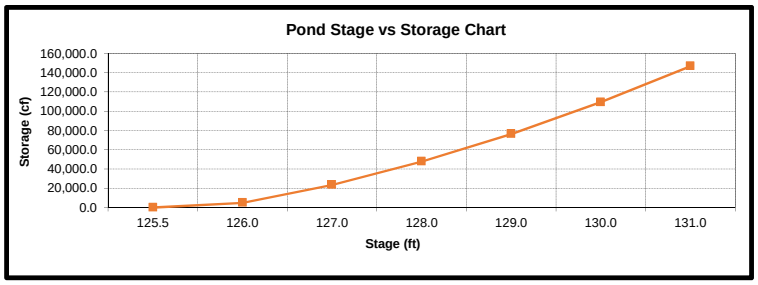

REDUCED SWMF STAGE STORAGE TABLE (WITH BERM RAISED TO 131.31)

SWMF 1

Stage (feet)	Area (sf)	Area (ac)	Inc. Vol. (cf)	Sum Vol. (cf)	Sum Vol. (af)
125.8	**5,005**	0.115	0.0	0.0	0.00
126.0	**17,655**	0.405	2,266.0	2,266.0	0.05
127.0	**22,912**	0.526	20,283.4	22,549.4	0.52
128.0	**26,710**	0.613	24,810.9	47,360.2	1.09
129.0	**30,463**	0.699	28,586.5	75,946.7	1.74
130.0	**34,319**	0.788	32,391.0	108,337.7	2.49
131.0	**38,294**	0.879	36,306.7	144,644.4	3.32
131.3	**39,243**	0.901	12,018.3	156,662.7	3.60

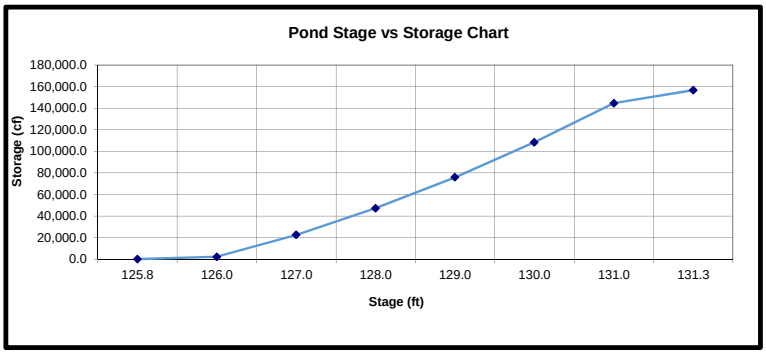

4. ICPR Stormwater Model

HOPKINS ELECTRIC PLANT
MBC Job # R83.001
Date: March. 27, 2017

Nodes
A Stage/Area
V Stage/Volume
T Time/Stage
M Manhole

Basins
O Overland Flow
U SCS Unit CN
S SBUH CN
Y SCS Unit GA
Z SBUH GA

Links
P Pipe
W Weir
C Channel
D Drop Structure
B Bridge
R Rating Curve
H Breach
E Percolation
F Filter
X Exfil Trench

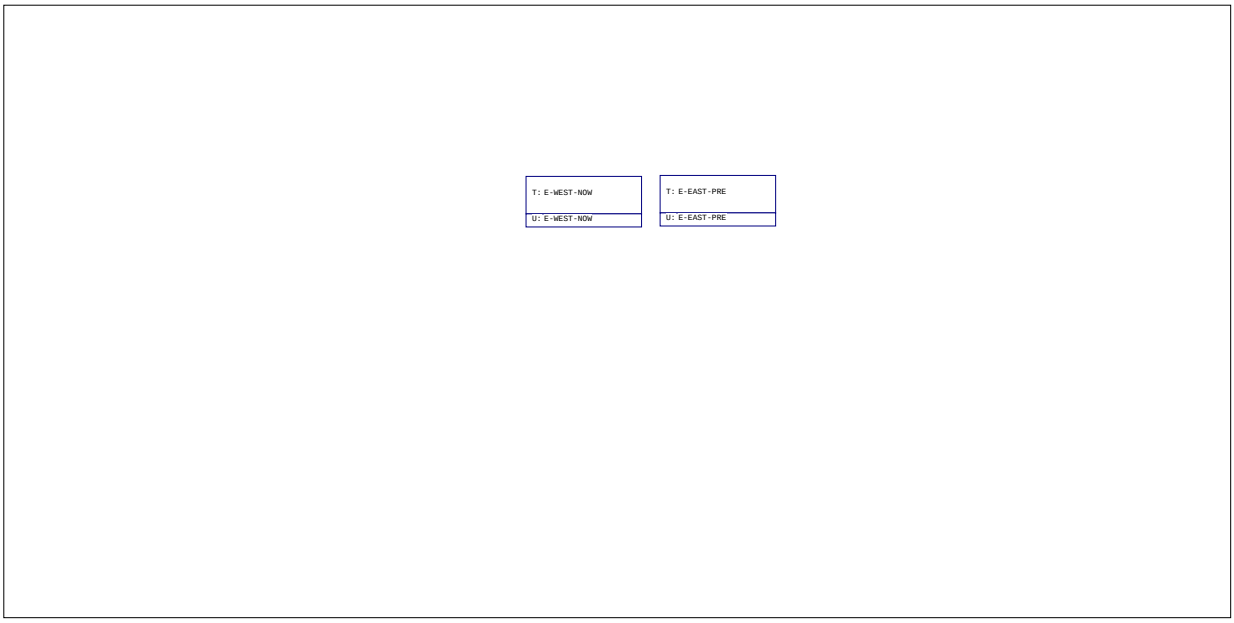

WEST PRESENT- EAST PRE-DEV

HOPKINS ELECTRIC PLANT-PRE
DOWNSTREAM ANALYSIS
MBC Job # R83.001
Date: Mar. 27, 2017

Nodes
A Stage/Area
V Stage/Volume
T Time/Stage
M Manhole

Basins
O Overland Flow
U SCS Unit CN
S SBUH CN
Y SCS Unit GA
Z SBUH GA

Links
P Pipe
W Weir
C Channel
D Drop Structure
B Bridge
R Rating Curve
H Breach
E Percolation
F Filter
X Exfil Trench

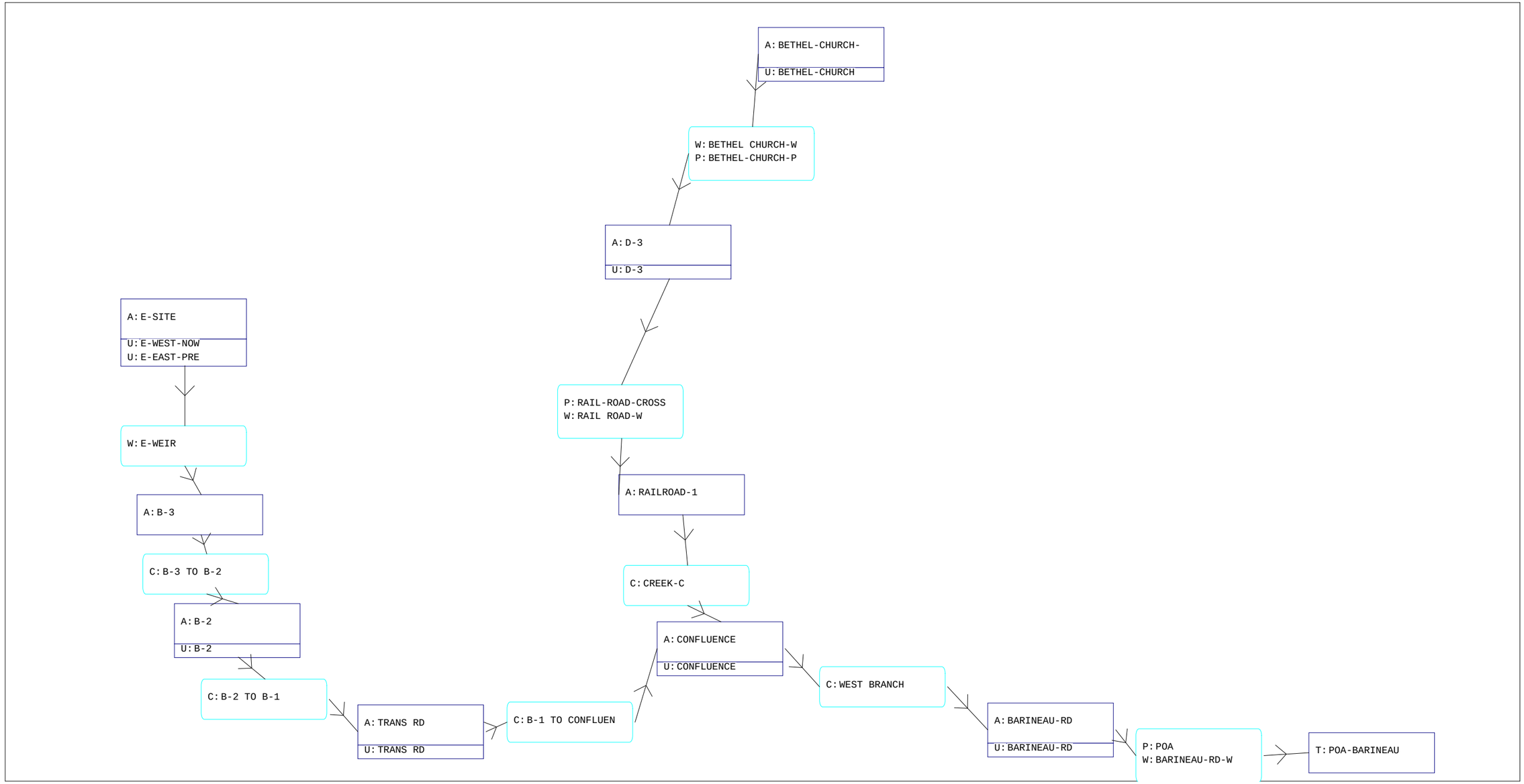

Interconnected Channel and Pond Routing Model (ICPR) ©2002 Streamline Technologies, Inc.

HOPKINS ELECTRIC PLANT-POST
MBC Job # R83.001
Date: Mar. 27, 2017

Nodes
A Stage/Area
V Stage/Volume
T Time/Stage
M Manhole

Basins
O Overland Flow
U SCS Unit CN
S SBUH CN
Y SCS Unit GA
Z SBUH GA

Links
P Pipe
W Weir
C Channel
D Drop Structure
B Bridge
R Rating Curve
H Breach
E Percolation
F Filter
X Exfil Trench

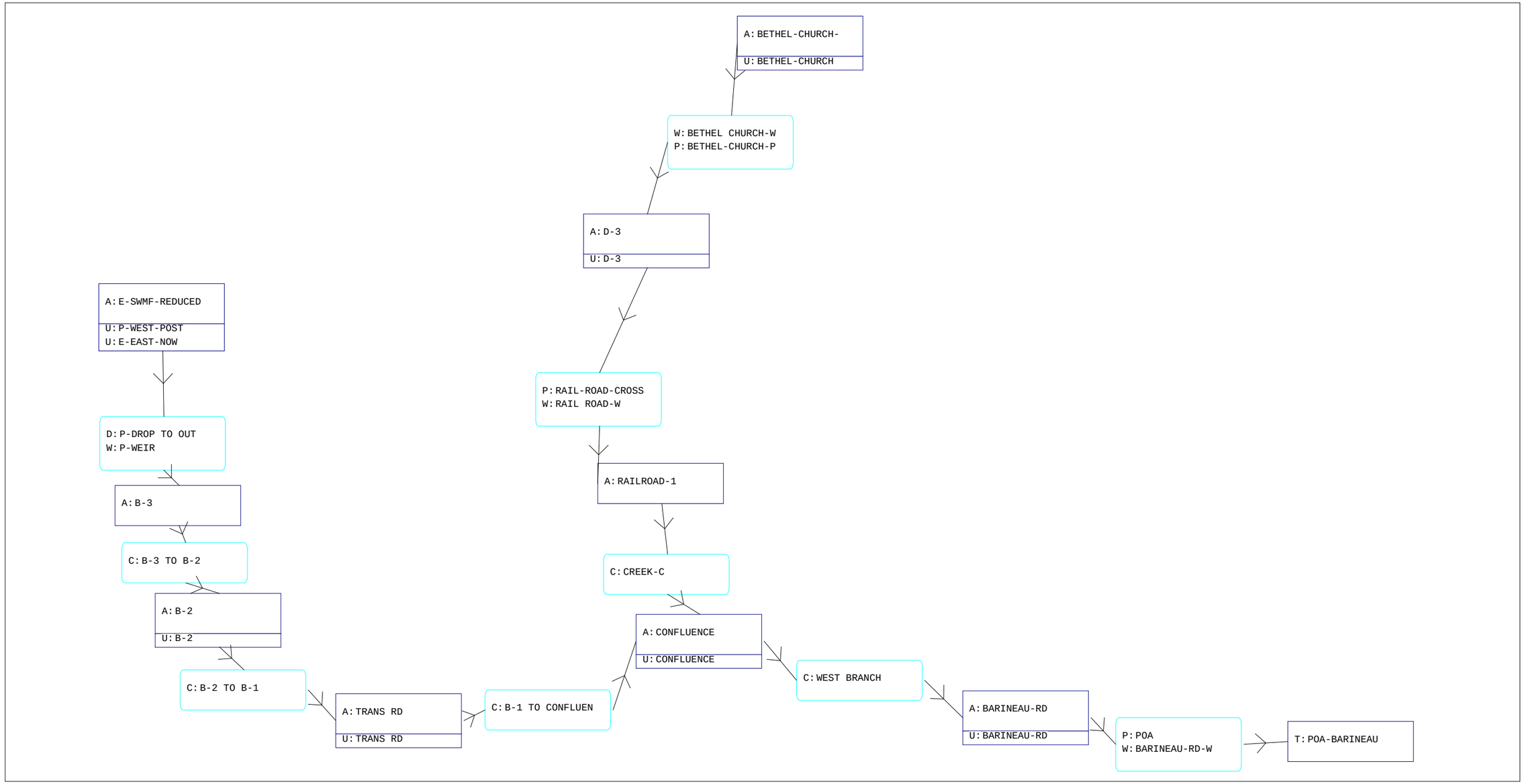

Interconnected Channel and Pond Routing Model (ICPR) ©2002 Streamline Technologies, Inc.

West-Basin (Present) and East-Basin (Pre-Development) Input

```
==========================================================================================
==== Basins ==============================================================================
==========================================================================================

         Name: E-EAST-PRE               Node: E-EAST-PRE             Status: Onsite
        Group: BASE                     Type: SCS Unit Hydrograph CN

        Unit Hydrograph: Uh323                    Peaking Factor: 323.0
          Rainfall File:                     Storm Duration(hrs): 0.00
    Rainfall Amount(in): 0.000                 Time of Conc(min): 28.20
             Area(ac): 2.140                     Time Shift(hrs): 0.00
          Curve Number: 45.00              Max Allowable Q(cfs): 999999.000
               DCIA(%): 0.00


-------------------------------------------------------------------------------------------
         Name: E-WEST-NOW               Node: E-WEST-NOW             Status: Onsite
        Group: BASE                     Type: SCS Unit Hydrograph CN

        Unit Hydrograph: Uh323                    Peaking Factor: 323.0
          Rainfall File:                     Storm Duration(hrs): 0.00
    Rainfall Amount(in): 0.000                 Time of Conc(min): 5.00
             Area(ac): 4.920                     Time Shift(hrs): 0.00
          Curve Number: 88.60              Max Allowable Q(cfs): 999999.000
               DCIA(%): 0.00


==========================================================================================
==== Nodes ===============================================================================
==========================================================================================

      Name: E-EAST-PRE          Base Flow(cfs): 0.000          Init Stage(ft): 134.000
     Group: BASE                                               Warn Stage(ft): 136.000
      Type: Time/Stage


      Time(hrs)       Stage(ft)
--------------- ---------------
           0.00         134.000
       99999.00         134.000

------------------------------------------------------------------------------------------
      Name: E-WEST-NOW          Base Flow(cfs): 0.000          Init Stage(ft): 134.000
     Group: BASE                                               Warn Stage(ft): 136.000
      Type: Time/Stage


      Time(hrs)       Stage(ft)
--------------- ---------------
           0.00         134.000
       99999.00         134.000

==========================================================================================
==== Cross Sections ======================================================================
==========================================================================================

              Name:                              Group: BASE
      Encroachment: No


    Station(ft)   Elevation(ft)     Manning's N
--------------- --------------- ---------------

==========================================================================================
==== Pipes ===============================================================================
==========================================================================================

         Name:                     From Node:                   Length(ft): 0.00
        Group: BASE                  To Node:                        Count: 1
                                                          Friction Equation: Automatic
               UPSTREAM       DOWNSTREAM                  Solution Algorithm: Most Restrictive
     Geometry: Circular       Circular                                 Flow: Both
     Span(in): 0.00           0.00                        Entrance Loss Coef: 0.00
     Rise(in): 0.00           0.00                            Exit Loss Coef: 1.00
   Invert(ft): 0.000          0.000                           Bend Loss Coef: 0.00
  Manning's N: 0.000000       0.000000                      Outlet Ctrl Spec: Use dc or tw
 Top Clip(in): 0.000          0.000                          Inlet Ctrl Spec: Use dc
```

```
 Bot Clip(in): 0.000          0.000                       Stabilizer Option: None


Upstream FHWA Inlet Edge Description:
Circular Concrete: Square edge w/ headwall

Downstream FHWA Inlet Edge Description:
Circular Concrete: Square edge w/ headwall


==========================================================================================
==== Weirs ===============================================================================
==========================================================================================

         Name:                     From Node:
        Group: BASE                  To Node:
         Flow: Both                    Count: 1
         Type: Horizontal           Geometry: Circular

                   Span(in): 0.00
                   Rise(in): 0.00
                  Invert(ft): 0.000
       Control Elevation(ft): 0.000
                                          TABLE
             Bottom Clip(in): 0.000
                Top Clip(in): 0.000
         Weir Discharge Coef: 3.200
      Orifice Discharge Coef: 0.600


==========================================================================================
==== Hydrology Simulations ===============================================================
==========================================================================================

         Name: 100yr-1hr
     Filename: C:\Projects\100yr-1hr.R32

      Override Defaults: Yes
    Storm Duration(hrs): 1.00
          Rainfall File: Fdot-1
    Rainfall Amount(in): 4.40

Time(hrs)       Print Inc(min)
--------------- ---------------
2.000           2.00

-------------------------------------------------------------------------------------------------
         Name: 100yr-24hr
     Filename: C:\Projects\100yr-24hr.R32

      Override Defaults: Yes
    Storm Duration(hrs): 24.00
          Rainfall File: Fdot-24
    Rainfall Amount(in): 10.90

Time(hrs)       Print Inc(min)
--------------- ---------------
24.000          2.00

-------------------------------------------------------------------------------------------------
         Name: 100yr-2hr
     Filename: C:\Projects\100yr-2hr.R32

      Override Defaults: Yes
    Storm Duration(hrs): 2.00
          Rainfall File: Fdot-2
    Rainfall Amount(in): 5.80

Time(hrs)       Print Inc(min)
--------------- ---------------
2.000           2.00

-------------------------------------------------------------------------------------------------
         Name: 100yr-4hr
     Filename: C:\Projects\100yr-4hr.R32

      Override Defaults: Yes
    Storm Duration(hrs): 4.00
          Rainfall File: Fdot-4
    Rainfall Amount(in): 7.20
```

```
Time(hrs)       Print Inc(min)
--------------- ---------------
4.000           2.00

-----------------------------------------------------------------------------------------------
         Name: 100yr-8hr
     Filename: C:\Projects\100yr-8hr.R32

      Override Defaults: Yes
    Storm Duration(hrs): 8.00
          Rainfall File: Fdot-8
    Rainfall Amount(in): 8.90

Time(hrs)       Print Inc(min)
--------------- ---------------
8.000           2.00

-----------------------------------------------------------------------------------------------
         Name: 10yr-1hr
     Filename: C:\Projects\10yr-1hr.R32

      Override Defaults: Yes
    Storm Duration(hrs): 1.00
          Rainfall File: Fdot-1
    Rainfall Amount(in): 3.20

Time(hrs)       Print Inc(min)
--------------- ---------------
2.000           2.00

-----------------------------------------------------------------------------------------------
         Name: 10yr-24hr
     Filename: C:\Projects\10yr-24hr.R32

      Override Defaults: Yes
    Storm Duration(hrs): 24.00
          Rainfall File: Fdot-24
    Rainfall Amount(in): 7.50

Time(hrs)       Print Inc(min)
--------------- ---------------
24.000          2.00

-----------------------------------------------------------------------------------------------
         Name: 10yr-2hr
     Filename: C:\Projects\10yr-2hr.R32

      Override Defaults: Yes
    Storm Duration(hrs): 2.00
          Rainfall File: Fdot-2
    Rainfall Amount(in): 4.10

Time(hrs)       Print Inc(min)
--------------- ---------------
2.000           2.00

-----------------------------------------------------------------------------------------------
         Name: 10yr-4hr
     Filename: C:\Projects\10yr-4hr.R32

      Override Defaults: Yes
    Storm Duration(hrs): 4.00
          Rainfall File: Fdot-4
    Rainfall Amount(in): 5.00

Time(hrs)       Print Inc(min)
--------------- ---------------
4.000           2.00

-----------------------------------------------------------------------------------------------
         Name: 10yr-8hr
     Filename: C:\Projects\10yr-8hr.R32

      Override Defaults: Yes
    Storm Duration(hrs): 8.00
          Rainfall File: Fdot-8
    Rainfall Amount(in): 6.20

Time(hrs)       Print Inc(min)
--------------- ---------------
8.000           2.00
```

```
--------------------------------------------------------------------------------------------------
         Name: 25YR-1HR
     Filename: C:\Projects\25YR-1HR.R32

      Override Defaults: Yes
    Storm Duration(hrs): 1.00
          Rainfall File: Fdot-1
    Rainfall Amount(in): 3.70

Time(hrs)       Print Inc(min)
--------------- ---------------
2.000           2.00

--------------------------------------------------------------------------------------------------
         Name: 25YR-24HR
     Filename: C:\Projects\25YR-24HR.R32

      Override Defaults: Yes
    Storm Duration(hrs): 24.00
          Rainfall File: Fdot-24
    Rainfall Amount(in): 8.50

Time(hrs)       Print Inc(min)
--------------- ---------------
24.000          2.00

--------------------------------------------------------------------------------------------------
         Name: 25YR-2HR
     Filename: C:\Projects\25YR-2HR.R32

      Override Defaults: Yes
    Storm Duration(hrs): 2.00
          Rainfall File: Fdot-2
    Rainfall Amount(in): 4.70

Time(hrs)       Print Inc(min)
--------------- ---------------
2.000           2.00

--------------------------------------------------------------------------------------------------
         Name: 25YR-4HR
     Filename: C:\Projects\25YR-4HR.R32

      Override Defaults: Yes
    Storm Duration(hrs): 4.00
          Rainfall File: Fdot-4
    Rainfall Amount(in): 5.90

Time(hrs)       Print Inc(min)
--------------- ---------------
4.000           2.00

--------------------------------------------------------------------------------------------------
         Name: 25YR-8HR
     Filename: C:\Projects\25YR-8HR.R32

      Override Defaults: Yes
    Storm Duration(hrs): 8.00
          Rainfall File: Fdot-8
    Rainfall Amount(in): 7.40

Time(hrs)       Print Inc(min)
--------------- ---------------
8.000           2.00

--------------------------------------------------------------------------------------------------
         Name: 2yr-1hr
     Filename: C:\Projects\2yr-1hr.R32

      Override Defaults: Yes
    Storm Duration(hrs): 1.00
          Rainfall File: Fdot-1
    Rainfall Amount(in): 2.30

Time(hrs)       Print Inc(min)
--------------- ---------------
2.000           2.00

--------------------------------------------------------------------------------------------------
         Name: 2yr-24hr
     Filename: C:\Projects\2yr-24hr.R32

      Override Defaults: Yes
```

```
    Storm Duration(hrs): 24.00
          Rainfall File: Fdot-24
    Rainfall Amount(in): 4.70

Time(hrs)       Print Inc(min)
--------------- ---------------
24.000          2.00

-----------------------------------------------------------------------------------------------
         Name: 2yr-2hr
     Filename: C:\Projects\2yr-2hr.R32

      Override Defaults: Yes
    Storm Duration(hrs): 2.00
          Rainfall File: Fdot-2
    Rainfall Amount(in): 3.00

Time(hrs)       Print Inc(min)
--------------- ---------------
2.000           2.00

-----------------------------------------------------------------------------------------------
         Name: 2yr-4hr
     Filename: C:\Projects\2yr-4hr.R32

      Override Defaults: Yes
    Storm Duration(hrs): 4.00
          Rainfall File: Fdot-4
    Rainfall Amount(in): 3.50

Time(hrs)       Print Inc(min)
--------------- ---------------
4.000           2.00

-----------------------------------------------------------------------------------------------
         Name: 2yr-8hr
     Filename: C:\Projects\2yr-8hr.R32

      Override Defaults: Yes
    Storm Duration(hrs): 8.00
          Rainfall File: Fdot-8
    Rainfall Amount(in): 4.20

Time(hrs)       Print Inc(min)
--------------- ---------------
8.000           2.00

-----------------------------------------------------------------------------------------------
         Name: 50yr-1hr
     Filename: C:\Projects\50yr-1hr.R32

      Override Defaults: Yes
    Storm Duration(hrs): 1.00
          Rainfall File: Fdot-1
    Rainfall Amount(in): 4.00

Time(hrs)       Print Inc(min)
--------------- ---------------
2.000           2.00

-----------------------------------------------------------------------------------------------
         Name: 50yr-24hr
     Filename: C:\Projects\50yr-24hr.R32

      Override Defaults: Yes
    Storm Duration(hrs): 24.00
          Rainfall File: Fdot-24
    Rainfall Amount(in): 9.60

Time(hrs)       Print Inc(min)
--------------- ---------------
24.000          2.00

-----------------------------------------------------------------------------------------------
         Name: 50yr-2hr
     Filename: C:\Projects\50yr-2hr.R32

      Override Defaults: Yes
    Storm Duration(hrs): 2.00
          Rainfall File: Fdot-2
    Rainfall Amount(in): 5.20

Time(hrs)       Print Inc(min)
```

```
--------------- ---------------
2.000           2.00

-----------------------------------------------------------------------------------------------
         Name: 50yr-4hr
     Filename: C:\Projects\50yr-4hr.R32

      Override Defaults: Yes
    Storm Duration(hrs): 4.00
          Rainfall File: Fdot-4
    Rainfall Amount(in): 6.40

Time(hrs)       Print Inc(min)
--------------- ---------------
4.000           2.00

-----------------------------------------------------------------------------------------------
         Name: 50yr-8hr
     Filename: C:\Projects\50yr-8hr.R32

      Override Defaults: Yes
    Storm Duration(hrs): 8.00
          Rainfall File: Fdot-8
    Rainfall Amount(in): 8.00

Time(hrs)       Print Inc(min)
--------------- ---------------
8.000           2.00

-----------------------------------------------------------------------------------------------
         Name: 5yr-1hr
     Filename: C:\Projects\5yr-1hr.R32

      Override Defaults: Yes
    Storm Duration(hrs): 1.00
          Rainfall File: Fdot-1
    Rainfall Amount(in): 2.80

Time(hrs)       Print Inc(min)
--------------- ---------------
2.000           2.00

-----------------------------------------------------------------------------------------------
         Name: 5yr-24hr
     Filename: C:\Projects\5yr-24hr.R32

      Override Defaults: Yes
    Storm Duration(hrs): 24.00
          Rainfall File: Fdot-24
    Rainfall Amount(in): 6.40

Time(hrs)       Print Inc(min)
--------------- ---------------
24.000          2.00

-----------------------------------------------------------------------------------------------
         Name: 5yr-2hr
     Filename: C:\Projects\5yr-2hr.R32

      Override Defaults: Yes
    Storm Duration(hrs): 2.00
          Rainfall File: Fdot-2
    Rainfall Amount(in): 3.60

Time(hrs)       Print Inc(min)
--------------- ---------------
2.000           2.00

-----------------------------------------------------------------------------------------------
         Name: 5yr-4hr
     Filename: C:\Projects\5yr-4hr.R32

      Override Defaults: Yes
    Storm Duration(hrs): 4.00
          Rainfall File: Fdot-4
    Rainfall Amount(in): 4.40

Time(hrs)       Print Inc(min)
--------------- ---------------
4.000           2.00

-----------------------------------------------------------------------------------------------
         Name: 5yr-8hr
```

```
     Filename: C:\Projects\5yr-8hr.R32

      Override Defaults: Yes
    Storm Duration(hrs): 8.00
          Rainfall File: Fdot-8
    Rainfall Amount(in): 5.50

Time(hrs)       Print Inc(min)
--------------- ---------------
8.000           2.00

==========================================================================================
==== Routing Simulations ================================================================
==========================================================================================

         Name: 100yr-1hr           Hydrology Sim: 100yr-1hr
     Filename: C:\Projects\100yr-1hr.I32

      Execute: Yes         Restart: No            Patch: No
  Alternative: No

        Max Delta Z(ft): 1.00                     Delta Z Factor: 0.00500
    Time Step Optimizer: 10.000
        Start Time(hrs): 0.000                     End Time(hrs): 2.00
     Min Calc Time(sec): 0.5000               Max Calc Time(sec): 60.0000
        Boundary Stages:                          Boundary Flows:


Time(hrs)       Print Inc(min)
--------------- ---------------
2.000           2.000

Group           Run
--------------- -----
BASE            Yes


------------------------------------------------------------------------------------------------
         Name: 100yr-24hr          Hydrology Sim: 100yr-24hr
     Filename: C:\Projects\100yr-24hr.I32

      Execute: Yes         Restart: No            Patch: No
  Alternative: No

        Max Delta Z(ft): 1.00                     Delta Z Factor: 0.00500
    Time Step Optimizer: 10.000
        Start Time(hrs): 0.000                     End Time(hrs): 24.00
     Min Calc Time(sec): 0.5000               Max Calc Time(sec): 60.0000
        Boundary Stages:                          Boundary Flows:


Time(hrs)       Print Inc(min)
--------------- ---------------
24.000          2.000

Group           Run
--------------- -----
BASE            Yes


------------------------------------------------------------------------------------------------
         Name: 100yr-2hr           Hydrology Sim: 100yr-2hr
     Filename: C:\Projects\100yr-2hr.I32

      Execute: Yes         Restart: No            Patch: No
  Alternative: No

        Max Delta Z(ft): 1.00                     Delta Z Factor: 0.00500
    Time Step Optimizer: 10.000
        Start Time(hrs): 0.000                     End Time(hrs): 2.00
     Min Calc Time(sec): 0.5000               Max Calc Time(sec): 60.0000
        Boundary Stages:                          Boundary Flows:


Time(hrs)       Print Inc(min)
--------------- ---------------
2.000           2.000

Group           Run
--------------- -----
```

```
BASE            Yes


-------------------------------------------------------------------------------------------------
         Name: 100yr-4hr           Hydrology Sim: 100yr-4hr
     Filename: C:\Projects\100yr-4hr.I32

      Execute: Yes         Restart: No            Patch: No
  Alternative: No

        Max Delta Z(ft): 1.00                     Delta Z Factor: 0.00500
    Time Step Optimizer: 10.000
        Start Time(hrs): 0.000                     End Time(hrs): 4.00
     Min Calc Time(sec): 0.5000               Max Calc Time(sec): 60.0000
        Boundary Stages:                          Boundary Flows:


Time(hrs)       Print Inc(min)
--------------- ---------------
4.000           2.000

Group           Run
--------------- -----
BASE            Yes


-------------------------------------------------------------------------------------------------
         Name: 100yr-8hr           Hydrology Sim: 100yr-8hr
     Filename: C:\Projects\100yr-8hr.I32

      Execute: Yes         Restart: No            Patch: No
  Alternative: No

        Max Delta Z(ft): 1.00                     Delta Z Factor: 0.00500
    Time Step Optimizer: 10.000
        Start Time(hrs): 0.000                     End Time(hrs): 8.00
     Min Calc Time(sec): 0.5000               Max Calc Time(sec): 60.0000
        Boundary Stages:                          Boundary Flows:


Time(hrs)       Print Inc(min)
--------------- ---------------
8.000           2.000

Group           Run
--------------- -----
BASE            Yes


-------------------------------------------------------------------------------------------------
         Name: 10yr-1hr            Hydrology Sim: 10YR-1HR
     Filename: C:\Projects\10yr-1hr.I32

      Execute: Yes         Restart: No            Patch: No
  Alternative: No

        Max Delta Z(ft): 1.00                     Delta Z Factor: 0.00500
    Time Step Optimizer: 10.000
        Start Time(hrs): 0.000                     End Time(hrs): 2.00
     Min Calc Time(sec): 0.5000               Max Calc Time(sec): 60.0000
        Boundary Stages:                          Boundary Flows:


Time(hrs)       Print Inc(min)
--------------- ---------------
2.000           2.000

Group           Run
--------------- -----
BASE            Yes


-------------------------------------------------------------------------------------------------
         Name: 10yr-24hr           Hydrology Sim: 10YR-24HR
     Filename: C:\Projects\10yr-24hr.I32

      Execute: Yes         Restart: No            Patch: No
  Alternative: No

        Max Delta Z(ft): 1.00                     Delta Z Factor: 0.00500
```

```
    Time Step Optimizer: 10.000
        Start Time(hrs): 0.000                    End Time(hrs): 24.00
     Min Calc Time(sec): 0.5000               Max Calc Time(sec): 60.0000
        Boundary Stages:                          Boundary Flows:


Time(hrs)       Print Inc(min)
--------------- ---------------
24.000          2.000

Group           Run
--------------- -----
BASE            Yes


-----------------------------------------------------------------------------------------------
         Name: 10yr-2hr            Hydrology Sim: 10YR-2HR
     Filename: C:\Projects\10yr-2hr.I32

      Execute: Yes         Restart: No            Patch: No
  Alternative: No

        Max Delta Z(ft): 1.00                     Delta Z Factor: 0.00500
    Time Step Optimizer: 10.000
        Start Time(hrs): 0.000                    End Time(hrs): 2.00
     Min Calc Time(sec): 0.5000               Max Calc Time(sec): 60.0000
        Boundary Stages:                          Boundary Flows:


Time(hrs)       Print Inc(min)
--------------- ---------------
2.000           2.000

Group           Run
--------------- -----
BASE            Yes


-----------------------------------------------------------------------------------------------
         Name: 10yr-4hr            Hydrology Sim: 10YR-4HR
     Filename: C:\Projects\10yr-4hr.I32

      Execute: Yes         Restart: No            Patch: No
  Alternative: No

        Max Delta Z(ft): 1.00                     Delta Z Factor: 0.00500
    Time Step Optimizer: 10.000
        Start Time(hrs): 0.000                    End Time(hrs): 4.00
     Min Calc Time(sec): 0.5000               Max Calc Time(sec): 60.0000
        Boundary Stages:                          Boundary Flows:


Time(hrs)       Print Inc(min)
--------------- ---------------
4.000           2.000

Group           Run
--------------- -----
BASE            Yes


-----------------------------------------------------------------------------------------------
         Name: 10yr-8hr            Hydrology Sim: 10YR-8HR
     Filename: C:\Projects\10yr-8hr.I32

      Execute: Yes         Restart: No            Patch: No
  Alternative: No

        Max Delta Z(ft): 1.00                     Delta Z Factor: 0.00500
    Time Step Optimizer: 10.000
        Start Time(hrs): 0.000                    End Time(hrs): 8.00
     Min Calc Time(sec): 0.5000               Max Calc Time(sec): 60.0000
        Boundary Stages:                          Boundary Flows:


Time(hrs)       Print Inc(min)
--------------- ---------------
8.000           2.000
```

```
Group           Run
--------------- -----
BASE            Yes


-----------------------------------------------------------------------------------------------
         Name: 25yr-1hr            Hydrology Sim: 25YR-1HR
     Filename: C:\Projects\25yr-1hr.I32

      Execute: Yes         Restart: No            Patch: No
  Alternative: No

        Max Delta Z(ft): 1.00                     Delta Z Factor: 0.00500
    Time Step Optimizer: 10.000
        Start Time(hrs): 0.000                     End Time(hrs): 2.00
     Min Calc Time(sec): 0.5000               Max Calc Time(sec): 60.0000
        Boundary Stages:                          Boundary Flows:



Time(hrs)       Print Inc(min)
--------------- ---------------
2.000           2.000

Group           Run
--------------- -----
BASE            Yes


-----------------------------------------------------------------------------------------------
         Name: 25yr-24hr           Hydrology Sim: 25YR-24HR
     Filename: C:\Projects\25yr-24hr.I32

      Execute: Yes         Restart: No            Patch: No
  Alternative: No

        Max Delta Z(ft): 1.00                     Delta Z Factor: 0.00500
    Time Step Optimizer: 10.000
        Start Time(hrs): 0.000                     End Time(hrs): 24.00
     Min Calc Time(sec): 0.5000               Max Calc Time(sec): 60.0000
        Boundary Stages:                          Boundary Flows:



Time(hrs)       Print Inc(min)
--------------- ---------------
24.000          2.000

Group           Run
--------------- -----
BASE            Yes


-----------------------------------------------------------------------------------------------
         Name: 25yr-2hr            Hydrology Sim: 25YR-2HR
     Filename: C:\Projects\25yr-2hr.I32

      Execute: Yes         Restart: No            Patch: No
  Alternative: No

        Max Delta Z(ft): 1.00                     Delta Z Factor: 0.00500
    Time Step Optimizer: 10.000
        Start Time(hrs): 0.000                     End Time(hrs): 2.00
     Min Calc Time(sec): 0.5000               Max Calc Time(sec): 60.0000
        Boundary Stages:                          Boundary Flows:



Time(hrs)       Print Inc(min)
--------------- ---------------
2.000           2.000

Group           Run
--------------- -----
BASE            Yes


-----------------------------------------------------------------------------------------------
         Name: 25yr-4hr            Hydrology Sim: 25YR-4HR
     Filename: C:\Projects\25yr-4hr.I32

      Execute: Yes         Restart: No            Patch: No
  Alternative: No
```

```
        Max Delta Z(ft): 1.00                    Delta Z Factor: 0.00500
    Time Step Optimizer: 10.000
        Start Time(hrs): 0.000                    End Time(hrs): 4.00
     Min Calc Time(sec): 0.5000               Max Calc Time(sec): 60.0000
        Boundary Stages:                         Boundary Flows:


Time(hrs)       Print Inc(min)
--------------- ---------------
4.000           2.000

Group           Run
--------------- -----
BASE            Yes


-----------------------------------------------------------------------------------------------
         Name: 25yr-8hr            Hydrology Sim: 25YR-8HR
     Filename: C:\Projects\25yr-8hr.I32

      Execute: Yes         Restart: No            Patch: No
  Alternative: No

        Max Delta Z(ft): 1.00                    Delta Z Factor: 0.00500
    Time Step Optimizer: 10.000
        Start Time(hrs): 0.000                    End Time(hrs): 8.00
     Min Calc Time(sec): 0.5000               Max Calc Time(sec): 60.0000
        Boundary Stages:                         Boundary Flows:


Time(hrs)       Print Inc(min)
--------------- ---------------
8.000           2.000

Group           Run
--------------- -----
BASE            Yes


-----------------------------------------------------------------------------------------------
         Name: 2yr-1hr             Hydrology Sim: 2YR-1HR
     Filename: C:\Projects\2yr-1hr.I32

      Execute: Yes         Restart: No            Patch: No
  Alternative: No

        Max Delta Z(ft): 1.00                    Delta Z Factor: 0.00500
    Time Step Optimizer: 10.000
        Start Time(hrs): 0.000                    End Time(hrs): 2.00
     Min Calc Time(sec): 0.5000               Max Calc Time(sec): 60.0000
        Boundary Stages:                         Boundary Flows:


Time(hrs)       Print Inc(min)
--------------- ---------------
2.000           2.000

Group           Run
--------------- -----
BASE            Yes


-----------------------------------------------------------------------------------------------
         Name: 2yr-24hr            Hydrology Sim: 2YR-24HR
     Filename: C:\Projects\2yr-24hr.I32

      Execute: Yes         Restart: No            Patch: No
  Alternative: No

        Max Delta Z(ft): 1.00                    Delta Z Factor: 0.00500
    Time Step Optimizer: 10.000
        Start Time(hrs): 0.000                    End Time(hrs): 24.00
     Min Calc Time(sec): 0.5000               Max Calc Time(sec): 60.0000
        Boundary Stages:                         Boundary Flows:


Time(hrs)       Print Inc(min)
--------------- ---------------
```

```
24.000          2.000

Group           Run
--------------- -----
BASE            Yes


-----------------------------------------------------------------------------------------------
         Name: 2yr-2hr             Hydrology Sim: 2YR-2HR
     Filename: C:\Projects\2yr-2hr.I32

      Execute: Yes         Restart: No            Patch: No
  Alternative: No

        Max Delta Z(ft): 1.00                     Delta Z Factor: 0.00500
    Time Step Optimizer: 10.000
        Start Time(hrs): 0.000                     End Time(hrs): 2.00
     Min Calc Time(sec): 0.5000               Max Calc Time(sec): 60.0000
        Boundary Stages:                          Boundary Flows:


Time(hrs)       Print Inc(min)
--------------- ---------------
2.000           2.000

Group           Run
--------------- -----
BASE            Yes


-----------------------------------------------------------------------------------------------
         Name: 2yr-4hr             Hydrology Sim: 2YR-4HR
     Filename: C:\Projects\2yr-4hr.I32

      Execute: Yes         Restart: No            Patch: No
  Alternative: No

        Max Delta Z(ft): 1.00                     Delta Z Factor: 0.00500
    Time Step Optimizer: 10.000
        Start Time(hrs): 0.000                     End Time(hrs): 4.00
     Min Calc Time(sec): 0.5000               Max Calc Time(sec): 60.0000
        Boundary Stages:                          Boundary Flows:


Time(hrs)       Print Inc(min)
--------------- ---------------
4.000           2.000

Group           Run
--------------- -----
BASE            Yes


-----------------------------------------------------------------------------------------------
         Name: 2yr-8hr             Hydrology Sim: 2YR-8HR
     Filename: C:\Projects\2yr-8hr.I32

      Execute: Yes         Restart: No            Patch: No
  Alternative: No

        Max Delta Z(ft): 1.00                     Delta Z Factor: 0.00500
    Time Step Optimizer: 10.000
        Start Time(hrs): 0.000                     End Time(hrs): 8.00
     Min Calc Time(sec): 0.5000               Max Calc Time(sec): 60.0000
        Boundary Stages:                          Boundary Flows:


Time(hrs)       Print Inc(min)
--------------- ---------------
8.000           2.000

Group           Run
--------------- -----
BASE            Yes


-----------------------------------------------------------------------------------------------
         Name: 50yr-1hr            Hydrology Sim: 50YR-1HR
     Filename: C:\Projects\50yr-1hr.I32
```

```
      Execute: Yes         Restart: No            Patch: No
  Alternative: No

        Max Delta Z(ft): 1.00                     Delta Z Factor: 0.00500
    Time Step Optimizer: 10.000
        Start Time(hrs): 0.000                     End Time(hrs): 2.00
     Min Calc Time(sec): 0.5000               Max Calc Time(sec): 60.0000
        Boundary Stages:                          Boundary Flows:


Time(hrs)       Print Inc(min)
--------------- ---------------
2.000           2.000

Group           Run
--------------- -----
BASE            Yes


-----------------------------------------------------------------------------------------------
         Name: 50yr-24hr           Hydrology Sim: 50YR-24HR
     Filename: C:\Projects\50yr-24hr.I32

      Execute: Yes         Restart: No            Patch: No
  Alternative: No

        Max Delta Z(ft): 1.00                     Delta Z Factor: 0.00500
    Time Step Optimizer: 10.000
        Start Time(hrs): 0.000                     End Time(hrs): 24.00
     Min Calc Time(sec): 0.5000               Max Calc Time(sec): 60.0000
        Boundary Stages:                          Boundary Flows:


Time(hrs)       Print Inc(min)
--------------- ---------------
24.000          2.000

Group           Run
--------------- -----
BASE            Yes


-----------------------------------------------------------------------------------------------
         Name: 50yr-2hr            Hydrology Sim: 50YR-2HR
     Filename: C:\Projects\50yr-2hr.I32

      Execute: Yes         Restart: No            Patch: No
  Alternative: No

        Max Delta Z(ft): 1.00                     Delta Z Factor: 0.00500
    Time Step Optimizer: 10.000
        Start Time(hrs): 0.000                     End Time(hrs): 2.00
     Min Calc Time(sec): 0.5000               Max Calc Time(sec): 60.0000
        Boundary Stages:                          Boundary Flows:


Time(hrs)       Print Inc(min)
--------------- ---------------
2.000           2.000

Group           Run
--------------- -----
BASE            Yes


-----------------------------------------------------------------------------------------------
         Name: 50yr-4hr            Hydrology Sim: 50YR-4HR
     Filename: C:\Projects\50yr-4hr.I32

      Execute: Yes         Restart: No            Patch: No
  Alternative: No

        Max Delta Z(ft): 1.00                     Delta Z Factor: 0.00500
    Time Step Optimizer: 10.000
        Start Time(hrs): 0.000                     End Time(hrs): 4.00
     Min Calc Time(sec): 0.5000               Max Calc Time(sec): 60.0000
        Boundary Stages:                          Boundary Flows:
```

```
Time(hrs)       Print Inc(min)
--------------- ---------------
4.000           2.000

Group           Run
--------------- -----
BASE            Yes


-----------------------------------------------------------------------------------------------
         Name: 50yr-8hr            Hydrology Sim: 50YR-8HR
     Filename: C:\Projects\50yr-8hr.I32

      Execute: Yes         Restart: No            Patch: No
  Alternative: No

        Max Delta Z(ft): 1.00                     Delta Z Factor: 0.00500
    Time Step Optimizer: 10.000
        Start Time(hrs): 0.000                     End Time(hrs): 8.00
     Min Calc Time(sec): 0.5000               Max Calc Time(sec): 60.0000
        Boundary Stages:                          Boundary Flows:



Time(hrs)       Print Inc(min)
--------------- ---------------
8.000           2.000

Group           Run
--------------- -----
BASE            Yes


-----------------------------------------------------------------------------------------------
         Name: 5yr-1hr             Hydrology Sim: 5YR-1HR
     Filename: C:\Projects\5yr-1hr.I32

      Execute: Yes         Restart: No            Patch: No
  Alternative: No

        Max Delta Z(ft): 1.00                     Delta Z Factor: 0.00500
    Time Step Optimizer: 10.000
        Start Time(hrs): 0.000                     End Time(hrs): 2.00
     Min Calc Time(sec): 0.5000               Max Calc Time(sec): 60.0000
        Boundary Stages:                          Boundary Flows:



Time(hrs)       Print Inc(min)
--------------- ---------------
2.000           2.000

Group           Run
--------------- -----
BASE            Yes


-----------------------------------------------------------------------------------------------
         Name: 5yr-24hr            Hydrology Sim: 5YR-24HR
     Filename: C:\Projects\5yr-24hr.I32

      Execute: Yes         Restart: No            Patch: No
  Alternative: No

        Max Delta Z(ft): 1.00                     Delta Z Factor: 0.00500
    Time Step Optimizer: 10.000
        Start Time(hrs): 0.000                     End Time(hrs): 24.00
     Min Calc Time(sec): 0.5000               Max Calc Time(sec): 60.0000
        Boundary Stages:                          Boundary Flows:



Time(hrs)       Print Inc(min)
--------------- ---------------
24.000          2.000

Group           Run
--------------- -----
BASE            Yes


-----------------------------------------------------------------------------------------------
         Name: 5yr-2hr             Hydrology Sim: 5YR-2HR
```

```
     Filename: C:\Projects\5yr-2hr.I32

      Execute: Yes         Restart: No            Patch: No
  Alternative: No

        Max Delta Z(ft): 1.00                     Delta Z Factor: 0.00500
    Time Step Optimizer: 10.000
        Start Time(hrs): 0.000                     End Time(hrs): 2.00
     Min Calc Time(sec): 0.5000               Max Calc Time(sec): 60.0000
        Boundary Stages:                          Boundary Flows:


Time(hrs)       Print Inc(min)
--------------- ---------------
2.000           2.000

Group           Run
--------------- -----
BASE            Yes


-------------------------------------------------------------------------------------------------
         Name: 5yr-4hr             Hydrology Sim: 5YR-4HR
     Filename: C:\Projects\5yr-4hr.I32

      Execute: Yes         Restart: No            Patch: No
  Alternative: No

        Max Delta Z(ft): 1.00                     Delta Z Factor: 0.00500
    Time Step Optimizer: 10.000
        Start Time(hrs): 0.000                     End Time(hrs): 4.00
     Min Calc Time(sec): 0.5000               Max Calc Time(sec): 60.0000
        Boundary Stages:                          Boundary Flows:


Time(hrs)       Print Inc(min)
--------------- ---------------
4.000           2.000

Group           Run
--------------- -----
BASE            Yes


-------------------------------------------------------------------------------------------------
         Name: 5yr-8hr             Hydrology Sim: 5YR-8HR
     Filename: C:\Projects\5yr-8hr.I32

      Execute: Yes         Restart: No            Patch: No
  Alternative: No

        Max Delta Z(ft): 1.00                     Delta Z Factor: 0.00500
    Time Step Optimizer: 10.000
        Start Time(hrs): 0.000                     End Time(hrs): 8.00
     Min Calc Time(sec): 0.5000               Max Calc Time(sec): 60.0000
        Boundary Stages:                          Boundary Flows:


Time(hrs)       Print Inc(min)
--------------- ---------------
8.000           2.000

Group           Run
--------------- -----
BASE            Yes


==========================================================================================
==== Boundary Conditions ================================================================
==========================================================================================

      Name:                       Node: E-South               Type: Stage

      Time(hrs)       Stage(ft)
--------------- ---------------
          0.000          85.000
        900.000          85.000
```

Downstream Analysis Pre-Development Input

```
==========================================================================================
==== Basins ==============================================================================
==========================================================================================

         Name: B-2                      Node: B-2                    Status: Onsite
        Group: DOWN-STREAM-ANA          Type: SCS Unit Hydrograph CN

        Unit Hydrograph: Uh323                    Peaking Factor: 323.0
          Rainfall File:                     Storm Duration(hrs): 0.00
    Rainfall Amount(in): 0.000                 Time of Conc(min): 42.00
               Area(ac): 83.660                  Time Shift(hrs): 0.00
           Curve Number: 32.70              Max Allowable Q(cfs): 999999.000
                DCIA(%): 0.00


------------------------------------------------------------------------------------------
         Name: BARINEAU-RD              Node: BARINEAU-RD            Status: Onsite
        Group: DOWN-STREAM-ANA          Type: SCS Unit Hydrograph CN

        Unit Hydrograph: Uh323                    Peaking Factor: 323.0
          Rainfall File:                     Storm Duration(hrs): 0.00
    Rainfall Amount(in): 0.000                 Time of Conc(min): 30.00
               Area(ac): 38.940                  Time Shift(hrs): 0.00
           Curve Number: 31.00              Max Allowable Q(cfs): 999999.000
                DCIA(%): 0.00


------------------------------------------------------------------------------------------
         Name: BETHEL-CHURCH            Node: BETHEL-CHURCH-         Status: Onsite
        Group: DOWN-STREAM-ANA          Type: SCS Unit Hydrograph CN

        Unit Hydrograph: Uh323                    Peaking Factor: 323.0
          Rainfall File:                     Storm Duration(hrs): 0.00
    Rainfall Amount(in): 0.000                 Time of Conc(min): 10.00
               Area(ac): 31.480                  Time Shift(hrs): 0.00
           Curve Number: 37.10              Max Allowable Q(cfs): 999999.000
                DCIA(%): 0.00


------------------------------------------------------------------------------------------
         Name: CONFLUENCE               Node: CONFLUENCE             Status: Onsite
        Group: DOWN-STREAM-ANA          Type: SCS Unit Hydrograph CN

        Unit Hydrograph: Uh323                    Peaking Factor: 323.0
          Rainfall File:                     Storm Duration(hrs): 0.00
    Rainfall Amount(in): 0.000                 Time of Conc(min): 33.00
               Area(ac): 23.280                  Time Shift(hrs): 0.00
           Curve Number: 31.00              Max Allowable Q(cfs): 999999.000
                DCIA(%): 0.00


------------------------------------------------------------------------------------------
         Name: D-3                      Node: D-3                    Status: Onsite
        Group: DOWN-STREAM-ANA          Type: SCS Unit Hydrograph CN

        Unit Hydrograph: Uh323                    Peaking Factor: 323.0
          Rainfall File:                     Storm Duration(hrs): 0.00
    Rainfall Amount(in): 0.000                 Time of Conc(min): 32.00
               Area(ac): 92.770                  Time Shift(hrs): 0.00
           Curve Number: 47.90              Max Allowable Q(cfs): 999999.000
                DCIA(%): 0.00


------------------------------------------------------------------------------------------
         Name: E-EAST-PRE               Node: E-SITE                 Status: Onsite
        Group: DOWN-STREAM-ANA          Type: SCS Unit Hydrograph CN

        Unit Hydrograph: Uh323                    Peaking Factor: 323.0
          Rainfall File:                     Storm Duration(hrs): 0.00
    Rainfall Amount(in): 0.000                 Time of Conc(min): 28.20
               Area(ac): 2.140                   Time Shift(hrs): 0.00
           Curve Number: 45.00              Max Allowable Q(cfs): 999999.000
                DCIA(%): 0.00

East Basin in Pre-development conditions;
Use CN and Tc values from Record Storm Report
```

```
-----------------------------------------------------------------------------------------------
         Name: E-WEST-NOW              Node: E-SITE                  Status: Onsite
        Group: DOWN-STREAM-ANA         Type: SCS Unit Hydrograph CN

        Unit Hydrograph: Uh323                   Peaking Factor: 323.0
          Rainfall File:                    Storm Duration(hrs): 0.00
    Rainfall Amount(in): 0.000                Time of Conc(min): 5.00
               Area(ac): 4.920                  Time Shift(hrs): 0.00
          Curve Number: 88.60              Max Allowable Q(cfs): 999999.000
               DCIA(%): 0.00

West Basin in present conditions

-----------------------------------------------------------------------------------------------
         Name: TRANS RD                Node: TRANS RD                Status: Onsite
        Group: DOWN-STREAM-ANA         Type: SCS Unit Hydrograph CN

        Unit Hydrograph: Uh323                   Peaking Factor: 323.0
          Rainfall File:                    Storm Duration(hrs): 0.00
    Rainfall Amount(in): 0.000                Time of Conc(min): 44.00
               Area(ac): 67.110                 Time Shift(hrs): 0.00
          Curve Number: 33.80              Max Allowable Q(cfs): 999999.000
               DCIA(%): 0.00


==============================================================================================
==== Nodes ===================================================================================
==============================================================================================

      Name: B-2                 Base Flow(cfs): 0.000          Init Stage(ft): 120.000
     Group: DOWN-STREAM-ANA                                    Warn Stage(ft): 123.000
      Type: Stage/Area

Assumed node to have some storage, from depression near converge of contours
Estimate storage amount

      Stage(ft)        Area(ac)
--------------- ---------------
        120.000          0.2000
        122.000          1.0000

-----------------------------------------------------------------------------------------------
      Name: B-3                 Base Flow(cfs): 0.000          Init Stage(ft): 124.000
     Group: DOWN-STREAM-ANA                                    Warn Stage(ft): 126.000
      Type: Stage/Area



      Stage(ft)        Area(ac)
--------------- ---------------
        124.000          0.0001
        129.800          0.0002

-----------------------------------------------------------------------------------------------
      Name: BARINEAU-RD         Base Flow(cfs): 0.000          Init Stage(ft): 93.640
     Group: DOWN-STREAM-ANA                                    Warn Stage(ft): 102.000
      Type: Stage/Area

Assumed Barineau Rd node to have some minor storage, from depression
Estimate small storage amount
FEMA Base Flood Elevation (BFE) = 102

      Stage(ft)        Area(ac)
--------------- ---------------
         93.640          0.0100
         94.000          0.0150
         95.000          0.2500
         96.000          0.5000

-----------------------------------------------------------------------------------------------
      Name: BETHEL-CHURCH-      Base Flow(cfs): 0.000          Init Stage(ft): 142.000
     Group: DOWN-STREAM-ANA                                    Warn Stage(ft): 155.000
      Type: Stage/Area

EXISTING POND AT BETHEL CHURCH RD

      Stage(ft)        Area(ac)
--------------- ---------------
        142.000          3.2170
        144.000          3.6500
        146.000          4.2230
        148.000          4.9510
```

```
        150.000          5.7120
        152.000          6.4080
        154.000          7.3200

-------------------------------------------------------------------------------------------
      Name: CONFLUENCE          Base Flow(cfs): 0.000          Init Stage(ft): 104.000
     Group: DOWN-STREAM-ANA                                    Warn Stage(ft): 107.500
      Type: Stage/Area

Assumed Confluence to have some minor storage
Estimate small storage amount

      Stage(ft)        Area(ac)
--------------- ---------------
        104.000          0.0010
        105.000          0.0020
        106.000          0.0030
        107.000          0.0050
        108.000          0.2000
        110.000          0.6000

-------------------------------------------------------------------------------------------
      Name: D-3                 Base Flow(cfs): 0.000          Init Stage(ft): 115.000
     Group: DOWN-STREAM-ANA                                    Warn Stage(ft): 126.000
      Type: Stage/Area

Floodplain Depressions Combined together

      Stage(ft)        Area(ac)
--------------- ---------------
        115.000          0.5050
        117.000          1.3070
        119.000          3.1890

-------------------------------------------------------------------------------------------
      Name: E-SITE              Base Flow(cfs): 0.000          Init Stage(ft): 125.500
     Group: DOWN-STREAM-ANA                                    Warn Stage(ft): 131.000
      Type: Stage/Area

Existing Site from both basins

      Stage(ft)        Area(ac)
--------------- ---------------
        125.500          0.0001
        129.800          0.0002

-------------------------------------------------------------------------------------------
      Name: POA-BARINEAU        Base Flow(cfs): 0.000          Init Stage(ft): 92.000
     Group: DOWN-STREAM-ANA                                    Warn Stage(ft): 95.000
      Type: Time/Stage


      Time(hrs)       Stage(ft)
--------------- ---------------
           0.00          92.000
       99999.00          92.000

-------------------------------------------------------------------------------------------
      Name: RAILROAD-1          Base Flow(cfs): 0.000          Init Stage(ft): 115.000
     Group: DOWN-STREAM-ANA                                    Warn Stage(ft): 125.000
      Type: Stage/Area


      Stage(ft)        Area(ac)
--------------- ---------------
        115.000          0.0000
        129.800          0.0001

-------------------------------------------------------------------------------------------
      Name: TRANS RD            Base Flow(cfs): 0.000          Init Stage(ft): 110.000
     Group: DOWN-STREAM-ANA                                    Warn Stage(ft): 112.000
      Type: Stage/Area

Assumed node to have some storage, from depression near dirt road crossing
Estimate storage amount

      Stage(ft)        Area(ac)
--------------- ---------------
        110.000          0.0900
        112.000          0.3300
```

==========
==== Cross Sections ==========
==========

Name: A-1 Group: DOWN-STREAM-ANA
Encroachment: No

Winding channel paths and ineffective slopes

Station(ft)	Elevation(ft)	Manning's N
-91.190	102.000	0.045000
-68.370	100.000	0.045000
-37.150	98.000	0.045000
-8.670	96.000	0.045000
0.000	94.000	0.045000
5.400	96.000	0.045000
41.370	98.000	0.045000
71.720	100.000	0.045000

Name: A-2 Group: DOWN-STREAM-ANA
Encroachment: No

Station(ft)	Elevation(ft)	Manning's N
-131.080	110.000	0.035000
-105.180	108.000	0.035000
-70.620	106.000	0.035000
0.000	104.000	0.035000
57.950	106.000	0.035000
81.130	108.000	0.035000
111.500	110.000	0.035000

Name: B-0 Group: DOWN-STREAM-ANA
Encroachment: No

Station(ft)	Elevation(ft)	Manning's N
-58.430	108.000	0.035000
0.000	106.000	0.035000
77.220	108.000	0.035000

Name: B-1 Group: DOWN-STREAM-ANA
Encroachment: No

Station(ft)	Elevation(ft)	Manning's N
-171.540	112.000	0.035000
-23.320	110.000	0.035000
18.470	110.000	0.035000
126.390	112.000	0.035000

Name: B-2 Group: DOWN-STREAM-ANA
Encroachment: No

Station(ft)	Elevation(ft)	Manning's N
-18.010	126.000	0.035000
-13.770	124.000	0.035000
-10.120	122.000	0.035000
-4.890	120.000	0.035000
5.480	120.000	0.035000
10.460	122.000	0.035000
15.480	124.000	0.035000
22.400	126.000	0.035000

Name: B-3 Group: DOWN-STREAM-ANA
Encroachment: No

Station(ft)	Elevation(ft)	Manning's N
-234.890	128.000	0.035000
-186.500	126.000	0.035000
-111.730	124.000	0.035000
46.820	124.000	0.035000
113.870	124.000	0.035000
134.220	124.000	0.035000
177.520	126.000	0.035000
238.820	128.000	0.035000

Name: BETHEL-CHURCH-R Group: DOWN-STREAM-ANA
Encroachment: No

BETHEL CHURCH RD AS WEIR

Station(ft)	Elevation(ft)	Manning's N
-84.000	152.330	0.012000
-50.540	151.990	0.012000
0.000	151.310	0.012000
30.570	151.140	0.012000
72.470	150.940	0.012000

Name: C-1 Group: DOWN-STREAM-ANA
Encroachment: No

Station(ft)	Elevation(ft)	Manning's N
-149.430	114.000	0.035000
-59.040	112.000	0.035000
0.000	110.000	0.035000
64.880	112.000	0.035000
117.190	114.000	0.035000

Name: C-2 Group: DOWN-STREAM-ANA
Encroachment: No

Station(ft)	Elevation(ft)	Manning's N
-182.370	120.000	0.035000
-142.530	118.000	0.035000
-61.050	116.000	0.035000
0.000	115.000	0.035000
69.860	116.000	0.035000
114.690	118.000	0.035000
139.950	120.000	0.035000

Name: D-1 Group: DOWN-STREAM-ANA
Encroachment: No

Station(ft)	Elevation(ft)	Manning's N
-96.450	120.000	0.035000
-61.000	120.000	0.035000
0.000	118.000	0.035000
56.200	120.000	0.035000
96.490	122.000	0.035000

Name: D-2 Group: DOWN-STREAM-ANA
Encroachment: No

Station(ft)	Elevation(ft)	Manning's N
-101.030	124.000	0.035000
70.410	122.000	0.035000
76.980	122.000	0.035000
151.890	124.000	0.035000

```
==========================================================================================
==== Pipes ===============================================================================
==========================================================================================

         Name: BETHEL-CHURCH-P     From Node: BETHEL-CHURCH-     Length(ft): 40.26
        Group: DOWN-STREAM-ANA       To Node: D-3                     Count: 1
                                                          Friction Equation: Automatic
               UPSTREAM       DOWNSTREAM                 Solution Algorithm: Most Restrictive
     Geometry: Circular       Circular                              Flow: Both
     Span(in): 24.00          24.00                      Entrance Loss Coef: 0.00
     Rise(in): 24.00          24.00                          Exit Loss Coef: 1.00
   Invert(ft): 148.500        148.200                        Bend Loss Coef: 0.00
  Manning's N: 0.120000       0.120000                     Outlet Ctrl Spec: Use dc or tw
 Top Clip(in): 0.000          0.000                          Inlet Ctrl Spec: Use dc
 Bot Clip(in): 0.000          0.000                        Stabilizer Option: None


Upstream FHWA Inlet Edge Description:
Circular CMP: Headwall

Downstream FHWA Inlet Edge Description:
Circular CMP: Headwall


-----------------------------------------------------------------------------------------------
         Name: POA                 From Node: BARINEAU-RD        Length(ft): 28.08
        Group: DOWN-STREAM-ANA       To Node: POA-BARINEAU            Count: 1
                                                          Friction Equation: Automatic
               UPSTREAM       DOWNSTREAM                 Solution Algorithm: Most Restrictive
     Geometry: Rectangular    Rectangular                           Flow: Both
     Span(in): 92.40          92.40                      Entrance Loss Coef: 0.00
     Rise(in): 48.00          48.00                          Exit Loss Coef: 1.00
   Invert(ft): 93.640         93.360                         Bend Loss Coef: 0.00
  Manning's N: 0.120000       0.120000                     Outlet Ctrl Spec: Use dc or tw
 Top Clip(in): 0.000          0.000                          Inlet Ctrl Spec: Use dc
 Bot Clip(in): 0.000          0.000                        Stabilizer Option: None


Upstream FHWA Inlet Edge Description:
Rectangular Box: 3/4" chamfers; 30° skewed headwall

Downstream FHWA Inlet Edge Description:
Rectangular Box: 0° wingwall flares


-----------------------------------------------------------------------------------------------
         Name: RAIL-ROAD-CROSS     From Node: D-3                Length(ft): 49.00
        Group: DOWN-STREAM-ANA       To Node: RAILROAD-1              Count: 1
                                                          Friction Equation: Automatic
               UPSTREAM       DOWNSTREAM                 Solution Algorithm: Automatic
     Geometry: Circular       Circular                              Flow: Positive
     Span(in): 42.00          42.00                      Entrance Loss Coef: 0.00
     Rise(in): 42.00          42.00                          Exit Loss Coef: 1.00
   Invert(ft): 115.880        115.800                        Bend Loss Coef: 0.00
  Manning's N: 0.120000       0.120000                     Outlet Ctrl Spec: Use dc or tw
 Top Clip(in): 0.000          0.000                          Inlet Ctrl Spec: Use dc
 Bot Clip(in): 0.000          0.000                        Stabilizer Option: None


Upstream FHWA Inlet Edge Description:
Circular Concrete: Square edge w/ headwall

Downstream FHWA Inlet Edge Description:
Circular Concrete: Groove end projecting


==========================================================================================
==== Channels ============================================================================
==========================================================================================

          Name: B-1 TO CONFLUEN     From Node: TRANS RD           Length(ft): 269.67
         Group: DOWN-STREAM-ANA       To Node: CONFLUENCE                Count: 1

                UPSTREAM       DOWNSTREAM                 Friction Equation: Automatic
      Geometry: Irregular      Irregular                 Solution Algorithm: Automatic
    Invert(ft): 110.000        106.000                               Flow: Positive
 TClpInitZ(ft): 9999.000       9999.000                    Contraction Coef: 0.100
```

```
   Manning's N:                                          Expansion Coef: 0.300
  Top Clip(ft):                                     Entrance Loss Coef: 0.000
  Bot Clip(ft):                                         Exit Loss Coef: 0.000
     Main XSec: B-1            B-0                      Outlet Ctrl Spec: Use dc or tw
  AuxElev1(ft): 0.000          0.000                      Inlet Ctrl Spec: Use dc
     Aux XSec1:                                          Stabilizer Option: None
  AuxElev2(ft): 0.000          0.000
     Aux XSec2:
 Top Width(ft):
     Depth(ft):
 Bot Width(ft):
  LtSdSlp(h/v):
  RtSdSlp(h/v):


-----------------------------------------------------------------------------------------------
          Name: B-2 TO B-1          From Node: B-2                Length(ft): 1170.00
         Group: DOWN-STREAM-ANA       To Node: TRANS RD                Count: 1

                UPSTREAM       DOWNSTREAM                 Friction Equation: Automatic
      Geometry: Irregular      Irregular                 Solution Algorithm: Automatic
    Invert(ft): 120.000        110.000                              Flow: Positive
 TClpInitZ(ft): 9999.000       9999.000                    Contraction Coef: 0.100
   Manning's N:                                              Expansion Coef: 0.300
  Top Clip(ft):                                     Entrance Loss Coef: 0.000
  Bot Clip(ft):                                         Exit Loss Coef: 0.000
     Main XSec: B-2            B-1                      Outlet Ctrl Spec: Use dc or tw
  AuxElev1(ft): 0.000          0.000                      Inlet Ctrl Spec: Use dc
     Aux XSec1:                                          Stabilizer Option: None
  AuxElev2(ft): 0.000          0.000
     Aux XSec2:
 Top Width(ft):
     Depth(ft):
 Bot Width(ft):
  LtSdSlp(h/v):
  RtSdSlp(h/v):


-----------------------------------------------------------------------------------------------
          Name: B-3 TO B-2          From Node: B-3                Length(ft): 700.00
         Group: DOWN-STREAM-ANA       To Node: B-2                     Count: 1

                UPSTREAM       DOWNSTREAM                 Friction Equation: Automatic
      Geometry: Irregular      Irregular                 Solution Algorithm: Automatic
    Invert(ft): 124.000        120.000                              Flow: Both
 TClpInitZ(ft): 9999.000       9999.000                    Contraction Coef: 0.100
   Manning's N:                                              Expansion Coef: 0.300
  Top Clip(ft):                                     Entrance Loss Coef: 0.000
  Bot Clip(ft):                                         Exit Loss Coef: 0.000
     Main XSec: B-3            B-2                      Outlet Ctrl Spec: Use dc or tw
  AuxElev1(ft): 0.000          0.000                      Inlet Ctrl Spec: Use dc
     Aux XSec1:                                          Stabilizer Option: None
  AuxElev2(ft): 0.000          0.000
     Aux XSec2:
 Top Width(ft):
     Depth(ft):
 Bot Width(ft):
  LtSdSlp(h/v):
  RtSdSlp(h/v):

natural channel with stones and weeds

-----------------------------------------------------------------------------------------------
          Name: CREEK-C             From Node: RAILROAD-1         Length(ft): 793.00
         Group: DOWN-STREAM-ANA       To Node: CONFLUENCE              Count: 1

                UPSTREAM       DOWNSTREAM                 Friction Equation: Automatic
      Geometry: Irregular      Irregular                 Solution Algorithm: Automatic
    Invert(ft): 115.000        110.000                              Flow: Positive
 TClpInitZ(ft): 9999.000       9999.000                    Contraction Coef: 0.100
   Manning's N:                                              Expansion Coef: 0.300
  Top Clip(ft):                                     Entrance Loss Coef: 0.000
  Bot Clip(ft):                                         Exit Loss Coef: 0.000
     Main XSec: C-2            C-1                      Outlet Ctrl Spec: Use dc or tw
  AuxElev1(ft): 0.000          0.000                      Inlet Ctrl Spec: Use dc
     Aux XSec1:                                          Stabilizer Option: None
  AuxElev2(ft): 0.000          0.000
     Aux XSec2:
 Top Width(ft):
     Depth(ft):
 Bot Width(ft):
```

```
  LtSdSlp(h/v):
  RtSdSlp(h/v):


-----------------------------------------------------------------------------------------------
          Name: WEST BRANCH         From Node: CONFLUENCE         Length(ft): 1696.00
         Group: DOWN-STREAM-ANA       To Node: BARINEAU-RD             Count: 1

                UPSTREAM       DOWNSTREAM                  Friction Equation: Automatic
      Geometry: Irregular      Irregular                  Solution Algorithm: Automatic
    Invert(ft): 104.000        94.000                                Flow: Positive
 TClpInitZ(ft): 9999.000       9999.000                     Contraction Coef: 0.100
   Manning's N:                                                 Expansion Coef: 0.300
  Top Clip(ft):                                            Entrance Loss Coef: 0.000
  Bot Clip(ft):                                                Exit Loss Coef: 0.000
     Main XSec: A-2            A-1                           Outlet Ctrl Spec: Use dc or tw
  AuxElev1(ft): 0.000          0.000                          Inlet Ctrl Spec: Use dc
     Aux XSec1:                                               Stabilizer Option: None
  AuxElev2(ft): 0.000          0.000
     Aux XSec2:
 Top Width(ft):
     Depth(ft):
 Bot Width(ft):
  LtSdSlp(h/v):
  RtSdSlp(h/v):


===============================================================================================
==== Weirs ====================================================================================
===============================================================================================

         Name: BARINEAU-RD-W       From Node: BARINEAU-RD
        Group: DOWN-STREAM-ANA       To Node: POA-BARINEAU
         Flow: Both                    Count: 1
         Type: Vertical: Paved      Geometry: Trapezoidal

            Bottom Width(ft): 100.00
        Left Side Slope(h/v): 0.01
       Right Side Slope(h/v): 0.00
                  Invert(ft): 101.830
      Control Elevation(ft): 101.830
     Struct Opening Dim(ft): 9999.00
                                          TABLE
             Bottom Clip(ft): 0.000
                Top Clip(ft): 0.000
        Weir Discharge Coef: 3.200
     Orifice Discharge Coef: 0.600


-----------------------------------------------------------------------------------------------
         Name: BETHEL CHURCH-W     From Node: BETHEL-CHURCH-
        Group: DOWN-STREAM-ANA       To Node: D-3
         Flow: Both                    Count: 1
         Type: Vertical: Paved      Geometry: Irregular

                          XSec: BETHEL-CHURCH-R
                  Invert(ft): 151.310
      Control Elevation(ft): 151.310
     Struct Opening Dim(ft): 9999.00
                                          TABLE
             Bottom Clip(ft): 0.000
                Top Clip(ft): 0.000
        Weir Discharge Coef: 3.200
     Orifice Discharge Coef: 0.600


-----------------------------------------------------------------------------------------------
         Name: E-WEIR              From Node: E-SITE
        Group: DOWN-STREAM-ANA       To Node: B-3
         Flow: Both                    Count: 1
         Type: Vertical: Mavis      Geometry: Trapezoidal

            Bottom Width(ft): 50.00
        Left Side Slope(h/v): 5.00
       Right Side Slope(h/v): 5.00
                  Invert(ft): 126.100
      Control Elevation(ft): 126.100
     Struct Opening Dim(ft): 9999.00
                                          TABLE
```

```
            Bottom Clip(ft): 0.000
               Top Clip(ft): 0.000
         Weir Discharge Coef: 3.200
      Orifice Discharge Coef: 0.600



-----------------------------------------------------------------------------------------------
         Name: RAIL ROAD-W         From Node: D-3
        Group: DOWN-STREAM-ANA       To Node: RAILROAD-1
         Flow: Both                    Count: 1
         Type: Vertical: Fread      Geometry: Rectangular

                    Span(in): 1248.00
                    Rise(in): 30.00
                  Invert(ft): 126.650
       Control Elevation(ft): 126.650
                                          TABLE
            Bottom Clip(in): 0.000
               Top Clip(in): 0.000
         Weir Discharge Coef: 3.200
      Orifice Discharge Coef: 0.600



===============================================================================================
==== Hydrology Simulations ====================================================================
===============================================================================================

         Name: 100yr-1hr
     Filename: C:\Projects\100yr-1hr.R32

      Override Defaults: Yes
    Storm Duration(hrs): 1.00
          Rainfall File: Fdot-1
    Rainfall Amount(in): 4.40

Time(hrs)       Print Inc(min)
--------------- ---------------
2.000           2.00

-----------------------------------------------------------------------------------------------
         Name: 100yr-24hr
     Filename: C:\Projects\100yr-24hr.R32

      Override Defaults: Yes
    Storm Duration(hrs): 24.00
          Rainfall File: Fdot-24
    Rainfall Amount(in): 10.90

Time(hrs)       Print Inc(min)
--------------- ---------------
24.000          2.00

-----------------------------------------------------------------------------------------------
         Name: 100yr-2hr
     Filename: C:\Projects\100yr-2hr.R32

      Override Defaults: Yes
    Storm Duration(hrs): 2.00
          Rainfall File: Fdot-2
    Rainfall Amount(in): 5.80

Time(hrs)       Print Inc(min)
--------------- ---------------
2.000           2.00

-----------------------------------------------------------------------------------------------
         Name: 100yr-4hr
     Filename: C:\Projects\100yr-4hr.R32

      Override Defaults: Yes
    Storm Duration(hrs): 4.00
          Rainfall File: Fdot-4
    Rainfall Amount(in): 7.20

Time(hrs)       Print Inc(min)
--------------- ---------------
4.000           2.00

-----------------------------------------------------------------------------------------------
         Name: 100yr-8hr
     Filename: C:\Projects\100yr-8hr.R32
```

```
      Override Defaults: Yes
    Storm Duration(hrs): 8.00
          Rainfall File: Fdot-8
    Rainfall Amount(in): 8.90

Time(hrs)       Print Inc(min)
--------------- ---------------
8.000           2.00

-----------------------------------------------------------------------------------------------
         Name: 10yr-1hr
     Filename: C:\Projects\10yr-1hr.R32

      Override Defaults: Yes
    Storm Duration(hrs): 1.00
          Rainfall File: Fdot-1
    Rainfall Amount(in): 3.20

Time(hrs)       Print Inc(min)
--------------- ---------------
2.000           2.00

-----------------------------------------------------------------------------------------------
         Name: 10yr-24hr
     Filename: C:\Projects\10yr-24hr.R32

      Override Defaults: Yes
    Storm Duration(hrs): 24.00
          Rainfall File: Fdot-24
    Rainfall Amount(in): 7.50

Time(hrs)       Print Inc(min)
--------------- ---------------
24.000          2.00

-----------------------------------------------------------------------------------------------
         Name: 10yr-2hr
     Filename: C:\Projects\10yr-2hr.R32

      Override Defaults: Yes
    Storm Duration(hrs): 2.00
          Rainfall File: Fdot-2
    Rainfall Amount(in): 4.10

Time(hrs)       Print Inc(min)
--------------- ---------------
2.000           2.00

-----------------------------------------------------------------------------------------------
         Name: 10yr-4hr
     Filename: C:\Projects\10yr-4hr.R32

      Override Defaults: Yes
    Storm Duration(hrs): 4.00
          Rainfall File: Fdot-4
    Rainfall Amount(in): 5.00

Time(hrs)       Print Inc(min)
--------------- ---------------
4.000           2.00

-----------------------------------------------------------------------------------------------
         Name: 10yr-8hr
     Filename: C:\Projects\10yr-8hr.R32

      Override Defaults: Yes
    Storm Duration(hrs): 8.00
          Rainfall File: Fdot-8
    Rainfall Amount(in): 6.20

Time(hrs)       Print Inc(min)
--------------- ---------------
8.000           2.00

-----------------------------------------------------------------------------------------------
         Name: 25YR-1HR
     Filename: C:\Projects\25YR-1HR.R32

      Override Defaults: Yes
    Storm Duration(hrs): 1.00
          Rainfall File: Fdot-1
    Rainfall Amount(in): 3.70
```

```
Time(hrs)       Print Inc(min)
--------------- ---------------
2.000           2.00

-----------------------------------------------------------------------------------------------
         Name: 25YR-24HR
     Filename: C:\Projects\25YR-24HR.R32

      Override Defaults: Yes
    Storm Duration(hrs): 24.00
          Rainfall File: Fdot-24
    Rainfall Amount(in): 8.50

Time(hrs)       Print Inc(min)
--------------- ---------------
24.000          2.00

-----------------------------------------------------------------------------------------------
         Name: 25YR-2HR
     Filename: C:\Projects\25YR-2HR.R32

      Override Defaults: Yes
    Storm Duration(hrs): 2.00
          Rainfall File: Fdot-2
    Rainfall Amount(in): 4.70

Time(hrs)       Print Inc(min)
--------------- ---------------
2.000           2.00

-----------------------------------------------------------------------------------------------
         Name: 25YR-4HR
     Filename: C:\Projects\25YR-4HR.R32

      Override Defaults: Yes
    Storm Duration(hrs): 4.00
          Rainfall File: Fdot-4
    Rainfall Amount(in): 5.90

Time(hrs)       Print Inc(min)
--------------- ---------------
4.000           2.00

-----------------------------------------------------------------------------------------------
         Name: 25YR-8HR
     Filename: C:\Projects\25YR-8HR.R32

      Override Defaults: Yes
    Storm Duration(hrs): 8.00
          Rainfall File: Fdot-8
    Rainfall Amount(in): 7.40

Time(hrs)       Print Inc(min)
--------------- ---------------
8.000           2.00

-----------------------------------------------------------------------------------------------
         Name: 2yr-1hr
     Filename: C:\Projects\2yr-1hr.R32

      Override Defaults: Yes
    Storm Duration(hrs): 1.00
          Rainfall File: Fdot-1
    Rainfall Amount(in): 2.30

Time(hrs)       Print Inc(min)
--------------- ---------------
2.000           2.00

-----------------------------------------------------------------------------------------------
         Name: 2yr-24hr
     Filename: C:\Projects\2yr-24hr.R32

      Override Defaults: Yes
    Storm Duration(hrs): 24.00
          Rainfall File: Fdot-24
    Rainfall Amount(in): 4.70

Time(hrs)       Print Inc(min)
--------------- ---------------
24.000          2.00
```

```
-----------------------------------------------------------------------------------------------
         Name: 2yr-2hr
     Filename: C:\Projects\2yr-2hr.R32

      Override Defaults: Yes
    Storm Duration(hrs): 2.00
          Rainfall File: Fdot-2
    Rainfall Amount(in): 3.00

Time(hrs)       Print Inc(min)
--------------- ---------------
2.000           2.00

-----------------------------------------------------------------------------------------------
         Name: 2yr-4hr
     Filename: C:\Projects\2yr-4hr.R32

      Override Defaults: Yes
    Storm Duration(hrs): 4.00
          Rainfall File: Fdot-4
    Rainfall Amount(in): 3.50

Time(hrs)       Print Inc(min)
--------------- ---------------
4.000           2.00

-----------------------------------------------------------------------------------------------
         Name: 2yr-8hr
     Filename: C:\Projects\2yr-8hr.R32

      Override Defaults: Yes
    Storm Duration(hrs): 8.00
          Rainfall File: Fdot-8
    Rainfall Amount(in): 4.20

Time(hrs)       Print Inc(min)
--------------- ---------------
8.000           2.00

-----------------------------------------------------------------------------------------------
         Name: 50yr-1hr
     Filename: C:\Projects\50yr-1hr.R32

      Override Defaults: Yes
    Storm Duration(hrs): 1.00
          Rainfall File: Fdot-1
    Rainfall Amount(in): 4.00

Time(hrs)       Print Inc(min)
--------------- ---------------
2.000           2.00

-----------------------------------------------------------------------------------------------
         Name: 50yr-24hr
     Filename: C:\Projects\50yr-24hr.R32

      Override Defaults: Yes
    Storm Duration(hrs): 24.00
          Rainfall File: Fdot-24
    Rainfall Amount(in): 9.60

Time(hrs)       Print Inc(min)
--------------- ---------------
24.000          2.00

-----------------------------------------------------------------------------------------------
         Name: 50yr-2hr
     Filename: C:\Projects\50yr-2hr.R32

      Override Defaults: Yes
    Storm Duration(hrs): 2.00
          Rainfall File: Fdot-2
    Rainfall Amount(in): 5.20

Time(hrs)       Print Inc(min)
--------------- ---------------
2.000           2.00

-----------------------------------------------------------------------------------------------
         Name: 50yr-4hr
     Filename: C:\Projects\50yr-4hr.R32

      Override Defaults: Yes
```

```
    Storm Duration(hrs): 4.00
          Rainfall File: Fdot-4
    Rainfall Amount(in): 6.40

Time(hrs)       Print Inc(min)
--------------- ---------------
4.000           2.00

-----------------------------------------------------------------------------------------------
         Name: 50yr-8hr
     Filename: C:\Projects\50yr-8hr.R32

      Override Defaults: Yes
    Storm Duration(hrs): 8.00
          Rainfall File: Fdot-8
    Rainfall Amount(in): 8.00

Time(hrs)       Print Inc(min)
--------------- ---------------
8.000           2.00

-----------------------------------------------------------------------------------------------
         Name: 5yr-1hr
     Filename: C:\Projects\5yr-1hr.R32

      Override Defaults: Yes
    Storm Duration(hrs): 1.00
          Rainfall File: Fdot-1
    Rainfall Amount(in): 2.80

Time(hrs)       Print Inc(min)
--------------- ---------------
2.000           2.00

-----------------------------------------------------------------------------------------------
         Name: 5yr-24hr
     Filename: C:\Projects\5yr-24hr.R32

      Override Defaults: Yes
    Storm Duration(hrs): 24.00
          Rainfall File: Fdot-24
    Rainfall Amount(in): 6.40

Time(hrs)       Print Inc(min)
--------------- ---------------
24.000          2.00

-----------------------------------------------------------------------------------------------
         Name: 5yr-2hr
     Filename: C:\Projects\5yr-2hr.R32

      Override Defaults: Yes
    Storm Duration(hrs): 2.00
          Rainfall File: Fdot-2
    Rainfall Amount(in): 3.60

Time(hrs)       Print Inc(min)
--------------- ---------------
2.000           2.00

-----------------------------------------------------------------------------------------------
         Name: 5yr-4hr
     Filename: C:\Projects\5yr-4hr.R32

      Override Defaults: Yes
    Storm Duration(hrs): 4.00
          Rainfall File: Fdot-4
    Rainfall Amount(in): 4.40

Time(hrs)       Print Inc(min)
--------------- ---------------
4.000           2.00

-----------------------------------------------------------------------------------------------
         Name: 5yr-8hr
     Filename: C:\Projects\5yr-8hr.R32

      Override Defaults: Yes
    Storm Duration(hrs): 8.00
          Rainfall File: Fdot-8
    Rainfall Amount(in): 5.50

Time(hrs)       Print Inc(min)
```

```
--------------- ---------------
8.000           2.00

==========================================================================================
==== Routing Simulations ================================================================
==========================================================================================

         Name: 100yr-1hr           Hydrology Sim: 100yr-1hr
     Filename: C:\Projects\100yr-1hr.I32

      Execute: Yes         Restart: No            Patch: No
  Alternative: No

        Max Delta Z(ft): 1.00                     Delta Z Factor: 0.00500
    Time Step Optimizer: 10.000
        Start Time(hrs): 0.000                     End Time(hrs): 2.00
     Min Calc Time(sec): 0.5000               Max Calc Time(sec): 60.0000
        Boundary Stages:                          Boundary Flows:


Time(hrs)       Print Inc(min)
--------------- ---------------
2.000           2.000

Group           Run
--------------- -----
DOWN-STREAM-ANA Yes


-------------------------------------------------------------------------------------------------
         Name: 100yr-24hr          Hydrology Sim: 100yr-24hr
     Filename: C:\Projects\100yr-24hr.I32

      Execute: Yes         Restart: No            Patch: No
  Alternative: No

        Max Delta Z(ft): 1.00                     Delta Z Factor: 0.00500
    Time Step Optimizer: 10.000
        Start Time(hrs): 0.000                     End Time(hrs): 24.00
     Min Calc Time(sec): 0.5000               Max Calc Time(sec): 60.0000
        Boundary Stages:                          Boundary Flows:


Time(hrs)       Print Inc(min)
--------------- ---------------
24.000          2.000

Group           Run
--------------- -----
DOWN-STREAM-ANA Yes


-------------------------------------------------------------------------------------------------
         Name: 100yr-2hr           Hydrology Sim: 100yr-2hr
     Filename: C:\Projects\100yr-2hr.I32

      Execute: Yes         Restart: No            Patch: No
  Alternative: No

        Max Delta Z(ft): 1.00                     Delta Z Factor: 0.00500
    Time Step Optimizer: 10.000
        Start Time(hrs): 0.000                     End Time(hrs): 2.00
     Min Calc Time(sec): 0.5000               Max Calc Time(sec): 60.0000
        Boundary Stages:                          Boundary Flows:


Time(hrs)       Print Inc(min)
--------------- ---------------
2.000           2.000

Group           Run
--------------- -----
DOWN-STREAM-ANA Yes


-------------------------------------------------------------------------------------------------
         Name: 100yr-4hr           Hydrology Sim: 100yr-4hr
     Filename: C:\Projects\100yr-4hr.I32

      Execute: Yes         Restart: No            Patch: No
```

```
  Alternative: No

        Max Delta Z(ft): 1.00                     Delta Z Factor: 0.00500
    Time Step Optimizer: 10.000
        Start Time(hrs): 0.000                     End Time(hrs): 4.00
     Min Calc Time(sec): 0.5000               Max Calc Time(sec): 60.0000
        Boundary Stages:                          Boundary Flows:



Time(hrs)       Print Inc(min)
--------------- ---------------
4.000           2.000

Group           Run
--------------- -----
DOWN-STREAM-ANA Yes


-----------------------------------------------------------------------------------------------
         Name: 100yr-8hr           Hydrology Sim: 100yr-8hr
     Filename: C:\Projects\100yr-8hr.I32

      Execute: Yes         Restart: No            Patch: No
  Alternative: No

        Max Delta Z(ft): 1.00                     Delta Z Factor: 0.00500
    Time Step Optimizer: 10.000
        Start Time(hrs): 0.000                     End Time(hrs): 8.00
     Min Calc Time(sec): 0.5000               Max Calc Time(sec): 60.0000
        Boundary Stages:                          Boundary Flows:



Time(hrs)       Print Inc(min)
--------------- ---------------
8.000           2.000

Group           Run
--------------- -----
DOWN-STREAM-ANA Yes


-----------------------------------------------------------------------------------------------
         Name: 10yr-1hr            Hydrology Sim: 10YR-1HR
     Filename: C:\Projects\10yr-1hr.I32

      Execute: Yes         Restart: No            Patch: No
  Alternative: No

        Max Delta Z(ft): 1.00                     Delta Z Factor: 0.00500
    Time Step Optimizer: 10.000
        Start Time(hrs): 0.000                     End Time(hrs): 2.00
     Min Calc Time(sec): 0.5000               Max Calc Time(sec): 60.0000
        Boundary Stages:                          Boundary Flows:



Time(hrs)       Print Inc(min)
--------------- ---------------
2.000           2.000

Group           Run
--------------- -----
DOWN-STREAM-ANA Yes


-----------------------------------------------------------------------------------------------
         Name: 10yr-24hr           Hydrology Sim: 10YR-24HR
     Filename: C:\Projects\10yr-24hr.I32

      Execute: Yes         Restart: No            Patch: No
  Alternative: No

        Max Delta Z(ft): 1.00                     Delta Z Factor: 0.00500
    Time Step Optimizer: 10.000
        Start Time(hrs): 0.000                     End Time(hrs): 24.00
     Min Calc Time(sec): 0.5000               Max Calc Time(sec): 60.0000
        Boundary Stages:                          Boundary Flows:



Time(hrs)       Print Inc(min)
```

```
--------------- ---------------
24.000          2.000

Group           Run
--------------- -----
DOWN-STREAM-ANA Yes


-------------------------------------------------------------------------------------------------
         Name: 10yr-2hr            Hydrology Sim: 10YR-2HR
     Filename: C:\Projects\10yr-2hr.I32

      Execute: Yes         Restart: No            Patch: No
  Alternative: No

        Max Delta Z(ft): 1.00                     Delta Z Factor: 0.00500
    Time Step Optimizer: 10.000
        Start Time(hrs): 0.000                     End Time(hrs): 2.00
     Min Calc Time(sec): 0.5000               Max Calc Time(sec): 60.0000
        Boundary Stages:                          Boundary Flows:



Time(hrs)       Print Inc(min)
--------------- ---------------
2.000           2.000

Group           Run
--------------- -----
DOWN-STREAM-ANA Yes


-------------------------------------------------------------------------------------------------
         Name: 10yr-4hr            Hydrology Sim: 10YR-4HR
     Filename: C:\Projects\10yr-4hr.I32

      Execute: Yes         Restart: No            Patch: No
  Alternative: No

        Max Delta Z(ft): 1.00                     Delta Z Factor: 0.00500
    Time Step Optimizer: 10.000
        Start Time(hrs): 0.000                     End Time(hrs): 4.00
     Min Calc Time(sec): 0.5000               Max Calc Time(sec): 60.0000
        Boundary Stages:                          Boundary Flows:



Time(hrs)       Print Inc(min)
--------------- ---------------
4.000           2.000

Group           Run
--------------- -----
DOWN-STREAM-ANA Yes


-------------------------------------------------------------------------------------------------
         Name: 10yr-8hr            Hydrology Sim: 10YR-8HR
     Filename: C:\Projects\10yr-8hr.I32

      Execute: Yes         Restart: No            Patch: No
  Alternative: No

        Max Delta Z(ft): 1.00                     Delta Z Factor: 0.00500
    Time Step Optimizer: 10.000
        Start Time(hrs): 0.000                     End Time(hrs): 8.00
     Min Calc Time(sec): 0.5000               Max Calc Time(sec): 60.0000
        Boundary Stages:                          Boundary Flows:



Time(hrs)       Print Inc(min)
--------------- ---------------
8.000           2.000

Group           Run
--------------- -----
DOWN-STREAM-ANA Yes


-------------------------------------------------------------------------------------------------
         Name: 25yr-1hr            Hydrology Sim: 25YR-1HR
     Filename: C:\Projects\25yr-1hr.I32
```

```
      Execute: Yes         Restart: No            Patch: No
  Alternative: No

        Max Delta Z(ft): 1.00                     Delta Z Factor: 0.00500
    Time Step Optimizer: 10.000
        Start Time(hrs): 0.000                     End Time(hrs): 2.00
     Min Calc Time(sec): 0.5000               Max Calc Time(sec): 60.0000
        Boundary Stages:                          Boundary Flows:


Time(hrs)       Print Inc(min)
--------------- ---------------
2.000           2.000

Group           Run
--------------- -----
DOWN-STREAM-ANA Yes


-------------------------------------------------------------------------------------------------
         Name: 25yr-24hr           Hydrology Sim: 25YR-24HR
     Filename: C:\Projects\25yr-24hr.I32

      Execute: Yes         Restart: No            Patch: No
  Alternative: No

        Max Delta Z(ft): 1.00                     Delta Z Factor: 0.00500
    Time Step Optimizer: 10.000
        Start Time(hrs): 0.000                     End Time(hrs): 24.00
     Min Calc Time(sec): 0.5000               Max Calc Time(sec): 60.0000
        Boundary Stages:                          Boundary Flows:


Time(hrs)       Print Inc(min)
--------------- ---------------
24.000          2.000

Group           Run
--------------- -----
DOWN-STREAM-ANA Yes


-------------------------------------------------------------------------------------------------
         Name: 25yr-2hr            Hydrology Sim: 25YR-2HR
     Filename: C:\Projects\25yr-2hr.I32

      Execute: Yes         Restart: No            Patch: No
  Alternative: No

        Max Delta Z(ft): 1.00                     Delta Z Factor: 0.00500
    Time Step Optimizer: 10.000
        Start Time(hrs): 0.000                     End Time(hrs): 2.00
     Min Calc Time(sec): 0.5000               Max Calc Time(sec): 60.0000
        Boundary Stages:                          Boundary Flows:


Time(hrs)       Print Inc(min)
--------------- ---------------
2.000           2.000

Group           Run
--------------- -----
DOWN-STREAM-ANA Yes


-------------------------------------------------------------------------------------------------
         Name: 25yr-4hr            Hydrology Sim: 25YR-4HR
     Filename: C:\Projects\25yr-4hr.I32

      Execute: Yes         Restart: No            Patch: No
  Alternative: No

        Max Delta Z(ft): 1.00                     Delta Z Factor: 0.00500
    Time Step Optimizer: 10.000
        Start Time(hrs): 0.000                     End Time(hrs): 4.00
     Min Calc Time(sec): 0.5000               Max Calc Time(sec): 60.0000
        Boundary Stages:                          Boundary Flows:
```

```
Time(hrs)       Print Inc(min)
--------------- ---------------
4.000           2.000

Group           Run
--------------- -----
DOWN-STREAM-ANA Yes


-----------------------------------------------------------------------------------------------
         Name: 25yr-8hr            Hydrology Sim: 25YR-8HR
     Filename: C:\Projects\25yr-8hr.I32

      Execute: Yes         Restart: No            Patch: No
  Alternative: No

        Max Delta Z(ft): 1.00                     Delta Z Factor: 0.00500
    Time Step Optimizer: 10.000
        Start Time(hrs): 0.000                     End Time(hrs): 8.00
     Min Calc Time(sec): 0.5000               Max Calc Time(sec): 60.0000
        Boundary Stages:                          Boundary Flows:


Time(hrs)       Print Inc(min)
--------------- ---------------
8.000           2.000

Group           Run
--------------- -----
DOWN-STREAM-ANA Yes


-----------------------------------------------------------------------------------------------
         Name: 2yr-1hr             Hydrology Sim: 2YR-1HR
     Filename: C:\Projects\2yr-1hr.I32

      Execute: Yes         Restart: No            Patch: No
  Alternative: No

        Max Delta Z(ft): 1.00                     Delta Z Factor: 0.00500
    Time Step Optimizer: 10.000
        Start Time(hrs): 0.000                     End Time(hrs): 2.00
     Min Calc Time(sec): 0.5000               Max Calc Time(sec): 60.0000
        Boundary Stages:                          Boundary Flows:


Time(hrs)       Print Inc(min)
--------------- ---------------
2.000           2.000

Group           Run
--------------- -----
DOWN-STREAM-ANA Yes


-----------------------------------------------------------------------------------------------
         Name: 2yr-24hr            Hydrology Sim: 2YR-24HR
     Filename: C:\Projects\2yr-24hr.I32

      Execute: Yes         Restart: No            Patch: No
  Alternative: No

        Max Delta Z(ft): 1.00                     Delta Z Factor: 0.00500
    Time Step Optimizer: 10.000
        Start Time(hrs): 0.000                     End Time(hrs): 24.00
     Min Calc Time(sec): 0.5000               Max Calc Time(sec): 60.0000
        Boundary Stages:                          Boundary Flows:


Time(hrs)       Print Inc(min)
--------------- ---------------
24.000          2.000

Group           Run
--------------- -----
DOWN-STREAM-ANA Yes


-----------------------------------------------------------------------------------------------
```

```
         Name: 2yr-2hr             Hydrology Sim: 2YR-2HR
     Filename: C:\Projects\2yr-2hr.I32

      Execute: Yes         Restart: No            Patch: No
  Alternative: No

        Max Delta Z(ft): 1.00                     Delta Z Factor: 0.00500
    Time Step Optimizer: 10.000
        Start Time(hrs): 0.000                     End Time(hrs): 2.00
     Min Calc Time(sec): 0.5000               Max Calc Time(sec): 60.0000
        Boundary Stages:                          Boundary Flows:


Time(hrs)       Print Inc(min)
--------------- ---------------
2.000           2.000

Group           Run
--------------- -----
DOWN-STREAM-ANA Yes


-----------------------------------------------------------------------------------------------
         Name: 2yr-4hr             Hydrology Sim: 2YR-4HR
     Filename: C:\Projects\2yr-4hr.I32

      Execute: Yes         Restart: No            Patch: No
  Alternative: No

        Max Delta Z(ft): 1.00                     Delta Z Factor: 0.00500
    Time Step Optimizer: 10.000
        Start Time(hrs): 0.000                     End Time(hrs): 4.00
     Min Calc Time(sec): 0.5000               Max Calc Time(sec): 60.0000
        Boundary Stages:                          Boundary Flows:


Time(hrs)       Print Inc(min)
--------------- ---------------
4.000           2.000

Group           Run
--------------- -----
DOWN-STREAM-ANA Yes


-----------------------------------------------------------------------------------------------
         Name: 2yr-8hr             Hydrology Sim: 2YR-8HR
     Filename: C:\Projects\2yr-8hr.I32

      Execute: Yes         Restart: No            Patch: No
  Alternative: No

        Max Delta Z(ft): 1.00                     Delta Z Factor: 0.00500
    Time Step Optimizer: 10.000
        Start Time(hrs): 0.000                     End Time(hrs): 8.00
     Min Calc Time(sec): 0.5000               Max Calc Time(sec): 60.0000
        Boundary Stages:                          Boundary Flows:


Time(hrs)       Print Inc(min)
--------------- ---------------
8.000           2.000

Group           Run
--------------- -----
DOWN-STREAM-ANA Yes


-----------------------------------------------------------------------------------------------
         Name: 50yr-1hr            Hydrology Sim: 50YR-1HR
     Filename: C:\Projects\50yr-1hr.I32

      Execute: Yes         Restart: No            Patch: No
  Alternative: No

        Max Delta Z(ft): 1.00                     Delta Z Factor: 0.00500
    Time Step Optimizer: 10.000
        Start Time(hrs): 0.000                     End Time(hrs): 2.00
     Min Calc Time(sec): 0.5000               Max Calc Time(sec): 60.0000
        Boundary Stages:                          Boundary Flows:
```

```
Time(hrs)       Print Inc(min)
--------------- ---------------
2.000           2.000

Group           Run
--------------- -----
DOWN-STREAM-ANA Yes


-----------------------------------------------------------------------------------------------
         Name: 50yr-24hr           Hydrology Sim: 50YR-24HR
     Filename: C:\Projects\50yr-24hr.I32

      Execute: Yes         Restart: No            Patch: No
  Alternative: No

        Max Delta Z(ft): 1.00                     Delta Z Factor: 0.00500
    Time Step Optimizer: 10.000
        Start Time(hrs): 0.000                     End Time(hrs): 24.00
     Min Calc Time(sec): 0.5000               Max Calc Time(sec): 60.0000
        Boundary Stages:                          Boundary Flows:


Time(hrs)       Print Inc(min)
--------------- ---------------
24.000          2.000

Group           Run
--------------- -----
DOWN-STREAM-ANA Yes


-----------------------------------------------------------------------------------------------
         Name: 50yr-2hr            Hydrology Sim: 50YR-2HR
     Filename: C:\Projects\50yr-2hr.I32

      Execute: Yes         Restart: No            Patch: No
  Alternative: No

        Max Delta Z(ft): 1.00                     Delta Z Factor: 0.00500
    Time Step Optimizer: 10.000
        Start Time(hrs): 0.000                     End Time(hrs): 2.00
     Min Calc Time(sec): 0.5000               Max Calc Time(sec): 60.0000
        Boundary Stages:                          Boundary Flows:


Time(hrs)       Print Inc(min)
--------------- ---------------
2.000           2.000

Group           Run
--------------- -----
DOWN-STREAM-ANA Yes


-----------------------------------------------------------------------------------------------
         Name: 50yr-4hr            Hydrology Sim: 50YR-4HR
     Filename: C:\Projects\50yr-4hr.I32

      Execute: Yes         Restart: No            Patch: No
  Alternative: No

        Max Delta Z(ft): 1.00                     Delta Z Factor: 0.00500
    Time Step Optimizer: 10.000
        Start Time(hrs): 0.000                     End Time(hrs): 4.00
     Min Calc Time(sec): 0.5000               Max Calc Time(sec): 60.0000
        Boundary Stages:                          Boundary Flows:


Time(hrs)       Print Inc(min)
--------------- ---------------
4.000           2.000

Group           Run
--------------- -----
DOWN-STREAM-ANA Yes
```

```
-----------------------------------------------------------------------------------------------
         Name: 50yr-8hr            Hydrology Sim: 50YR-8HR
     Filename: C:\Projects\50yr-8hr.I32

      Execute: Yes         Restart: No            Patch: No
  Alternative: No

        Max Delta Z(ft): 1.00                     Delta Z Factor: 0.00500
    Time Step Optimizer: 10.000
        Start Time(hrs): 0.000                     End Time(hrs): 8.00
     Min Calc Time(sec): 0.5000               Max Calc Time(sec): 60.0000
        Boundary Stages:                          Boundary Flows:


Time(hrs)       Print Inc(min)
--------------- ---------------
8.000           2.000

Group           Run
--------------- -----
DOWN-STREAM-ANA Yes


-----------------------------------------------------------------------------------------------
         Name: 5yr-1hr             Hydrology Sim: 5YR-1HR
     Filename: C:\Projects\5yr-1hr.I32

      Execute: Yes         Restart: No            Patch: No
  Alternative: No

        Max Delta Z(ft): 1.00                     Delta Z Factor: 0.00500
    Time Step Optimizer: 10.000
        Start Time(hrs): 0.000                     End Time(hrs): 2.00
     Min Calc Time(sec): 0.5000               Max Calc Time(sec): 60.0000
        Boundary Stages:                          Boundary Flows:


Time(hrs)       Print Inc(min)
--------------- ---------------
2.000           2.000

Group           Run
--------------- -----
DOWN-STREAM-ANA Yes


-----------------------------------------------------------------------------------------------
         Name: 5yr-24hr            Hydrology Sim: 5YR-24HR
     Filename: C:\Projects\5yr-24hr.I32

      Execute: Yes         Restart: No            Patch: No
  Alternative: No

        Max Delta Z(ft): 1.00                     Delta Z Factor: 0.00500
    Time Step Optimizer: 10.000
        Start Time(hrs): 0.000                     End Time(hrs): 24.00
     Min Calc Time(sec): 0.5000               Max Calc Time(sec): 60.0000
        Boundary Stages:                          Boundary Flows:


Time(hrs)       Print Inc(min)
--------------- ---------------
24.000          2.000

Group           Run
--------------- -----
DOWN-STREAM-ANA Yes


-----------------------------------------------------------------------------------------------
         Name: 5yr-2hr             Hydrology Sim: 5YR-2HR
     Filename: C:\Projects\5yr-2hr.I32

      Execute: Yes         Restart: No            Patch: No
  Alternative: No

        Max Delta Z(ft): 1.00                     Delta Z Factor: 0.00500
    Time Step Optimizer: 10.000
        Start Time(hrs): 0.000                     End Time(hrs): 2.00
```

```
     Min Calc Time(sec): 0.5000              Max Calc Time(sec): 60.0000
        Boundary Stages:                         Boundary Flows:


Time(hrs)       Print Inc(min)
--------------- ---------------
2.000           2.000

Group           Run
--------------- -----
DOWN-STREAM-ANA Yes


-------------------------------------------------------------------------------------------------
         Name: 5yr-4hr             Hydrology Sim: 5YR-4HR
     Filename: C:\Projects\5yr-4hr.I32

      Execute: Yes         Restart: No            Patch: No
  Alternative: No

        Max Delta Z(ft): 1.00                     Delta Z Factor: 0.00500
    Time Step Optimizer: 10.000
        Start Time(hrs): 0.000                     End Time(hrs): 4.00
     Min Calc Time(sec): 0.5000              Max Calc Time(sec): 60.0000
        Boundary Stages:                         Boundary Flows:


Time(hrs)       Print Inc(min)
--------------- ---------------
4.000           2.000

Group           Run
--------------- -----
DOWN-STREAM-ANA Yes


-------------------------------------------------------------------------------------------------
         Name: 5yr-8hr             Hydrology Sim: 5YR-8HR
     Filename: C:\Projects\5yr-8hr.I32

      Execute: Yes         Restart: No            Patch: No
  Alternative: No

        Max Delta Z(ft): 1.00                     Delta Z Factor: 0.00500
    Time Step Optimizer: 10.000
        Start Time(hrs): 0.000                     End Time(hrs): 8.00
     Min Calc Time(sec): 0.5000              Max Calc Time(sec): 60.0000
        Boundary Stages:                         Boundary Flows:


Time(hrs)       Print Inc(min)
--------------- ---------------
8.000           2.000

Group           Run
--------------- -----
DOWN-STREAM-ANA Yes


==========================================================================================
==== Boundary Conditions ================================================================
==========================================================================================

      Name:                       Node: E-South               Type: Stage

      Time(hrs)       Stage(ft)
--------------- ---------------
          0.000          85.000
        900.000          85.000
```

Downstream Analysis Post-Development Input

```
==========================================================================================
==== Basins ==============================================================================
==========================================================================================

         Name: B-2                      Node: B-2                    Status: Onsite
        Group: DOWN-STREAM-ANA          Type: SCS Unit Hydrograph CN

        Unit Hydrograph: Uh323                    Peaking Factor: 323.0
          Rainfall File:                     Storm Duration(hrs): 0.00
    Rainfall Amount(in): 0.000                 Time of Conc(min): 42.00
               Area(ac): 83.660                  Time Shift(hrs): 0.00
           Curve Number: 32.70              Max Allowable Q(cfs): 999999.000
                DCIA(%): 0.00



------------------------------------------------------------------------------------------
         Name: BARINEAU-RD              Node: BARINEAU-RD            Status: Onsite
        Group: DOWN-STREAM-ANA          Type: SCS Unit Hydrograph CN

        Unit Hydrograph: Uh323                    Peaking Factor: 323.0
          Rainfall File:                     Storm Duration(hrs): 0.00
    Rainfall Amount(in): 0.000                 Time of Conc(min): 30.00
               Area(ac): 38.940                  Time Shift(hrs): 0.00
           Curve Number: 31.00              Max Allowable Q(cfs): 999999.000
                DCIA(%): 0.00



------------------------------------------------------------------------------------------
         Name: BETHEL-CHURCH            Node: BETHEL-CHURCH-         Status: Onsite
        Group: DOWN-STREAM-ANA          Type: SCS Unit Hydrograph CN

        Unit Hydrograph: Uh323                    Peaking Factor: 323.0
          Rainfall File:                     Storm Duration(hrs): 0.00
    Rainfall Amount(in): 0.000                 Time of Conc(min): 10.00
               Area(ac): 31.480                  Time Shift(hrs): 0.00
           Curve Number: 37.10              Max Allowable Q(cfs): 999999.000
                DCIA(%): 0.00



------------------------------------------------------------------------------------------
         Name: CONFLUENCE               Node: CONFLUENCE             Status: Onsite
        Group: DOWN-STREAM-ANA          Type: SCS Unit Hydrograph CN

        Unit Hydrograph: Uh323                    Peaking Factor: 323.0
          Rainfall File:                     Storm Duration(hrs): 0.00
    Rainfall Amount(in): 0.000                 Time of Conc(min): 33.00
               Area(ac): 23.280                  Time Shift(hrs): 0.00
           Curve Number: 31.00              Max Allowable Q(cfs): 999999.000
                DCIA(%): 0.00



------------------------------------------------------------------------------------------
         Name: D-3                      Node: D-3                    Status: Onsite
        Group: DOWN-STREAM-ANA          Type: SCS Unit Hydrograph CN

        Unit Hydrograph: Uh323                    Peaking Factor: 323.0
          Rainfall File:                     Storm Duration(hrs): 0.00
    Rainfall Amount(in): 0.000                 Time of Conc(min): 32.00
               Area(ac): 92.770                  Time Shift(hrs): 0.00
           Curve Number: 47.90              Max Allowable Q(cfs): 999999.000
                DCIA(%): 0.00



------------------------------------------------------------------------------------------
         Name: E-EAST-NOW               Node: E-SWMF-REDUCED         Status: Onsite
        Group: DOWN-STREAM-ANA          Type: SCS Unit Hydrograph CN

        Unit Hydrograph: Uh323                    Peaking Factor: 323.0
          Rainfall File:                     Storm Duration(hrs): 0.00
    Rainfall Amount(in): 0.000                 Time of Conc(min): 5.00
               Area(ac): 2.140                   Time Shift(hrs): 0.00
           Curve Number: 93.90              Max Allowable Q(cfs): 999999.000
                DCIA(%): 0.00

Use East side in post-development condition

------------------------------------------------------------------------------------------
```

```
         Name: P-WEST-POST              Node: E-SWMF-REDUCED         Status: Onsite
        Group: DOWN-STREAM-ANA          Type: SCS Unit Hydrograph CN

        Unit Hydrograph: Uh323                   Peaking Factor: 323.0
          Rainfall File:                    Storm Duration(hrs): 0.00
    Rainfall Amount(in): 0.000                Time of Conc(min): 5.00
               Area(ac): 4.920                  Time Shift(hrs): 0.00
           Curve Number: 93.70             Max Allowable Q(cfs): 999999.000
                DCIA(%): 0.00


-------------------------------------------------------------------------------------------------
         Name: TRANS RD                 Node: TRANS RD               Status: Onsite
        Group: DOWN-STREAM-ANA          Type: SCS Unit Hydrograph CN

        Unit Hydrograph: Uh323                   Peaking Factor: 323.0
          Rainfall File:                    Storm Duration(hrs): 0.00
    Rainfall Amount(in): 0.000                Time of Conc(min): 44.00
               Area(ac): 67.110                 Time Shift(hrs): 0.00
           Curve Number: 33.80             Max Allowable Q(cfs): 999999.000
                DCIA(%): 0.00


=================================================================================================
==== Nodes ======================================================================================
=================================================================================================

      Name: B-2                 Base Flow(cfs): 0.000          Init Stage(ft): 120.000
     Group: DOWN-STREAM-ANA                                    Warn Stage(ft): 125.000
      Type: Stage/Area

Assumed node to have some storage, from depression near converge of contours
Estimate storage amount

      Stage(ft)        Area(ac)
--------------- ---------------
        120.000          0.2000
        122.000          1.0000

-------------------------------------------------------------------------------------------------
      Name: B-3                 Base Flow(cfs): 0.000          Init Stage(ft): 124.000
     Group: DOWN-STREAM-ANA                                    Warn Stage(ft): 130.000
      Type: Stage/Area


      Stage(ft)        Area(ac)
--------------- ---------------
        124.000          0.0001
        129.800          0.0002

-------------------------------------------------------------------------------------------------
      Name: BARINEAU-RD         Base Flow(cfs): 0.000          Init Stage(ft): 93.640
     Group: DOWN-STREAM-ANA                                    Warn Stage(ft): 102.000
      Type: Stage/Area

Assumed Barineau Rd node to have some minor storage, from depression
Estimate small storage amount
FEMA Base Flood Elevation (BFE) = 102

      Stage(ft)        Area(ac)
--------------- ---------------
         93.640          0.0100
         94.000          0.0150
         95.000          0.2500
         96.000          0.5000

-------------------------------------------------------------------------------------------------
      Name: BETHEL-CHURCH-      Base Flow(cfs): 0.000          Init Stage(ft): 142.000
     Group: DOWN-STREAM-ANA                                    Warn Stage(ft): 155.000
      Type: Stage/Area

EXISTING POND AT BETHEL CHURCH RD

      Stage(ft)        Area(ac)
--------------- ---------------
        142.000          3.2170
        144.000          3.6500
        146.000          4.2230
        148.000          4.9510
        150.000          5.7120
```

```
        152.000          6.4080
        154.000          7.3200

-------------------------------------------------------------------------------------
      Name: CONFLUENCE          Base Flow(cfs): 0.000          Init Stage(ft): 104.000
     Group: DOWN-STREAM-ANA                                    Warn Stage(ft): 107.500
      Type: Stage/Area

Assumed Confluence to have some minor storage

      Stage(ft)        Area(ac)
--------------- ---------------
        104.000          0.0010
        105.000          0.0020
        106.000          0.0030
        107.000          0.0050
        108.000          0.2000
        110.000          0.6000

-------------------------------------------------------------------------------------
      Name: D-3                 Base Flow(cfs): 0.000          Init Stage(ft): 115.000
     Group: DOWN-STREAM-ANA                                    Warn Stage(ft): 126.000
      Type: Stage/Area

Floodplain Depression 1

      Stage(ft)        Area(ac)
--------------- ---------------
        115.000          0.5050
        117.000          1.3070
        119.000          3.1890

-------------------------------------------------------------------------------------
      Name: E-SWMF-REDUCED      Base Flow(cfs): 0.000          Init Stage(ft): 125.800
     Group: DOWN-STREAM-ANA                                    Warn Stage(ft): 132.500
      Type: Stage/Area

Reduced Existing Pond With Regrading of Pond at 3:1 slope offset from proposed improvements

      Stage(ft)        Area(ac)
--------------- ---------------
        125.800          0.1150
        126.000          0.4050
        127.000          0.5260
        128.000          0.6130
        129.000          0.6990
        130.000          0.7880
        131.000          0.8790
        131.310          0.9010

-------------------------------------------------------------------------------------
      Name: POA-BARINEAU        Base Flow(cfs): 0.000          Init Stage(ft): 92.000
     Group: DOWN-STREAM-ANA                                    Warn Stage(ft): 95.000
      Type: Time/Stage


      Time(hrs)       Stage(ft)
--------------- ---------------
           0.00          92.000
       99999.00          92.000

-------------------------------------------------------------------------------------
      Name: RAILROAD-1          Base Flow(cfs): 0.000          Init Stage(ft): 115.000
     Group: DOWN-STREAM-ANA                                    Warn Stage(ft): 125.000
      Type: Stage/Area


      Stage(ft)        Area(ac)
--------------- ---------------
        115.000          0.0000
        129.800          0.0001

-------------------------------------------------------------------------------------
      Name: TRANS RD            Base Flow(cfs): 0.000          Init Stage(ft): 110.000
     Group: DOWN-STREAM-ANA                                    Warn Stage(ft): 112.000
      Type: Stage/Area

Assumed node to have some storage, from depression near dirt road crossing
Estimate storage amount

      Stage(ft)        Area(ac)
```

```
--------------- ---------------
        110.000          0.0900
        112.000          0.3300

==========================================================================================
==== Cross Sections ======================================================================
==========================================================================================

              Name: A-1                          Group: DOWN-STREAM-ANA
      Encroachment: No

Winding channel paths and ineffective slopes

    Station(ft)   Elevation(ft)     Manning's N
--------------- --------------- ---------------
        -91.190         102.000        0.045000
        -68.370         100.000        0.045000
        -37.150          98.000        0.045000
         -8.670          96.000        0.045000
          0.000          94.000        0.045000
          5.400          96.000        0.045000
         41.370          98.000        0.045000
         71.720         100.000        0.045000

-------------------------------------------------------------------
              Name: A-2                          Group: DOWN-STREAM-ANA
      Encroachment: No


    Station(ft)   Elevation(ft)     Manning's N
--------------- --------------- ---------------
       -131.080         110.000        0.035000
       -105.180         108.000        0.035000
        -70.620         106.000        0.035000
          0.000         104.000        0.035000
         57.950         106.000        0.035000
         81.130         108.000        0.035000
        111.500         110.000        0.035000

-------------------------------------------------------------------
              Name: B-0                          Group: DOWN-STREAM-ANA
      Encroachment: No


    Station(ft)   Elevation(ft)     Manning's N
--------------- --------------- ---------------
        -58.430         108.000        0.035000
          0.000         106.000        0.035000
         77.220         108.000        0.035000

-------------------------------------------------------------------
              Name: B-1                          Group: DOWN-STREAM-ANA
      Encroachment: No


    Station(ft)   Elevation(ft)     Manning's N
--------------- --------------- ---------------
       -171.540         112.000        0.035000
        -23.320         110.000        0.035000
         18.470         110.000        0.035000
        126.390         112.000        0.035000

-------------------------------------------------------------------
              Name: B-2                          Group: DOWN-STREAM-ANA
      Encroachment: No


    Station(ft)   Elevation(ft)     Manning's N
--------------- --------------- ---------------
        -18.010         126.000        0.035000
        -13.770         124.000        0.035000
        -10.120         122.000        0.035000
         -4.890         120.000        0.035000
          5.480         120.000        0.035000
         10.460         122.000        0.035000
         15.480         124.000        0.035000
         22.400         126.000        0.035000

-------------------------------------------------------------------
```

Name: B-3 Group: DOWN-STREAM-ANA
Encroachment: No

Station(ft)	Elevation(ft)	Manning's N
-234.890	128.000	0.035000
-186.500	126.000	0.035000
-111.730	124.000	0.035000
46.820	124.000	0.035000
113.870	124.000	0.035000
134.220	124.000	0.035000
177.520	126.000	0.035000
238.820	128.000	0.035000

Name: BETHEL-CHURCH-R Group: DOWN-STREAM-ANA
Encroachment: No

BETHEL CHURCH RD AS WEIR

Station(ft)	Elevation(ft)	Manning's N
-84.000	152.330	0.012000
-50.540	151.990	0.012000
0.000	151.310	0.012000
30.570	151.140	0.012000
72.470	150.940	0.012000

Name: C-1 Group: DOWN-STREAM-ANA
Encroachment: No

Station(ft)	Elevation(ft)	Manning's N
-149.430	114.000	0.035000
-59.040	112.000	0.035000
0.000	110.000	0.035000
64.880	112.000	0.035000
117.190	114.000	0.035000

Name: C-2 Group: DOWN-STREAM-ANA
Encroachment: No

Station(ft)	Elevation(ft)	Manning's N
-182.370	120.000	0.035000
-142.530	118.000	0.035000
-61.050	116.000	0.035000
0.000	115.000	0.035000
69.860	116.000	0.035000
114.690	118.000	0.035000
139.950	120.000	0.035000

Name: D-1 Group: DOWN-STREAM-ANA
Encroachment: No

Station(ft)	Elevation(ft)	Manning's N
-96.450	120.000	0.035000
-61.000	120.000	0.035000
0.000	118.000	0.035000
56.200	120.000	0.035000
96.490	122.000	0.035000

Name: D-2 Group: DOWN-STREAM-ANA
Encroachment: No

Station(ft)	Elevation(ft)	Manning's N
-101.030	124.000	0.035000

```
         70.410         122.000        0.035000
         76.980         122.000        0.035000
        151.890         124.000        0.035000

==========================================================================================
==== Pipes ===============================================================================
==========================================================================================

         Name: BETHEL-CHURCH-P     From Node: BETHEL-CHURCH-     Length(ft): 40.26
        Group: DOWN-STREAM-ANA       To Node: D-3                     Count: 1
                                                          Friction Equation: Automatic
               UPSTREAM       DOWNSTREAM                 Solution Algorithm: Most Restrictive
     Geometry: Circular       Circular                                Flow: Both
     Span(in): 24.00          24.00                      Entrance Loss Coef: 0.00
     Rise(in): 24.00          24.00                          Exit Loss Coef: 1.00
   Invert(ft): 148.500        148.200                        Bend Loss Coef: 0.00
  Manning's N: 0.120000       0.120000                     Outlet Ctrl Spec: Use dc or tw
 Top Clip(in): 0.000          0.000                         Inlet Ctrl Spec: Use dc
 Bot Clip(in): 0.000          0.000                       Stabilizer Option: None


Upstream FHWA Inlet Edge Description:
Circular CMP: Headwall

Downstream FHWA Inlet Edge Description:
Circular CMP: Headwall


-------------------------------------------------------------------------------------------------
         Name: POA                 From Node: BARINEAU-RD        Length(ft): 28.08
        Group: DOWN-STREAM-ANA       To Node: POA-BARINEAU            Count: 1
                                                          Friction Equation: Automatic
               UPSTREAM       DOWNSTREAM                 Solution Algorithm: Most Restrictive
     Geometry: Rectangular    Rectangular                             Flow: Both
     Span(in): 92.40          92.40                      Entrance Loss Coef: 0.00
     Rise(in): 48.00          48.00                          Exit Loss Coef: 1.00
   Invert(ft): 93.640         93.360                         Bend Loss Coef: 0.00
  Manning's N: 0.120000       0.120000                     Outlet Ctrl Spec: Use dc or tw
 Top Clip(in): 0.000          0.000                         Inlet Ctrl Spec: Use dc
 Bot Clip(in): 0.000          0.000                       Stabilizer Option: None


Upstream FHWA Inlet Edge Description:
Rectangular Box: 3/4" chamfers; 30° skewed headwall

Downstream FHWA Inlet Edge Description:
Rectangular Box: 0° wingwall flares


-------------------------------------------------------------------------------------------------
         Name: RAIL-ROAD-CROSS     From Node: D-3                Length(ft): 49.00
        Group: DOWN-STREAM-ANA       To Node: RAILROAD-1              Count: 1
                                                          Friction Equation: Automatic
               UPSTREAM       DOWNSTREAM                 Solution Algorithm: Automatic
     Geometry: Circular       Circular                                Flow: Positive
     Span(in): 42.00          42.00                      Entrance Loss Coef: 0.00
     Rise(in): 42.00          42.00                          Exit Loss Coef: 1.00
   Invert(ft): 115.880        115.800                        Bend Loss Coef: 0.00
  Manning's N: 0.120000       0.120000                     Outlet Ctrl Spec: Use dc or tw
 Top Clip(in): 0.000          0.000                         Inlet Ctrl Spec: Use dc
 Bot Clip(in): 0.000          0.000                       Stabilizer Option: None


Upstream FHWA Inlet Edge Description:
Circular Concrete: Square edge w/ headwall

Downstream FHWA Inlet Edge Description:
Circular Concrete: Groove end projecting


==========================================================================================
==== Channels ============================================================================
==========================================================================================

          Name: B-1 TO CONFLUEN     From Node: TRANS RD           Length(ft): 269.67
         Group: DOWN-STREAM-ANA       To Node: CONFLUENCE                Count: 1
```

```
                UPSTREAM       DOWNSTREAM                  Friction Equation: Automatic
      Geometry: Irregular      Irregular                 Solution Algorithm: Automatic
    Invert(ft): 110.000        106.000                               Flow: Positive
 TClpInitZ(ft): 9999.000       9999.000                    Contraction Coef: 0.100
   Manning's N:                                                Expansion Coef: 0.300
  Top Clip(ft):                                            Entrance Loss Coef: 0.000
  Bot Clip(ft):                                                Exit Loss Coef: 0.000
     Main XSec: B-1            B-0                          Outlet Ctrl Spec: Use dc or tw
  AuxElev1(ft): 0.000          0.000                         Inlet Ctrl Spec: Use dc
     Aux XSec1:                                             Stabilizer Option: None
  AuxElev2(ft): 0.000          0.000
     Aux XSec2:
 Top Width(ft):
     Depth(ft):
 Bot Width(ft):
  LtSdSlp(h/v):
  RtSdSlp(h/v):


-----------------------------------------------------------------------------------------------------
          Name: B-2 TO B-1          From Node: B-2                Length(ft): 1170.00
         Group: DOWN-STREAM-ANA       To Node: TRANS RD                 Count: 1

                UPSTREAM       DOWNSTREAM                  Friction Equation: Automatic
      Geometry: Irregular      Irregular                 Solution Algorithm: Automatic
    Invert(ft): 120.000        110.000                               Flow: Positive
 TClpInitZ(ft): 9999.000       9999.000                    Contraction Coef: 0.100
   Manning's N:                                                Expansion Coef: 0.300
  Top Clip(ft):                                            Entrance Loss Coef: 0.000
  Bot Clip(ft):                                                Exit Loss Coef: 0.000
     Main XSec: B-2            B-1                          Outlet Ctrl Spec: Use dc or tw
  AuxElev1(ft): 0.000          0.000                         Inlet Ctrl Spec: Use dc
     Aux XSec1:                                             Stabilizer Option: None
  AuxElev2(ft): 0.000          0.000
     Aux XSec2:
 Top Width(ft):
     Depth(ft):
 Bot Width(ft):
  LtSdSlp(h/v):
  RtSdSlp(h/v):


-----------------------------------------------------------------------------------------------------
          Name: B-3 TO B-2          From Node: B-3                Length(ft): 700.00
         Group: DOWN-STREAM-ANA       To Node: B-2                      Count: 1

                UPSTREAM       DOWNSTREAM                  Friction Equation: Automatic
      Geometry: Irregular      Irregular                 Solution Algorithm: Automatic
    Invert(ft): 124.000        120.000                               Flow: Both
 TClpInitZ(ft): 9999.000       9999.000                    Contraction Coef: 0.100
   Manning's N:                                                Expansion Coef: 0.300
  Top Clip(ft):                                            Entrance Loss Coef: 0.000
  Bot Clip(ft):                                                Exit Loss Coef: 0.000
     Main XSec: B-3            B-2                          Outlet Ctrl Spec: Use dc or tw
  AuxElev1(ft): 0.000          0.000                         Inlet Ctrl Spec: Use dc
     Aux XSec1:                                             Stabilizer Option: None
  AuxElev2(ft): 0.000          0.000
     Aux XSec2:
 Top Width(ft):
     Depth(ft):
 Bot Width(ft):
  LtSdSlp(h/v):
  RtSdSlp(h/v):

natural channel with stones and weeds

-----------------------------------------------------------------------------------------------------
          Name: CREEK-C             From Node: RAILROAD-1         Length(ft): 793.00
         Group: DOWN-STREAM-ANA       To Node: CONFLUENCE               Count: 1

                UPSTREAM       DOWNSTREAM                  Friction Equation: Automatic
      Geometry: Irregular      Irregular                 Solution Algorithm: Automatic
    Invert(ft): 115.000        110.000                               Flow: Positive
 TClpInitZ(ft): 9999.000       9999.000                    Contraction Coef: 0.100
   Manning's N:                                                Expansion Coef: 0.300
  Top Clip(ft):                                            Entrance Loss Coef: 0.000
  Bot Clip(ft):                                                Exit Loss Coef: 0.000
     Main XSec: C-2            C-1                          Outlet Ctrl Spec: Use dc or tw
  AuxElev1(ft): 0.000          0.000                         Inlet Ctrl Spec: Use dc
     Aux XSec1:                                             Stabilizer Option: None
  AuxElev2(ft): 0.000          0.000
```

```
     Aux XSec2:
 Top Width(ft):
     Depth(ft):
 Bot Width(ft):
  LtSdSlp(h/v):
  RtSdSlp(h/v):


-----------------------------------------------------------------------------------------------
          Name: WEST BRANCH         From Node: CONFLUENCE         Length(ft): 1696.00
         Group: DOWN-STREAM-ANA       To Node: BARINEAU-RD             Count: 1

                UPSTREAM       DOWNSTREAM                  Friction Equation: Automatic
      Geometry: Irregular      Irregular                  Solution Algorithm: Automatic
    Invert(ft): 104.000        94.000                                Flow: Positive
 TClpInitZ(ft): 9999.000       9999.000                     Contraction Coef: 0.100
   Manning's N:                                                 Expansion Coef: 0.300
  Top Clip(ft):                                             Entrance Loss Coef: 0.000
  Bot Clip(ft):                                                 Exit Loss Coef: 0.000
     Main XSec: A-2            A-1                           Outlet Ctrl Spec: Use dc or tw
  AuxElev1(ft): 0.000          0.000                          Inlet Ctrl Spec: Use dc
     Aux XSec1:                                              Stabilizer Option: None
  AuxElev2(ft): 0.000          0.000
     Aux XSec2:
 Top Width(ft):
     Depth(ft):
 Bot Width(ft):
  LtSdSlp(h/v):
  RtSdSlp(h/v):


=================================================================================
==== Drop Structures ============================================================
=================================================================================

         Name: P-DROP TO OUT       From Node: E-SWMF-REDUCED     Length(ft): 26.58
        Group: DOWN-STREAM-ANA       To Node: B-3                     Count: 1

               UPSTREAM       DOWNSTREAM                  Friction Equation: Automatic
     Geometry: Circular       Circular                   Solution Algorithm: Automatic
     Span(in): 12.00          12.00                                 Flow: Both
     Rise(in): 12.00          12.00                      Entrance Loss Coef: 0.000
   Invert(ft): 125.800        125.690                        Exit Loss Coef: 1.000
  Manning's N: 0.011000       0.011000                     Outlet Ctrl Spec: Use dc or tw
 Top Clip(in): 0.000          0.000                         Inlet Ctrl Spec: Use dc
 Bot Clip(in): 0.000          0.000                           Solution Incs: 10

Upstream FHWA Inlet Edge Description:
Circular: Smooth tapered inlet throat

Downstream FHWA Inlet Edge Description:
Circular: Smooth tapered inlet throat


*** Weir 1 of 3 for Drop Structure P-DROP TO OUT ***
                                                                                  TABLE
                  Count: 1                      Bottom Clip(in): 0.000
                   Type: Horizontal                Top Clip(in): 0.000
                   Flow: Both                    Weir Disc Coef: 3.200
               Geometry: Rectangular           Orifice Disc Coef: 0.670

               Span(in): 36.00                       Invert(ft): 131.310
               Rise(in): 54.00                  Control Elev(ft): 131.310

*** Weir 2 of 3 for Drop Structure P-DROP TO OUT ***
                                                                                  TABLE
                  Count: 1                      Bottom Clip(in): 0.000
                   Type: Vertical: Mavis           Top Clip(in): 0.000
                   Flow: Both                    Weir Disc Coef: 3.200
               Geometry: Circular              Orifice Disc Coef: 0.670

               Span(in): 4.00                        Invert(ft): 125.600
               Rise(in): 4.00                   Control Elev(ft): 125.600

*** Weir 3 of 3 for Drop Structure P-DROP TO OUT ***
                                                                                  TABLE
                  Count: 1                      Bottom Clip(in): 0.000
                   Type: Vertical: Mavis           Top Clip(in): 0.000
                   Flow: Both                    Weir Disc Coef: 3.200
               Geometry: Rectangular           Orifice Disc Coef: 0.600
```

```
               Span(in): 36.00                       Invert(ft): 129.000
               Rise(in): 22.60                  Control Elev(ft): 129.000


==========================================================================================
==== Weirs ===============================================================================
==========================================================================================

         Name: BARINEAU-RD-W       From Node: BARINEAU-RD
        Group: DOWN-STREAM-ANA       To Node: POA-BARINEAU
         Flow: Both                    Count: 1
         Type: Vertical: Paved      Geometry: Trapezoidal

            Bottom Width(ft): 100.00
        Left Side Slope(h/v): 0.01
       Right Side Slope(h/v): 0.00
                  Invert(ft): 101.830
       Control Elevation(ft): 101.830
      Struct Opening Dim(ft): 9999.00
                                             TABLE
             Bottom Clip(ft): 0.000
                Top Clip(ft): 0.000
         Weir Discharge Coef: 3.200
      Orifice Discharge Coef: 0.600



-------------------------------------------------------------------------------------------------
         Name: BETHEL CHURCH-W     From Node: BETHEL-CHURCH-
        Group: DOWN-STREAM-ANA       To Node: D-3
         Flow: Both                    Count: 1
         Type: Vertical: Paved      Geometry: Irregular

                           XSec: BETHEL-CHURCH-R
                  Invert(ft): 151.310
       Control Elevation(ft): 151.310
      Struct Opening Dim(ft): 9999.00
                                             TABLE
             Bottom Clip(ft): 0.000
                Top Clip(ft): 0.000
         Weir Discharge Coef: 3.200
      Orifice Discharge Coef: 0.600



-------------------------------------------------------------------------------------------------
         Name: P-WEIR              From Node: E-SWMF-REDUCED
        Group: DOWN-STREAM-ANA       To Node: B-3
         Flow: Both                    Count: 1
         Type: Vertical: Mavis      Geometry: Trapezoidal

            Bottom Width(ft): 10.00
        Left Side Slope(h/v): 5.00
       Right Side Slope(h/v): 5.00
                  Invert(ft): 129.820
       Control Elevation(ft): 129.820
      Struct Opening Dim(ft): 9999.00
                                             TABLE
             Bottom Clip(ft): 0.000
                Top Clip(ft): 0.000
         Weir Discharge Coef: 3.200
      Orifice Discharge Coef: 0.600

Existing Spillway Raised Approximately 2 feet

-------------------------------------------------------------------------------------------------
         Name: RAIL ROAD-W         From Node: D-3
        Group: DOWN-STREAM-ANA       To Node: RAILROAD-1
         Flow: Both                    Count: 1
         Type: Vertical: Fread      Geometry: Rectangular

                     Span(in): 1248.00
                     Rise(in): 30.00
                  Invert(ft): 126.650
       Control Elevation(ft): 126.650
                                             TABLE
             Bottom Clip(in): 0.000
                Top Clip(in): 0.000
         Weir Discharge Coef: 3.200
      Orifice Discharge Coef: 0.600
```

```
==========================================================================================
==== Hydrology Simulations ===============================================================
==========================================================================================

         Name: 100yr-1hr
     Filename: C:\Projects\100yr-1hr.R32

      Override Defaults: Yes
    Storm Duration(hrs): 1.00
          Rainfall File: Fdot-1
    Rainfall Amount(in): 4.40

Time(hrs)       Print Inc(min)
--------------- ---------------
2.000           2.00

-----------------------------------------------------------------------------------------------
         Name: 100yr-24hr
     Filename: C:\Projects\100yr-24hr.R32

      Override Defaults: Yes
    Storm Duration(hrs): 24.00
          Rainfall File: Fdot-24
    Rainfall Amount(in): 10.90

Time(hrs)       Print Inc(min)
--------------- ---------------
24.000          2.00

-----------------------------------------------------------------------------------------------
         Name: 100yr-2hr
     Filename: C:\Projects\100yr-2hr.R32

      Override Defaults: Yes
    Storm Duration(hrs): 2.00
          Rainfall File: Fdot-2
    Rainfall Amount(in): 5.80

Time(hrs)       Print Inc(min)
--------------- ---------------
2.000           2.00

-----------------------------------------------------------------------------------------------
         Name: 100yr-4hr
     Filename: C:\Projects\100yr-4hr.R32

      Override Defaults: Yes
    Storm Duration(hrs): 4.00
          Rainfall File: Fdot-4
    Rainfall Amount(in): 7.20

Time(hrs)       Print Inc(min)
--------------- ---------------
4.000           2.00

-----------------------------------------------------------------------------------------------
         Name: 100yr-8hr
     Filename: C:\Projects\100yr-8hr.R32

      Override Defaults: Yes
    Storm Duration(hrs): 8.00
          Rainfall File: Fdot-8
    Rainfall Amount(in): 8.90

Time(hrs)       Print Inc(min)
--------------- ---------------
8.000           2.00

-----------------------------------------------------------------------------------------------
         Name: 10yr-1hr
     Filename: C:\Projects\10yr-1hr.R32

      Override Defaults: Yes
    Storm Duration(hrs): 1.00
          Rainfall File: Fdot-1
    Rainfall Amount(in): 3.20

Time(hrs)       Print Inc(min)
--------------- ---------------
2.000           2.00

-----------------------------------------------------------------------------------------------
```

```
         Name: 10yr-24hr
     Filename: C:\Projects\10yr-24hr.R32

      Override Defaults: Yes
    Storm Duration(hrs): 24.00
          Rainfall File: Fdot-24
    Rainfall Amount(in): 7.50

Time(hrs)       Print Inc(min)
--------------- ---------------
24.000          2.00

-----------------------------------------------------------------------------------------------
         Name: 10yr-2hr
     Filename: C:\Projects\10yr-2hr.R32

      Override Defaults: Yes
    Storm Duration(hrs): 2.00
          Rainfall File: Fdot-2
    Rainfall Amount(in): 4.10

Time(hrs)       Print Inc(min)
--------------- ---------------
2.000           2.00

-----------------------------------------------------------------------------------------------
         Name: 10yr-4hr
     Filename: C:\Projects\10yr-4hr.R32

      Override Defaults: Yes
    Storm Duration(hrs): 4.00
          Rainfall File: Fdot-4
    Rainfall Amount(in): 5.00

Time(hrs)       Print Inc(min)
--------------- ---------------
4.000           2.00

-----------------------------------------------------------------------------------------------
         Name: 10yr-8hr
     Filename: C:\Projects\10yr-8hr.R32

      Override Defaults: Yes
    Storm Duration(hrs): 8.00
          Rainfall File: Fdot-8
    Rainfall Amount(in): 6.20

Time(hrs)       Print Inc(min)
--------------- ---------------
8.000           2.00

-----------------------------------------------------------------------------------------------
         Name: 25YR-1HR
     Filename: C:\Projects\25YR-1HR.R32

      Override Defaults: Yes
    Storm Duration(hrs): 1.00
          Rainfall File: Fdot-1
    Rainfall Amount(in): 3.70

Time(hrs)       Print Inc(min)
--------------- ---------------
2.000           2.00

-----------------------------------------------------------------------------------------------
         Name: 25YR-24HR
     Filename: C:\Projects\25YR-24HR.R32

      Override Defaults: Yes
    Storm Duration(hrs): 24.00
          Rainfall File: Fdot-24
    Rainfall Amount(in): 8.50

Time(hrs)       Print Inc(min)
--------------- ---------------
24.000          2.00

-----------------------------------------------------------------------------------------------
         Name: 25YR-2HR
     Filename: C:\Projects\25YR-2HR.R32

      Override Defaults: Yes
    Storm Duration(hrs): 2.00
```

```
          Rainfall File: Fdot-2
    Rainfall Amount(in): 4.70

Time(hrs)       Print Inc(min)
--------------- ---------------
2.000           2.00

-----------------------------------------------------------------------------------------------
         Name: 25YR-4HR
     Filename: C:\Projects\25YR-4HR.R32

      Override Defaults: Yes
    Storm Duration(hrs): 4.00
          Rainfall File: Fdot-4
    Rainfall Amount(in): 5.90

Time(hrs)       Print Inc(min)
--------------- ---------------
4.000           2.00

-----------------------------------------------------------------------------------------------
         Name: 25YR-8HR
     Filename: C:\Projects\25YR-8HR.R32

      Override Defaults: Yes
    Storm Duration(hrs): 8.00
          Rainfall File: Fdot-8
    Rainfall Amount(in): 7.40

Time(hrs)       Print Inc(min)
--------------- ---------------
8.000           2.00

-----------------------------------------------------------------------------------------------
         Name: 2yr-1hr
     Filename: C:\Projects\2yr-1hr.R32

      Override Defaults: Yes
    Storm Duration(hrs): 1.00
          Rainfall File: Fdot-1
    Rainfall Amount(in): 2.30

Time(hrs)       Print Inc(min)
--------------- ---------------
2.000           2.00

-----------------------------------------------------------------------------------------------
         Name: 2yr-24hr
     Filename: C:\Projects\2yr-24hr.R32

      Override Defaults: Yes
    Storm Duration(hrs): 24.00
          Rainfall File: Fdot-24
    Rainfall Amount(in): 4.70

Time(hrs)       Print Inc(min)
--------------- ---------------
24.000          2.00

-----------------------------------------------------------------------------------------------
         Name: 2yr-2hr
     Filename: C:\Projects\2yr-2hr.R32

      Override Defaults: Yes
    Storm Duration(hrs): 2.00
          Rainfall File: Fdot-2
    Rainfall Amount(in): 3.00

Time(hrs)       Print Inc(min)
--------------- ---------------
2.000           2.00

-----------------------------------------------------------------------------------------------
         Name: 2yr-4hr
     Filename: C:\Projects\2yr-4hr.R32

      Override Defaults: Yes
    Storm Duration(hrs): 4.00
          Rainfall File: Fdot-4
    Rainfall Amount(in): 3.50

Time(hrs)       Print Inc(min)
--------------- ---------------
```

```
4.000           2.00

-----------------------------------------------------------------------------------------------
         Name: 2yr-8hr
     Filename: C:\Projects\2yr-8hr.R32

      Override Defaults: Yes
    Storm Duration(hrs): 8.00
          Rainfall File: Fdot-8
    Rainfall Amount(in): 4.20

Time(hrs)       Print Inc(min)
--------------- ---------------
8.000           2.00

-----------------------------------------------------------------------------------------------
         Name: 50yr-1hr
     Filename: C:\Projects\50yr-1hr.R32

      Override Defaults: Yes
    Storm Duration(hrs): 1.00
          Rainfall File: Fdot-1
    Rainfall Amount(in): 4.00

Time(hrs)       Print Inc(min)
--------------- ---------------
2.000           2.00

-----------------------------------------------------------------------------------------------
         Name: 50yr-24hr
     Filename: C:\Projects\50yr-24hr.R32

      Override Defaults: Yes
    Storm Duration(hrs): 24.00
          Rainfall File: Fdot-24
    Rainfall Amount(in): 9.60

Time(hrs)       Print Inc(min)
--------------- ---------------
24.000          2.00

-----------------------------------------------------------------------------------------------
         Name: 50yr-2hr
     Filename: C:\Projects\50yr-2hr.R32

      Override Defaults: Yes
    Storm Duration(hrs): 2.00
          Rainfall File: Fdot-2
    Rainfall Amount(in): 5.20

Time(hrs)       Print Inc(min)
--------------- ---------------
2.000           2.00

-----------------------------------------------------------------------------------------------
         Name: 50yr-4hr
     Filename: C:\Projects\50yr-4hr.R32

      Override Defaults: Yes
    Storm Duration(hrs): 4.00
          Rainfall File: Fdot-4
    Rainfall Amount(in): 6.40

Time(hrs)       Print Inc(min)
--------------- ---------------
4.000           2.00

-----------------------------------------------------------------------------------------------
         Name: 50yr-8hr
     Filename: C:\Projects\50yr-8hr.R32

      Override Defaults: Yes
    Storm Duration(hrs): 8.00
          Rainfall File: Fdot-8
    Rainfall Amount(in): 8.00

Time(hrs)       Print Inc(min)
--------------- ---------------
8.000           2.00

-----------------------------------------------------------------------------------------------
         Name: 5yr-1hr
     Filename: C:\Projects\5yr-1hr.R32
```

```
      Override Defaults: Yes
    Storm Duration(hrs): 1.00
          Rainfall File: Fdot-1
    Rainfall Amount(in): 2.80

Time(hrs)       Print Inc(min)
--------------- ---------------
2.000           2.00

-----------------------------------------------------------------------------------------------
         Name: 5yr-24hr
     Filename: C:\Projects\5yr-24hr.R32

      Override Defaults: Yes
    Storm Duration(hrs): 24.00
          Rainfall File: Fdot-24
    Rainfall Amount(in): 6.40

Time(hrs)       Print Inc(min)
--------------- ---------------
24.000          2.00

-----------------------------------------------------------------------------------------------
         Name: 5yr-2hr
     Filename: C:\Projects\5yr-2hr.R32

      Override Defaults: Yes
    Storm Duration(hrs): 2.00
          Rainfall File: Fdot-2
    Rainfall Amount(in): 3.60

Time(hrs)       Print Inc(min)
--------------- ---------------
2.000           2.00

-----------------------------------------------------------------------------------------------
         Name: 5yr-4hr
     Filename: C:\Projects\5yr-4hr.R32

      Override Defaults: Yes
    Storm Duration(hrs): 4.00
          Rainfall File: Fdot-4
    Rainfall Amount(in): 4.40

Time(hrs)       Print Inc(min)
--------------- ---------------
4.000           2.00

-----------------------------------------------------------------------------------------------
         Name: 5yr-8hr
     Filename: C:\Projects\5yr-8hr.R32

      Override Defaults: Yes
    Storm Duration(hrs): 8.00
          Rainfall File: Fdot-8
    Rainfall Amount(in): 5.50

Time(hrs)       Print Inc(min)
--------------- ---------------
8.000           2.00

=================================================================================
==== Routing Simulations ========================================================
=================================================================================

         Name: 100yr-1hr           Hydrology Sim: 100yr-1hr
     Filename: C:\Projects\100yr-1hr.I32

      Execute: Yes         Restart: No            Patch: No
  Alternative: No

        Max Delta Z(ft): 1.00                     Delta Z Factor: 0.00500
    Time Step Optimizer: 10.000
        Start Time(hrs): 0.000                     End Time(hrs): 2.00
     Min Calc Time(sec): 0.5000               Max Calc Time(sec): 60.0000
        Boundary Stages:                          Boundary Flows:


Time(hrs)       Print Inc(min)
--------------- ---------------
2.000           2.000
```

```
Group           Run
--------------- -----
DOWN-STREAM-ANA Yes


-----------------------------------------------------------------------------------------------
         Name: 100yr-24hr          Hydrology Sim: 100yr-24hr
     Filename: C:\Projects\100yr-24hr.I32

      Execute: Yes         Restart: No            Patch: No
  Alternative: No

        Max Delta Z(ft): 1.00                     Delta Z Factor: 0.00500
    Time Step Optimizer: 10.000
        Start Time(hrs): 0.000                     End Time(hrs): 24.00
     Min Calc Time(sec): 0.5000               Max Calc Time(sec): 60.0000
        Boundary Stages:                          Boundary Flows:


Time(hrs)       Print Inc(min)
--------------- ---------------
24.000          2.000

Group           Run
--------------- -----
DOWN-STREAM-ANA Yes


-----------------------------------------------------------------------------------------------
         Name: 100yr-2hr           Hydrology Sim: 100yr-2hr
     Filename: C:\Projects\100yr-2hr.I32

      Execute: Yes         Restart: No            Patch: No
  Alternative: No

        Max Delta Z(ft): 1.00                     Delta Z Factor: 0.00500
    Time Step Optimizer: 10.000
        Start Time(hrs): 0.000                     End Time(hrs): 2.00
     Min Calc Time(sec): 0.5000               Max Calc Time(sec): 60.0000
        Boundary Stages:                          Boundary Flows:


Time(hrs)       Print Inc(min)
--------------- ---------------
2.000           2.000

Group           Run
--------------- -----
DOWN-STREAM-ANA Yes


-----------------------------------------------------------------------------------------------
         Name: 100yr-4hr           Hydrology Sim: 100yr-4hr
     Filename: C:\Projects\100yr-4hr.I32

      Execute: Yes         Restart: No            Patch: No
  Alternative: No

        Max Delta Z(ft): 1.00                     Delta Z Factor: 0.00500
    Time Step Optimizer: 10.000
        Start Time(hrs): 0.000                     End Time(hrs): 4.00
     Min Calc Time(sec): 0.5000               Max Calc Time(sec): 60.0000
        Boundary Stages:                          Boundary Flows:


Time(hrs)       Print Inc(min)
--------------- ---------------
4.000           2.000

Group           Run
--------------- -----
DOWN-STREAM-ANA Yes


-----------------------------------------------------------------------------------------------
         Name: 100yr-8hr           Hydrology Sim: 100yr-8hr
     Filename: C:\Projects\100yr-8hr.I32

      Execute: Yes         Restart: No            Patch: No
```

```
  Alternative: No

        Max Delta Z(ft): 1.00                     Delta Z Factor: 0.00500
    Time Step Optimizer: 10.000
        Start Time(hrs): 0.000                     End Time(hrs): 8.00
     Min Calc Time(sec): 0.5000               Max Calc Time(sec): 60.0000
        Boundary Stages:                          Boundary Flows:


Time(hrs)       Print Inc(min)
--------------- ---------------
8.000           2.000

Group           Run
--------------- -----
DOWN-STREAM-ANA Yes


-----------------------------------------------------------------------------------------------
         Name: 10yr-1hr            Hydrology Sim: 10YR-1HR
     Filename: C:\Projects\10yr-1hr.I32

      Execute: Yes         Restart: No            Patch: No
  Alternative: No

        Max Delta Z(ft): 1.00                     Delta Z Factor: 0.00500
    Time Step Optimizer: 10.000
        Start Time(hrs): 0.000                     End Time(hrs): 2.00
     Min Calc Time(sec): 0.5000               Max Calc Time(sec): 60.0000
        Boundary Stages:                          Boundary Flows:


Time(hrs)       Print Inc(min)
--------------- ---------------
2.000           2.000

Group           Run
--------------- -----
DOWN-STREAM-ANA Yes


-----------------------------------------------------------------------------------------------
         Name: 10yr-24hr           Hydrology Sim: 10YR-24HR
     Filename: C:\Projects\10yr-24hr.I32

      Execute: Yes         Restart: No            Patch: No
  Alternative: No

        Max Delta Z(ft): 1.00                     Delta Z Factor: 0.00500
    Time Step Optimizer: 10.000
        Start Time(hrs): 0.000                     End Time(hrs): 24.00
     Min Calc Time(sec): 0.5000               Max Calc Time(sec): 60.0000
        Boundary Stages:                          Boundary Flows:


Time(hrs)       Print Inc(min)
--------------- ---------------
24.000          2.000

Group           Run
--------------- -----
DOWN-STREAM-ANA Yes


-----------------------------------------------------------------------------------------------
         Name: 10yr-2hr            Hydrology Sim: 10YR-2HR
     Filename: C:\Projects\10yr-2hr.I32

      Execute: Yes         Restart: No            Patch: No
  Alternative: No

        Max Delta Z(ft): 1.00                     Delta Z Factor: 0.00500
    Time Step Optimizer: 10.000
        Start Time(hrs): 0.000                     End Time(hrs): 2.00
     Min Calc Time(sec): 0.5000               Max Calc Time(sec): 60.0000
        Boundary Stages:                          Boundary Flows:


Time(hrs)       Print Inc(min)
```

```
--------------- ---------------
2.000           2.000

Group           Run
--------------- -----
DOWN-STREAM-ANA Yes


-------------------------------------------------------------------------------------------------
         Name: 10yr-4hr            Hydrology Sim: 10YR-4HR
     Filename: C:\Projects\10yr-4hr.I32

      Execute: Yes         Restart: No            Patch: No
  Alternative: No

        Max Delta Z(ft): 1.00                     Delta Z Factor: 0.00500
    Time Step Optimizer: 10.000
        Start Time(hrs): 0.000                     End Time(hrs): 4.00
     Min Calc Time(sec): 0.5000               Max Calc Time(sec): 60.0000
        Boundary Stages:                          Boundary Flows:



Time(hrs)       Print Inc(min)
--------------- ---------------
4.000           2.000

Group           Run
--------------- -----
DOWN-STREAM-ANA Yes


-------------------------------------------------------------------------------------------------
         Name: 10yr-8hr            Hydrology Sim: 10YR-8HR
     Filename: C:\Projects\10yr-8hr.I32

      Execute: Yes         Restart: No            Patch: No
  Alternative: No

        Max Delta Z(ft): 1.00                     Delta Z Factor: 0.00500
    Time Step Optimizer: 10.000
        Start Time(hrs): 0.000                     End Time(hrs): 8.00
     Min Calc Time(sec): 0.5000               Max Calc Time(sec): 60.0000
        Boundary Stages:                          Boundary Flows:



Time(hrs)       Print Inc(min)
--------------- ---------------
8.000           2.000

Group           Run
--------------- -----
DOWN-STREAM-ANA Yes


-------------------------------------------------------------------------------------------------
         Name: 25yr-1hr            Hydrology Sim: 25YR-1HR
     Filename: C:\Projects\25yr-1hr.I32

      Execute: Yes         Restart: No            Patch: No
  Alternative: No

        Max Delta Z(ft): 1.00                     Delta Z Factor: 0.00500
    Time Step Optimizer: 10.000
        Start Time(hrs): 0.000                     End Time(hrs): 2.00
     Min Calc Time(sec): 0.5000               Max Calc Time(sec): 60.0000
        Boundary Stages:                          Boundary Flows:



Time(hrs)       Print Inc(min)
--------------- ---------------
2.000           2.000

Group           Run
--------------- -----
DOWN-STREAM-ANA Yes


-------------------------------------------------------------------------------------------------
         Name: 25yr-24hr           Hydrology Sim: 25YR-24HR
     Filename: C:\Projects\25yr-24hr.I32
```

```
      Execute: Yes         Restart: No            Patch: No
  Alternative: No

        Max Delta Z(ft): 1.00                     Delta Z Factor: 0.00500
    Time Step Optimizer: 10.000
        Start Time(hrs): 0.000                     End Time(hrs): 24.00
     Min Calc Time(sec): 0.5000               Max Calc Time(sec): 60.0000
        Boundary Stages:                          Boundary Flows:


Time(hrs)       Print Inc(min)
--------------- ---------------
24.000          2.000

Group           Run
--------------- -----
DOWN-STREAM-ANA Yes


-----------------------------------------------------------------------------------------------
         Name: 25yr-2hr            Hydrology Sim: 25YR-2HR
     Filename: C:\Projects\25yr-2hr.I32

      Execute: Yes         Restart: No            Patch: No
  Alternative: No

        Max Delta Z(ft): 1.00                     Delta Z Factor: 0.00500
    Time Step Optimizer: 10.000
        Start Time(hrs): 0.000                     End Time(hrs): 2.00
     Min Calc Time(sec): 0.5000               Max Calc Time(sec): 60.0000
        Boundary Stages:                          Boundary Flows:


Time(hrs)       Print Inc(min)
--------------- ---------------
2.000           2.000

Group           Run
--------------- -----
DOWN-STREAM-ANA Yes


-----------------------------------------------------------------------------------------------
         Name: 25yr-4hr            Hydrology Sim: 25YR-4HR
     Filename: C:\Projects\25yr-4hr.I32

      Execute: Yes         Restart: No            Patch: No
  Alternative: No

        Max Delta Z(ft): 1.00                     Delta Z Factor: 0.00500
    Time Step Optimizer: 10.000
        Start Time(hrs): 0.000                     End Time(hrs): 4.00
     Min Calc Time(sec): 0.5000               Max Calc Time(sec): 60.0000
        Boundary Stages:                          Boundary Flows:


Time(hrs)       Print Inc(min)
--------------- ---------------
4.000           2.000

Group           Run
--------------- -----
DOWN-STREAM-ANA Yes


-----------------------------------------------------------------------------------------------
         Name: 25yr-8hr            Hydrology Sim: 25YR-8HR
     Filename: C:\Projects\25yr-8hr.I32

      Execute: Yes         Restart: No            Patch: No
  Alternative: No

        Max Delta Z(ft): 1.00                     Delta Z Factor: 0.00500
    Time Step Optimizer: 10.000
        Start Time(hrs): 0.000                     End Time(hrs): 8.00
     Min Calc Time(sec): 0.5000               Max Calc Time(sec): 60.0000
        Boundary Stages:                          Boundary Flows:
```

```
Time(hrs)       Print Inc(min)
--------------- ---------------
8.000           2.000

Group           Run
--------------- -----
DOWN-STREAM-ANA Yes


-----------------------------------------------------------------------------------------------
         Name: 2yr-1hr             Hydrology Sim: 2YR-1HR
     Filename: C:\Projects\2yr-1hr.I32

      Execute: Yes         Restart: No            Patch: No
  Alternative: No

        Max Delta Z(ft): 1.00                     Delta Z Factor: 0.00500
    Time Step Optimizer: 10.000
        Start Time(hrs): 0.000                     End Time(hrs): 2.00
     Min Calc Time(sec): 0.5000               Max Calc Time(sec): 60.0000
        Boundary Stages:                          Boundary Flows:


Time(hrs)       Print Inc(min)
--------------- ---------------
2.000           2.000

Group           Run
--------------- -----
DOWN-STREAM-ANA Yes


-----------------------------------------------------------------------------------------------
         Name: 2yr-24hr            Hydrology Sim: 2YR-24HR
     Filename: C:\Projects\2yr-24hr.I32

      Execute: Yes         Restart: No            Patch: No
  Alternative: No

        Max Delta Z(ft): 1.00                     Delta Z Factor: 0.00500
    Time Step Optimizer: 10.000
        Start Time(hrs): 0.000                     End Time(hrs): 24.00
     Min Calc Time(sec): 0.5000               Max Calc Time(sec): 60.0000
        Boundary Stages:                          Boundary Flows:


Time(hrs)       Print Inc(min)
--------------- ---------------
24.000          2.000

Group           Run
--------------- -----
DOWN-STREAM-ANA Yes


-----------------------------------------------------------------------------------------------
         Name: 2yr-2hr             Hydrology Sim: 2YR-2HR
     Filename: C:\Projects\2yr-2hr.I32

      Execute: Yes         Restart: No            Patch: No
  Alternative: No

        Max Delta Z(ft): 1.00                     Delta Z Factor: 0.00500
    Time Step Optimizer: 10.000
        Start Time(hrs): 0.000                     End Time(hrs): 2.00
     Min Calc Time(sec): 0.5000               Max Calc Time(sec): 60.0000
        Boundary Stages:                          Boundary Flows:


Time(hrs)       Print Inc(min)
--------------- ---------------
2.000           2.000

Group           Run
--------------- -----
DOWN-STREAM-ANA Yes


-----------------------------------------------------------------------------------------------
```

```
         Name: 2yr-4hr             Hydrology Sim: 2YR-4HR
     Filename: C:\Projects\2yr-4hr.I32

      Execute: Yes         Restart: No            Patch: No
  Alternative: No

        Max Delta Z(ft): 1.00                     Delta Z Factor: 0.00500
    Time Step Optimizer: 10.000
        Start Time(hrs): 0.000                     End Time(hrs): 4.00
     Min Calc Time(sec): 0.5000               Max Calc Time(sec): 60.0000
        Boundary Stages:                          Boundary Flows:


Time(hrs)       Print Inc(min)
--------------- ---------------
4.000           2.000

Group           Run
--------------- -----
DOWN-STREAM-ANA Yes


-----------------------------------------------------------------------------------------------
         Name: 2yr-8hr             Hydrology Sim: 2YR-8HR
     Filename: C:\Projects\2yr-8hr.I32

      Execute: Yes         Restart: No            Patch: No
  Alternative: No

        Max Delta Z(ft): 1.00                     Delta Z Factor: 0.00500
    Time Step Optimizer: 10.000
        Start Time(hrs): 0.000                     End Time(hrs): 8.00
     Min Calc Time(sec): 0.5000               Max Calc Time(sec): 60.0000
        Boundary Stages:                          Boundary Flows:


Time(hrs)       Print Inc(min)
--------------- ---------------
8.000           2.000

Group           Run
--------------- -----
DOWN-STREAM-ANA Yes


-----------------------------------------------------------------------------------------------
         Name: 50yr-1hr            Hydrology Sim: 50YR-1HR
     Filename: C:\Projects\50yr-1hr.I32

      Execute: Yes         Restart: No            Patch: No
  Alternative: No

        Max Delta Z(ft): 1.00                     Delta Z Factor: 0.00500
    Time Step Optimizer: 10.000
        Start Time(hrs): 0.000                     End Time(hrs): 2.00
     Min Calc Time(sec): 0.5000               Max Calc Time(sec): 60.0000
        Boundary Stages:                          Boundary Flows:


Time(hrs)       Print Inc(min)
--------------- ---------------
2.000           2.000

Group           Run
--------------- -----
DOWN-STREAM-ANA Yes


-----------------------------------------------------------------------------------------------
         Name: 50yr-24hr           Hydrology Sim: 50YR-24HR
     Filename: C:\Projects\50yr-24hr.I32

      Execute: Yes         Restart: No            Patch: No
  Alternative: No

        Max Delta Z(ft): 1.00                     Delta Z Factor: 0.00500
    Time Step Optimizer: 10.000
        Start Time(hrs): 0.000                     End Time(hrs): 24.00
     Min Calc Time(sec): 0.5000               Max Calc Time(sec): 60.0000
        Boundary Stages:                          Boundary Flows:
```

```
Time(hrs)       Print Inc(min)
--------------- ---------------
24.000          2.000

Group           Run
--------------- -----
DOWN-STREAM-ANA Yes


-----------------------------------------------------------------------------------------------
         Name: 50yr-2hr            Hydrology Sim: 50YR-2HR
     Filename: C:\Projects\50yr-2hr.I32

      Execute: Yes         Restart: No            Patch: No
  Alternative: No

        Max Delta Z(ft): 1.00                     Delta Z Factor: 0.00500
    Time Step Optimizer: 10.000
        Start Time(hrs): 0.000                     End Time(hrs): 2.00
     Min Calc Time(sec): 0.5000               Max Calc Time(sec): 60.0000
        Boundary Stages:                          Boundary Flows:



Time(hrs)       Print Inc(min)
--------------- ---------------
2.000           2.000

Group           Run
--------------- -----
DOWN-STREAM-ANA Yes


-----------------------------------------------------------------------------------------------
         Name: 50yr-4hr            Hydrology Sim: 50YR-4HR
     Filename: C:\Projects\50yr-4hr.I32

      Execute: Yes         Restart: No            Patch: No
  Alternative: No

        Max Delta Z(ft): 1.00                     Delta Z Factor: 0.00500
    Time Step Optimizer: 10.000
        Start Time(hrs): 0.000                     End Time(hrs): 4.00
     Min Calc Time(sec): 0.5000               Max Calc Time(sec): 60.0000
        Boundary Stages:                          Boundary Flows:



Time(hrs)       Print Inc(min)
--------------- ---------------
4.000           2.000

Group           Run
--------------- -----
DOWN-STREAM-ANA Yes


-----------------------------------------------------------------------------------------------
         Name: 50yr-8hr            Hydrology Sim: 50YR-8HR
     Filename: C:\Projects\50yr-8hr.I32

      Execute: Yes         Restart: No            Patch: No
  Alternative: No

        Max Delta Z(ft): 1.00                     Delta Z Factor: 0.00500
    Time Step Optimizer: 10.000
        Start Time(hrs): 0.000                     End Time(hrs): 8.00
     Min Calc Time(sec): 0.5000               Max Calc Time(sec): 60.0000
        Boundary Stages:                          Boundary Flows:



Time(hrs)       Print Inc(min)
--------------- ---------------
8.000           2.000

Group           Run
--------------- -----
DOWN-STREAM-ANA Yes
```

```
-----------------------------------------------------------------------------------------------
         Name: 5yr-1hr             Hydrology Sim: 5YR-1HR
     Filename: C:\Projects\5yr-1hr.I32

      Execute: Yes         Restart: No            Patch: No
  Alternative: No

        Max Delta Z(ft): 1.00                     Delta Z Factor: 0.00500
    Time Step Optimizer: 10.000
        Start Time(hrs): 0.000                     End Time(hrs): 2.00
     Min Calc Time(sec): 0.5000               Max Calc Time(sec): 60.0000
        Boundary Stages:                          Boundary Flows:


Time(hrs)       Print Inc(min)
--------------- ---------------
2.000           2.000

Group           Run
--------------- -----
DOWN-STREAM-ANA Yes


-----------------------------------------------------------------------------------------------
         Name: 5yr-24hr            Hydrology Sim: 5YR-24HR
     Filename: C:\Projects\5yr-24hr.I32

      Execute: Yes         Restart: No            Patch: No
  Alternative: No

        Max Delta Z(ft): 1.00                     Delta Z Factor: 0.00500
    Time Step Optimizer: 10.000
        Start Time(hrs): 0.000                     End Time(hrs): 24.00
     Min Calc Time(sec): 0.5000               Max Calc Time(sec): 60.0000
        Boundary Stages:                          Boundary Flows:


Time(hrs)       Print Inc(min)
--------------- ---------------
24.000          2.000

Group           Run
--------------- -----
DOWN-STREAM-ANA Yes


-----------------------------------------------------------------------------------------------
         Name: 5yr-2hr             Hydrology Sim: 5YR-2HR
     Filename: C:\Projects\5yr-2hr.I32

      Execute: Yes         Restart: No            Patch: No
  Alternative: No

        Max Delta Z(ft): 1.00                     Delta Z Factor: 0.00500
    Time Step Optimizer: 10.000
        Start Time(hrs): 0.000                     End Time(hrs): 2.00
     Min Calc Time(sec): 0.5000               Max Calc Time(sec): 60.0000
        Boundary Stages:                          Boundary Flows:


Time(hrs)       Print Inc(min)
--------------- ---------------
2.000           2.000

Group           Run
--------------- -----
DOWN-STREAM-ANA Yes


-----------------------------------------------------------------------------------------------
         Name: 5yr-4hr             Hydrology Sim: 5YR-4HR
     Filename: C:\Projects\5yr-4hr.I32

      Execute: Yes         Restart: No            Patch: No
  Alternative: No

        Max Delta Z(ft): 1.00                     Delta Z Factor: 0.00500
    Time Step Optimizer: 10.000
        Start Time(hrs): 0.000                     End Time(hrs): 4.00
```

```
     Min Calc Time(sec): 0.5000               Max Calc Time(sec): 60.0000
        Boundary Stages:                          Boundary Flows:


Time(hrs)       Print Inc(min)
--------------- ---------------
4.000           2.000

Group           Run
--------------- -----
DOWN-STREAM-ANA Yes


-------------------------------------------------------------------------------------------------
         Name: 5yr-8hr             Hydrology Sim: 5YR-8HR
     Filename: C:\Projects\5yr-8hr.I32

      Execute: Yes         Restart: No            Patch: No
  Alternative: No

        Max Delta Z(ft): 1.00                     Delta Z Factor: 0.00500
    Time Step Optimizer: 10.000
        Start Time(hrs): 0.000                     End Time(hrs): 8.00
     Min Calc Time(sec): 0.5000               Max Calc Time(sec): 60.0000
        Boundary Stages:                          Boundary Flows:


Time(hrs)       Print Inc(min)
--------------- ---------------
8.000           2.000

Group           Run
--------------- -----
DOWN-STREAM-ANA Yes


==========================================================================================
==== Boundary Conditions ================================================================
==========================================================================================

      Name:                       Node: E-South               Type: Stage

      Time(hrs)       Stage(ft)
--------------- ---------------
          0.000          85.000
        900.000          85.000
```

5. ICPR Model Results Summary

MooreBass CONSULTING

Project Name:	HOPKINS ELECTRIC PLANT	Prepared By:	JMoore	Date:	3/28/2017
		Revised By:		Rev.:	
Project No.:	R83.001	Checked By:		Date:	

ICPR RESULTS SUMMARY

ONSITE Pre - Post Development Comparison

ON-SITE POND				
EXISTING			PROPOSED	
TOP OF BERM =	131.00		TOP OF BERM =	131.31
TOP OF BAFFLE =	128.58		TOP OF BAFFLE =	129.00
SPILLWAY =	127.73		SPILLWAY =	129.82

BARINEAU ROAD BOX CULVERT			
LOW IN ROAD AT CENTERLINE =			101.83
BOX CULVERT WIDTH =	7.7'	BOX CULVERT HEIGHT =	4'
CROWN OF BOX CULVERT =			97.64
INVERT OF BOX CULVERT =			93.64

Storm Simulation	West - Present Max. Flow (cfs)	East-Pre-dev Max. Flow (cfs)	**Allowable Discharge Max. Flow (cfs)**	P-SWMF Total Post Max. Flow (cfs)	P-SWMF Max. Stage (feet)	Freeboard (feet)	Pre vs. Post Difference (cfs)	Is Total Post <= Total Pre?	BARINEAU RD E-Max. Stage (feet)	BARINEAU RD P-Max. Stage (feet)
2yr-1hr	15.16	0	15.16	0.58	127.77	3.54	14.580	Yes	94.38	93.76
2yr-24hr	2.02	0.09	2.02	0.72	128.68	2.63	1.300	Yes	94.32	94.33
2yr-2hr	14.1	0.05	14.1	0.67	128.31	3.00	13.430	Yes	94.43	93.76
2yr-4hr	7.21	0.13	7.27	0.72	128.66	2.65	6.550	Yes	94.41	93.86
2yr-8hr	7.74	0.18	7.76	0.77	129	2.31	6.990	Yes	94.44	94.18
5yr-1hr	20.04	0.03	20.02	0.65	128.22	3.09	19.370	Yes	94.52	93.78
5yr-24hr	2.9	0.22	3.03	1.8	129.23	2.08	1.230	Yes	95.05	95.07
5yr-2hr	17.93	0.17	17.89	0.74	128.81	2.50	17.150	Yes	94.57	93.78
5yr-4hr	9.66	0.41	9.66	2.09	129.27	2.04	7.570	Yes	94.57	94.26
5yr-8hr	10.58	0.48	10.88	3.73	129.46	1.85	7.150	Yes	94.98	95.04
10yr-1hr	24	0.13	24	0.71	128.56	2.75	23.290	Yes	94.64	93.8
10yr-24hr	3.47	0.33	3.74	2.86	129.37	1.94	0.880	Yes	95.49	95.52
10yr-2hr	21.13	0.31	21.14	1.5	129.18	2.13	19.640	Yes	94.69	93.82
10yr-4hr	11.29	0.64	11.3	4.29	129.52	1.79	7.010	Yes	94.9	94.8
10yr-8hr	12.1	0.71	12.64	5.62	129.65	1.66	7.020	Yes	95.41	95.48
25yr-1hr	28.96	0.35	28.94	0.77	128.98	2.33	28.170	Yes	94.77	93.88
25yr-24hr	3.99	0.43	4.46	3.55	129.44	1.87	0.910	Yes	95.87	95.89
25yr-2hr	24.96	0.52	25	3.77	129.47	1.84	21.230	Yes	94.81	94.19
25yr-4hr	13.74	1.04	13.84	7.93	129.85	1.46	5.910	Yes	95.68	95.7
25yr-8hr	14.68	1.26	15.74	8.44	129.88	1.43	7.300	Yes	96.34	96.4
50yr-1hr	31.94	0.52	31.93	1.61	129.2	2.11	30.320	Yes	94.85	94.07
50yr-24hr	4.55	0.58	5.16	4.52	129.54	1.77	0.640	Yes	96.2	96.22
50yr-2hr	28.14	0.74	28.22	5.62	129.65	1.66	22.600	Yes	95.04	94.61
50yr-4hr	15.09	1.29	15.28	10.53	129.98	1.33	4.750	Yes	96.19	96.2
50yr-8hr	15.97	1.57	17.32	11.86	130.03	1.28	5.460	Yes	96.71	96.77
100yr-1hr	35.91	0.79	35.97	3.67	129.46	1.85	32.300	Yes	94.97	94.38
100yr-24hr	5.21	0.79	5.99	6.01	129.68	1.63	(0.020)	No	96.63	96.67
100yr-2hr	31.95	1.08	32.15	7.9	129.85	1.46	24.250	Yes	95.58	95.21
100yr-4hr	17.24	1.72	17.65	14.05	130.1	1.21	3.600	Yes	96.84	96.89
100yr-8hr	17.9	2.07	19.72	17.99	130.21	1.10	1.730	Yes	97.24	97.31

	Storm	Max. Stage	Min. Freeboard
P-SWMF	100yr-8hr	130.21	1.10
	Storm	Max. Flow (cfs)	Highwater
	100yr-8hr	17.99	130.21
	25yr-8hr	8.44	129.88

BARINEAU RD		
	Storm	Highwater
PRE	100yr-8hr	97.24
	25yr-8hr	96.34
POST	100yr-8hr	97.31
	25yr-8hr	96.40

6. ICPR Model Results

West-Basin (Present) and East-Basin (Pre-Development) Output

HOPKINS ELECTRIC PLANT
WEST PRESENT- EAST PRE-DEVELOPMENT-OUTPUT
MBC Job # R83.001
Date: March. 28, 2017

Name	Simulation	Max Stage ft	Warning Stage ft	Max Delta Stage ft	Max Surf Area ft2	Max Inflow cfs	Max Outflow cfs
E-EAST-PRE	100yr-1hr	134.00	136.00	0.0000	0	0.79	0.00
E-EAST-PRE	100yr-24hr	134.00	136.00	0.0000	0	0.79	0.00
E-EAST-PRE	100yr-2hr	134.00	136.00	0.0000	0	1.08	0.00
E-EAST-PRE	100yr-4hr	134.00	136.00	0.0000	0	1.72	0.00
E-EAST-PRE	100yr-8hr	134.00	136.00	0.0000	0	2.07	0.00
E-EAST-PRE	10yr-1hr	134.00	136.00	0.0000	0	0.13	0.00
E-EAST-PRE	10yr-24hr	134.00	136.00	0.0000	0	0.33	0.00
E-EAST-PRE	10yr-2hr	134.00	136.00	0.0000	0	0.31	0.00
E-EAST-PRE	10yr-4hr	134.00	136.00	0.0000	0	0.64	0.00
E-EAST-PRE	10yr-8hr	134.00	136.00	0.0000	0	0.71	0.00
E-EAST-PRE	25yr-1hr	134.00	136.00	0.0000	0	0.35	0.00
E-EAST-PRE	25yr-24hr	134.00	136.00	0.0000	0	0.43	0.00
E-EAST-PRE	25yr-2hr	134.00	136.00	0.0000	0	0.52	0.00
E-EAST-PRE	25yr-4hr	134.00	136.00	0.0000	0	1.04	0.00
E-EAST-PRE	25yr-8hr	134.00	136.00	0.0000	0	1.26	0.00
E-EAST-PRE	2yr-1hr	134.00	136.00	0.0000	0	0.00	0.00
E-EAST-PRE	2yr-24hr	134.00	136.00	0.0000	0	0.09	0.00
E-EAST-PRE	2yr-2hr	134.00	136.00	0.0000	0	0.05	0.00
E-EAST-PRE	2yr-4hr	134.00	136.00	0.0000	0	0.13	0.00
E-EAST-PRE	2yr-8hr	134.00	136.00	0.0000	0	0.18	0.00
E-EAST-PRE	50yr-1hr	134.00	136.00	0.0000	0	0.52	0.00
E-EAST-PRE	50yr-24hr	134.00	136.00	0.0000	0	0.58	0.00
E-EAST-PRE	50yr-2hr	134.00	136.00	0.0000	0	0.74	0.00
E-EAST-PRE	50yr-4hr	134.00	136.00	0.0000	0	1.29	0.00
E-EAST-PRE	50yr-8hr	134.00	136.00	0.0000	0	1.57	0.00
E-EAST-PRE	5yr-1hr	134.00	136.00	0.0000	0	0.03	0.00
E-EAST-PRE	5yr-24hr	134.00	136.00	0.0000	0	0.22	0.00
E-EAST-PRE	5yr-2hr	134.00	136.00	0.0000	0	0.17	0.00
E-EAST-PRE	5yr-4hr	134.00	136.00	0.0000	0	0.41	0.00
E-EAST-PRE	5yr-8hr	134.00	136.00	0.0000	0	0.48	0.00
E-WEST-NOW	100yr-1hr	134.00	136.00	0.0000	0	35.91	0.00
E-WEST-NOW	100yr-24hr	134.00	136.00	0.0000	0	5.21	0.00
E-WEST-NOW	100yr-2hr	134.00	136.00	0.0000	0	31.95	0.00
E-WEST-NOW	100yr-4hr	134.00	136.00	0.0000	0	17.24	0.00
E-WEST-NOW	100yr-8hr	134.00	136.00	0.0000	0	17.90	0.00
E-WEST-NOW	10yr-1hr	134.00	136.00	0.0000	0	24.00	0.00
E-WEST-NOW	10yr-24hr	134.00	136.00	0.0000	0	3.47	0.00
E-WEST-NOW	10yr-2hr	134.00	136.00	0.0000	0	21.13	0.00
E-WEST-NOW	10yr-4hr	134.00	136.00	0.0000	0	11.29	0.00
E-WEST-NOW	10yr-8hr	134.00	136.00	0.0000	0	12.10	0.00
E-WEST-NOW	25yr-1hr	134.00	136.00	0.0000	0	28.96	0.00
E-WEST-NOW	25yr-24hr	134.00	136.00	0.0000	0	3.99	0.00
E-WEST-NOW	25yr-2hr	134.00	136.00	0.0000	0	24.96	0.00
E-WEST-NOW	25yr-4hr	134.00	136.00	0.0000	0	13.74	0.00
E-WEST-NOW	25yr-8hr	134.00	136.00	0.0000	0	14.68	0.00
E-WEST-NOW	2yr-1hr	134.00	136.00	0.0000	0	15.16	0.00
E-WEST-NOW	2yr-24hr	134.00	136.00	0.0000	0	2.02	0.00
E-WEST-NOW	2yr-2hr	134.00	136.00	0.0000	0	14.10	0.00
E-WEST-NOW	2yr-4hr	134.00	136.00	0.0000	0	7.21	0.00
E-WEST-NOW	2yr-8hr	134.00	136.00	0.0000	0	7.74	0.00
E-WEST-NOW	50yr-1hr	134.00	136.00	0.0000	0	31.94	0.00
E-WEST-NOW	50yr-24hr	134.00	136.00	0.0000	0	4.55	0.00
E-WEST-NOW	50yr-2hr	134.00	136.00	0.0000	0	28.14	0.00
E-WEST-NOW	50yr-4hr	134.00	136.00	0.0000	0	15.09	0.00
E-WEST-NOW	50yr-8hr	134.00	136.00	0.0000	0	15.97	0.00
E-WEST-NOW	5yr-1hr	134.00	136.00	0.0000	0	20.04	0.00
E-WEST-NOW	5yr-24hr	134.00	136.00	0.0000	0	2.90	0.00
E-WEST-NOW	5yr-2hr	134.00	136.00	0.0000	0	17.93	0.00
E-WEST-NOW	5yr-4hr	134.00	136.00	0.0000	0	9.66	0.00
E-WEST-NOW	5yr-8hr	134.00	136.00	0.0000	0	10.58	0.00

Downstream Analysis Pre-Development Output

HOPKINS ELECTRIC PLANT-PRE
DOWNSTREAM ANALYSIS- OUTPUT-CONDENSED
MBC Job # R83.001
Date: Mar. 28, 2017

Name	Simulation	Max Stage ft	Warning Stage ft	Max Delta Stage ft	Max Surf Area ft2	Max Inflow cfs	Max Outflow cfs
B-2	100yr-1hr	120.51	123.00	0.0020	55114	35.70	23.02
B-2	100yr-24hr	120.44	123.00	-0.0004	52824	18.12	17.88
B-2	100yr-2hr	120.50	123.00	0.0014	54906	31.44	22.41
B-2	100yr-4hr	120.56	123.00	0.0007	55540	28.63	26.24
B-2	100yr-8hr	120.63	123.00	0.0007	57078	32.78	31.69
B-2	10yr-1hr	120.37	123.00	0.0015	51819	23.56	13.94
B-2	10yr-24hr	120.23	123.00	-0.0003	48370	6.70	6.58
B-2	10yr-2hr	120.36	123.00	0.0011	51541	20.52	13.24
B-2	10yr-4hr	120.30	123.00	0.0007	50075	11.21	9.77
B-2	10yr-8hr	120.33	123.00	0.0006	50902	12.58	11.69
B-2	25yr-1hr	120.43	123.00	0.0019	53220	28.58	17.62
B-2	25yr-24hr	120.28	123.00	-0.0003	49530	9.28	9.17
B-2	25yr-2hr	120.41	123.00	0.0012	52764	24.35	16.39
B-2	25yr-4hr	120.35	123.00	0.0006	51079	13.78	12.61
B-2	25yr-8hr	120.42	123.00	0.0006	52596	18.19	17.04
B-2	2yr-1hr	120.26	123.00	-0.0019	49171	14.71	7.81
B-2	2yr-24hr	120.10	123.00	-0.0001	45768	2.01	1.91
B-2	2yr-2hr	120.26	123.00	0.0010	49186	13.57	7.85
B-2	2yr-4hr	120.22	123.00	0.0005	48308	7.11	6.08
B-2	2yr-8hr	120.24	123.00	0.0005	48748	7.71	6.95
B-2	50yr-1hr	120.47	123.00	0.0017	54041	31.62	19.90
B-2	50yr-24hr	120.35	123.00	-0.0003	51013	13.02	12.81
B-2	50yr-2hr	120.45	123.00	0.0013	53754	27.56	19.09
B-2	50yr-4hr	120.42	123.00	0.0007	52645	18.82	17.04
B-2	50yr-8hr	120.50	123.00	0.0007	54371	23.63	22.46
B-2	5yr-1hr	120.32	123.00	-0.0020	50664	19.59	11.13
B-2	5yr-24hr	120.17	123.00	-0.0002	47048	4.13	4.01
B-2	5yr-2hr	120.31	123.00	0.0010	50488	17.35	10.72
B-2	5yr-4hr	120.26	123.00	0.0006	49386	9.57	8.27
B-2	5yr-8hr	120.30	123.00	0.0006	50167	10.80	9.98
B-3	100yr-1hr	124.09	126.00	0.0006	67173	35.97	35.70
B-3	100yr-24hr	124.03	126.00	-0.0001	66031	5.99	5.97
B-3	100yr-2hr	124.08	126.00	0.0004	67034	32.15	31.44
B-3	100yr-4hr	124.05	126.00	0.0002	66540	17.65	17.53
B-3	100yr-8hr	124.06	126.00	0.0002	66619	19.72	19.60
B-3	10yr-1hr	124.07	126.00	0.0005	66764	24.00	23.56
B-3	10yr-24hr	124.02	126.00	0.0000	65905	3.74	3.73
B-3	10yr-2hr	124.06	126.00	0.0003	66653	21.14	20.52
B-3	10yr-4hr	124.04	126.00	0.0001	66281	11.30	11.21
B-3	10yr-8hr	124.04	126.00	0.0002	66338	12.64	12.55
B-3	25yr-1hr	124.07	126.00	0.0006	66939	28.94	28.58
B-3	25yr-24hr	124.02	126.00	0.0001	65943	4.46	4.37
B-3	25yr-2hr	124.07	126.00	0.0004	66792	25.00	24.35
B-3	25yr-4hr	124.05	126.00	0.0002	66388	13.84	13.74
B-3	25yr-8hr	124.05	126.00	0.0002	66465	15.74	15.63
B-3	2yr-1hr	124.05	126.00	0.0004	66428	15.16	14.71
B-3	2yr-24hr	124.01	126.00	0.0003	65793	2.02	2.01
B-3	2yr-2hr	124.05	126.00	0.0003	66381	14.10	13.57
B-3	2yr-4hr	124.03	126.00	0.0001	66090	7.27	7.11
B-3	2yr-8hr	124.03	126.00	0.0002	66119	7.76	7.71
B-3	50yr-1hr	124.08	126.00	0.0006	67040	31.93	31.62
B-3	50yr-24hr	124.02	126.00	0.0002	65984	5.16	5.10
B-3	50yr-2hr	124.07	126.00	0.0004	66904	28.22	27.56
B-3	50yr-4hr	124.05	126.00	0.0002	66447	15.28	15.18
B-3	50yr-8hr	124.05	126.00	0.0003	66528	17.32	17.21
B-3	5yr-1hr	124.06	126.00	0.0005	66619	20.02	19.59
B-3	5yr-24hr	124.02	126.00	0.0001	65862	3.03	3.03
B-3	5yr-2hr	124.05	126.00	0.0003	66533	17.89	17.35
B-3	5yr-4hr	124.04	126.00	0.0001	66207	9.66	9.57
B-3	5yr-8hr	124.04	126.00	0.0002	66263	10.88	10.80
BARINEAU-RD	100yr-1hr	94.97	102.00	0.0032	19768	19.45	14.21
BARINEAU-RD	100yr-24hr	96.63	102.00	0.0029	49261	56.26	55.92
BARINEAU-RD	100yr-2hr	95.58	102.00	0.0031	33318	38.92	27.15
BARINEAU-RD	100yr-4hr	96.84	102.00	0.0033	52836	78.38	62.31
BARINEAU-RD	100yr-8hr	97.24	102.00	0.0039	81460	94.30	75.79
BARINEAU-RD	10yr-1hr	94.64	102.00	-0.0036	14379	12.45	8.65
BARINEAU-RD	10yr-24hr	95.49	102.00	-0.0022	31370	31.30	25.03
BARINEAU-RD	10yr-2hr	94.69	102.00	0.0031	15188	11.57	9.41
BARINEAU-RD	10yr-4hr	94.90	102.00	0.0022	18656	13.48	12.91
BARINEAU-RD	10yr-8hr	95.41	102.00	0.0019	29786	30.83	23.31
BARINEAU-RD	25yr-1hr	94.77	102.00	-0.0034	16582	15.06	10.78
BARINEAU-RD	25yr-24hr	95.87	102.00	0.0019	37129	36.90	34.28
BARINEAU-RD	25yr-2hr	94.81	102.00	0.0031	17277	14.29	11.49
BARINEAU-RD	25yr-4hr	95.68	102.00	0.0030	35091	40.13	29.62
BARINEAU-RD	25yr-8hr	96.34	102.00	0.0035	44601	54.40	47.15
BARINEAU-RD	2yr-1hr	94.38	102.00	-0.0049	10006	6.96	5.15
BARINEAU-RD	2yr-24hr	94.32	102.00	0.0006	8781	4.51	4.49
BARINEAU-RD	2yr-2hr	94.43	102.00	0.0031	10957	7.33	5.77

Name	Simulation	Max Stage ft	Warning Stage ft	Max Delta Stage ft	Max Surf Area ft2	Max Inflow cfs	Max Outflow cfs
BARINEAU-RD	2yr-4hr	94.41	102.00	0.0019	10625	6.18	5.52
BARINEAU-RD	2yr-8hr	94.44	102.00	0.0012	11205	6.43	5.96
BARINEAU-RD	50yr-1hr	94.85	102.00	0.0033	17852	16.52	12.10
BARINEAU-RD	50yr-24hr	96.20	102.00	0.0031	42102	43.65	43.12
BARINEAU-RD	50yr-2hr	95.04	102.00	0.0030	21349	17.71	15.60
BARINEAU-RD	50yr-4hr	96.19	102.00	0.0041	46053	51.12	42.87
BARINEAU-RD	50yr-8hr	96.71	102.00	0.0036	50615	69.47	58.17
BARINEAU-RD	5yr-1hr	94.52	102.00	-0.0050	12478	10.10	7.00
BARINEAU-RD	5yr-24hr	95.05	102.00	-0.0009	20854	15.89	15.75
BARINEAU-RD	5yr-2hr	94.57	102.00	0.0031	13345	9.85	7.73
BARINEAU-RD	5yr-4hr	94.57	102.00	0.0021	13293	8.14	7.68
BARINEAU-RD	5yr-8hr	94.98	102.00	0.0016	19849	14.68	14.51
BETHEL-CHURCH-	100yr-1hr	142.05	155.00	0.0001	140570	5.35	0.00
BETHEL-CHURCH-	100yr-24hr	143.77	155.00	0.0005	156788	7.71	0.00
BETHEL-CHURCH-	100yr-2hr	142.22	155.00	0.0003	142182	8.37	0.00
BETHEL-CHURCH-	100yr-4hr	142.54	155.00	0.0006	145259	17.59	0.00
BETHEL-CHURCH-	100yr-8hr	143.05	155.00	0.0007	150001	24.82	0.00
BETHEL-CHURCH-	10yr-1hr	142.00	155.00	0.0000	140135	0.00	0.00
BETHEL-CHURCH-	10yr-24hr	142.64	155.00	0.0002	146132	2.85	0.00
BETHEL-CHURCH-	10yr-2hr	142.02	155.00	0.0001	140300	1.21	0.00
BETHEL-CHURCH-	10yr-4hr	142.11	155.00	0.0002	141150	4.79	0.00
BETHEL-CHURCH-	10yr-8hr	142.31	155.00	0.0003	143098	5.58	0.00
BETHEL-CHURCH-	25yr-1hr	142.00	155.00	0.0000	140177	0.56	0.00
BETHEL-CHURCH-	25yr-24hr	142.93	155.00	0.0003	148907	4.15	0.00
BETHEL-CHURCH-	25yr-2hr	142.06	155.00	0.0002	140742	3.13	0.00
BETHEL-CHURCH-	25yr-4hr	142.25	155.00	0.0003	142510	9.53	0.00
BETHEL-CHURCH-	25yr-8hr	142.60	155.00	0.0005	145798	12.69	0.00
BETHEL-CHURCH-	2yr-1hr	142.00	155.00	0.0000	140135	0.00	0.00
BETHEL-CHURCH-	2yr-24hr	142.08	155.00	0.0001	140844	0.53	0.00
BETHEL-CHURCH-	2yr-2hr	142.00	155.00	0.0000	140135	0.00	0.00
BETHEL-CHURCH-	2yr-4hr	142.00	155.00	0.0000	140138	0.04	0.00
BETHEL-CHURCH-	2yr-8hr	142.03	155.00	0.0001	140400	0.48	0.00
BETHEL-CHURCH-	50yr-1hr	142.02	155.00	0.0001	140297	2.16	0.00
BETHEL-CHURCH-	50yr-24hr	143.29	155.00	0.0004	152338	5.72	0.00
BETHEL-CHURCH-	50yr-2hr	142.12	155.00	0.0002	141302	5.23	0.00
BETHEL-CHURCH-	50yr-4hr	142.35	155.00	0.0004	143468	12.47	0.00
BETHEL-CHURCH-	50yr-8hr	142.77	155.00	0.0007	147382	17.27	0.00
BETHEL-CHURCH-	5yr-1hr	142.00	155.00	0.0000	140135	0.00	0.00
BETHEL-CHURCH-	5yr-24hr	142.36	155.00	0.0002	143554	1.83	0.00
BETHEL-CHURCH-	5yr-2hr	142.00	155.00	0.0000	140144	0.19	0.00
BETHEL-CHURCH-	5yr-4hr	142.04	155.00	0.0001	140539	2.11	0.00
BETHEL-CHURCH-	5yr-8hr	142.18	155.00	0.0002	141865	3.46	0.00
CONFLUENCE	100yr-1hr	104.59	107.50	0.0020	27750	22.58	19.45
CONFLUENCE	100yr-24hr	104.78	107.50	0.0009	48024	50.46	50.43
CONFLUENCE	100yr-2hr	104.70	107.50	0.0014	37399	30.25	36.36
CONFLUENCE	100yr-4hr	104.91	107.50	-0.0013	56751	62.84	71.16
CONFLUENCE	100yr-8hr	104.94	107.50	-0.0026	49159	75.97	86.30
CONFLUENCE	10yr-1hr	104.44	107.50	0.0019	21075	13.48	12.45
CONFLUENCE	10yr-24hr	104.61	107.50	-0.0016	39330	23.64	29.50
CONFLUENCE	10yr-2hr	104.45	107.50	0.0014	21359	12.89	11.57
CONFLUENCE	10yr-4hr	104.48	107.50	0.0010	25922	13.20	13.09
CONFLUENCE	10yr-8hr	104.63	107.50	-0.0016	33118	22.18	29.48
CONFLUENCE	25yr-1hr	104.51	107.50	0.0020	23892	17.13	15.06
CONFLUENCE	25yr-24hr	104.68	107.50	-0.0011	42614	31.63	34.45
CONFLUENCE	25yr-2hr	104.50	107.50	0.0014	23789	15.98	14.29
CONFLUENCE	25yr-4hr	104.71	107.50	-0.0014	37119	29.81	37.77
CONFLUENCE	25yr-8hr	104.83	107.50	-0.0015	51062	44.44	49.92
CONFLUENCE	2yr-1hr	104.31	107.50	-0.0029	15364	7.41	6.96
CONFLUENCE	2yr-24hr	104.26	107.50	0.0003	15219	4.50	4.49
CONFLUENCE	2yr-2hr	104.33	107.50	0.0013	16132	7.61	7.33
CONFLUENCE	2yr-4hr	104.32	107.50	0.0009	15511	6.04	6.18
CONFLUENCE	2yr-8hr	104.34	107.50	0.0007	16344	6.85	6.43
CONFLUENCE	50yr-1hr	104.54	107.50	0.0017	25467	19.40	16.52
CONFLUENCE	50yr-24hr	104.71	107.50	-0.0015	44539	39.41	39.52
CONFLUENCE	50yr-2hr	104.55	107.50	0.0016	25770	18.65	16.83
CONFLUENCE	50yr-4hr	104.81	107.50	-0.0014	49175	41.24	47.11
CONFLUENCE	50yr-8hr	104.86	107.50	0.0009	53368	56.41	62.50
CONFLUENCE	5yr-1hr	104.39	107.50	-0.0028	18582	10.68	10.10
CONFLUENCE	5yr-24hr	104.52	107.50	0.0007	27794	15.01	14.97
CONFLUENCE	5yr-2hr	104.40	107.50	0.0013	19158	10.42	9.85
CONFLUENCE	5yr-4hr	104.38	107.50	0.0010	18233	8.24	8.14
CONFLUENCE	5yr-8hr	104.50	107.50	0.0008	27044	14.08	14.03
D-3	100yr-1hr	117.41	126.00	0.0035	73956	43.36	3.60
D-3	100yr-24hr	120.79	126.00	0.0026	212263	38.83	19.02
D-3	100yr-2hr	118.35	126.00	0.0039	112417	56.56	9.42
D-3	100yr-4hr	119.79	126.00	0.0035	171333	83.52	15.80
D-3	100yr-8hr	120.77	126.00	0.0039	211419	99.84	18.95

Name	Simulation	Max Stage ft	Warning Stage ft	Max Delta Stage ft	Max Surf Area ft2	Max Inflow cfs	Max Outflow cfs
D-3	10yr-1hr	115.89	126.00	0.0030	37465	10.41	0.00
D-3	10yr-24hr	118.67	126.00	0.0027	125433	16.35	11.59
D-3	10yr-2hr	116.64	126.00	0.0031	50728	18.00	0.74
D-3	10yr-4hr	117.91	126.00	0.0032	94284	33.55	6.46
D-3	10yr-8hr	118.64	126.00	0.0033	124117	38.00	11.37
D-3	25yr-1hr	116.56	126.00	0.0031	49264	21.85	0.56
D-3	25yr-24hr	119.18	126.00	0.0026	146374	21.65	14.44
D-3	25yr-2hr	117.34	126.00	0.0032	70885	28.94	3.23
D-3	25yr-4hr	118.70	126.00	0.0035	126802	52.30	11.81
D-3	25yr-8hr	119.58	126.00	0.0036	162533	63.24	15.07
D-3	2yr-1hr	115.02	126.00	0.0002	22321	0.17	0.00
D-3	2yr-24hr	117.31	126.00	0.0014	69795	4.91	3.11
D-3	2yr-2hr	115.37	126.00	0.0019	28475	4.31	0.00
D-3	2yr-4hr	116.16	126.00	0.0029	42299	9.19	0.07
D-3	2yr-8hr	117.11	126.00	0.0028	61675	10.67	2.24
D-3	50yr-1hr	116.95	126.00	0.0032	56066	30.37	1.61
D-3	50yr-24hr	119.94	126.00	0.0023	177285	29.24	16.29
D-3	50yr-2hr	117.83	126.00	0.0039	90847	40.35	5.94
D-3	50yr-4hr	119.12	126.00	0.0038	143883	63.83	14.19
D-3	50yr-8hr	120.06	126.00	0.0036	182456	77.32	16.71
D-3	5yr-1hr	115.39	126.00	0.0028	28887	4.10	0.00
D-3	5yr-24hr	118.16	126.00	0.0023	104370	11.34	8.08
D-3	5yr-2hr	116.03	126.00	0.0030	40009	10.77	0.02
D-3	5yr-4hr	117.31	126.00	0.0031	69548	22.57	3.08
D-3	5yr-8hr	118.13	126.00	0.0032	103531	25.48	7.94
E-SITE	100yr-1hr	126.46	131.00	0.0050	113	35.97	35.97
E-SITE	100yr-24hr	126.21	131.00	0.0050	113	5.99	5.99
E-SITE	100yr-2hr	126.44	131.00	-0.0134	113	32.16	32.15
E-SITE	100yr-4hr	126.33	131.00	-0.0075	113	17.66	17.65
E-SITE	100yr-8hr	126.34	131.00	0.0050	113	19.72	19.72
E-SITE	10yr-1hr	126.38	131.00	0.0050	113	24.00	24.00
E-SITE	10yr-24hr	126.18	131.00	0.0050	113	3.74	3.74
E-SITE	10yr-2hr	126.36	131.00	0.0050	113	21.14	21.14
E-SITE	10yr-4hr	126.27	131.00	0.0050	113	11.31	11.30
E-SITE	10yr-8hr	126.28	131.00	-0.0050	113	12.64	12.64
E-SITE	25yr-1hr	126.41	131.00	0.0050	113	28.97	28.94
E-SITE	25yr-24hr	126.19	131.00	0.0050	113	4.39	4.46
E-SITE	25yr-2hr	126.39	131.00	0.0050	113	25.00	25.00
E-SITE	25yr-4hr	126.29	131.00	0.0050	113	13.84	13.84
E-SITE	25yr-8hr	126.31	131.00	0.0050	113	15.74	15.74
E-SITE	2yr-1hr	126.31	131.00	0.0050	113	15.16	15.16
E-SITE	2yr-24hr	126.15	131.00	0.0050	113	2.02	2.02
E-SITE	2yr-2hr	126.30	131.00	0.0050	113	14.11	14.10
E-SITE	2yr-4hr	126.23	131.00	0.0050	113	7.21	7.27
E-SITE	2yr-8hr	126.23	131.00	0.0050	113	7.76	7.76
E-SITE	50yr-1hr	126.44	131.00	0.0050	113	31.96	31.93
E-SITE	50yr-24hr	126.20	131.00	0.0050	113	5.11	5.16
E-SITE	50yr-2hr	126.41	131.00	-0.0116	113	28.24	28.22
E-SITE	50yr-4hr	126.31	131.00	0.0050	113	15.29	15.28
E-SITE	50yr-8hr	126.32	131.00	0.0050	113	17.32	17.32
E-SITE	5yr-1hr	126.35	131.00	0.0050	113	20.05	20.02
E-SITE	5yr-24hr	126.17	131.00	0.0050	113	3.04	3.03
E-SITE	5yr-2hr	126.33	131.00	0.0050	113	17.93	17.89
E-SITE	5yr-4hr	126.25	131.00	0.0050	113	9.66	9.66
E-SITE	5yr-8hr	126.27	131.00	0.0050	113	10.88	10.88
POA-BARINEAU	100yr-1hr	92.00	95.00	0.0000	5	14.21	0.00
POA-BARINEAU	100yr-24hr	92.00	95.00	0.0000	5	55.92	0.00
POA-BARINEAU	100yr-2hr	92.00	95.00	0.0000	5	27.15	0.00
POA-BARINEAU	100yr-4hr	92.00	95.00	0.0000	5	62.31	0.00
POA-BARINEAU	100yr-8hr	92.00	95.00	0.0000	5	75.79	0.00
POA-BARINEAU	10yr-1hr	92.00	95.00	0.0000	5	8.65	0.00
POA-BARINEAU	10yr-24hr	92.00	95.00	0.0000	5	25.03	0.00
POA-BARINEAU	10yr-2hr	92.00	95.00	0.0000	5	9.41	0.00
POA-BARINEAU	10yr-4hr	92.00	95.00	0.0000	5	12.91	0.00
POA-BARINEAU	10yr-8hr	92.00	95.00	0.0000	5	23.31	0.00
POA-BARINEAU	25yr-1hr	92.00	95.00	0.0000	5	10.78	0.00
POA-BARINEAU	25yr-24hr	92.00	95.00	0.0000	5	34.28	0.00
POA-BARINEAU	25yr-2hr	92.00	95.00	0.0000	5	11.49	0.00
POA-BARINEAU	25yr-4hr	92.00	95.00	0.0000	5	29.62	0.00
POA-BARINEAU	25yr-8hr	92.00	95.00	0.0000	5	47.15	0.00
POA-BARINEAU	2yr-1hr	92.00	95.00	0.0000	5	5.15	0.00
POA-BARINEAU	2yr-24hr	92.00	95.00	0.0000	5	4.49	0.00
POA-BARINEAU	2yr-2hr	92.00	95.00	0.0000	5	5.77	0.00
POA-BARINEAU	2yr-4hr	92.00	95.00	0.0000	5	5.52	0.00
POA-BARINEAU	2yr-8hr	92.00	95.00	0.0000	5	5.96	0.00
POA-BARINEAU	50yr-1hr	92.00	95.00	0.0000	5	12.10	0.00
POA-BARINEAU	50yr-24hr	92.00	95.00	0.0000	5	43.12	0.00
POA-BARINEAU	50yr-2hr	92.00	95.00	0.0000	5	15.60	0.00

Name	Simulation	Max Stage ft	Warning Stage ft	Max Delta Stage ft	Max Surf Area ft2	Max Inflow cfs	Max Outflow cfs
POA-BARINEAU	50yr-4hr	92.00	95.00	0.0000	5	42.87	0.00
POA-BARINEAU	50yr-8hr	92.00	95.00	0.0000	5	58.17	0.00
POA-BARINEAU	5yr-1hr	92.00	95.00	0.0000	5	7.00	0.00
POA-BARINEAU	5yr-24hr	92.00	95.00	0.0000	5	15.75	0.00
POA-BARINEAU	5yr-2hr	92.00	95.00	0.0000	5	7.73	0.00
POA-BARINEAU	5yr-4hr	92.00	95.00	0.0000	5	7.68	0.00
POA-BARINEAU	5yr-8hr	92.00	95.00	0.0000	5	14.51	0.00
RAILROAD-1	100yr-1hr	115.18	125.00	0.0004	7255	3.60	3.56
RAILROAD-1	100yr-24hr	115.40	125.00	0.0006	18078	19.02	19.02
RAILROAD-1	100yr-2hr	115.26	125.00	0.0005	10630	9.42	9.16
RAILROAD-1	100yr-4hr	115.36	125.00	0.0006	16449	15.80	15.72
RAILROAD-1	100yr-8hr	115.40	125.00	0.0006	18046	18.95	18.95
RAILROAD-1	10yr-1hr	115.00	125.00	0.0000	115	0.00	0.00
RAILROAD-1	10yr-24hr	115.31	125.00	-0.0019	14159	11.59	11.59
RAILROAD-1	10yr-2hr	115.09	125.00	0.0004	3583	0.74	0.59
RAILROAD-1	10yr-4hr	115.23	125.00	0.0004	9174	6.46	6.38
RAILROAD-1	10yr-8hr	115.31	125.00	0.0011	14026	11.37	11.37
RAILROAD-1	25yr-1hr	115.08	125.00	0.0005	3437	0.56	0.53
RAILROAD-1	25yr-24hr	115.35	125.00	0.0011	15777	14.44	14.43
RAILROAD-1	25yr-2hr	115.17	125.00	0.0004	6771	3.23	2.99
RAILROAD-1	25yr-4hr	115.31	125.00	0.0012	14200	11.81	11.66
RAILROAD-1	25yr-8hr	115.35	125.00	0.0006	16110	15.07	15.07
RAILROAD-1	2yr-1hr	115.00	125.00	0.0000	117	0.00	0.00
RAILROAD-1	2yr-24hr	115.17	125.00	0.0002	6871	3.11	3.11
RAILROAD-1	2yr-2hr	115.00	125.00	0.0000	117	0.00	0.00
RAILROAD-1	2yr-4hr	115.03	125.00	0.0004	1352	0.07	0.04
RAILROAD-1	2yr-8hr	115.15	125.00	0.0004	6012	2.24	2.22
RAILROAD-1	50yr-1hr	115.13	125.00	0.0005	5240	1.61	1.57
RAILROAD-1	50yr-24hr	115.37	125.00	0.0011	16740	16.29	16.29
RAILROAD-1	50yr-2hr	115.22	125.00	0.0005	8755	5.94	5.68
RAILROAD-1	50yr-4hr	115.34	125.00	0.0009	15594	14.19	14.10
RAILROAD-1	50yr-8hr	115.37	125.00	0.0007	16953	16.71	16.71
RAILROAD-1	5yr-1hr	115.00	125.00	0.0000	117	0.00	0.00
RAILROAD-1	5yr-24hr	115.25	125.00	0.0003	10101	8.08	8.08
RAILROAD-1	5yr-2hr	115.01	125.00	0.0002	461	0.02	0.00
RAILROAD-1	5yr-4hr	115.17	125.00	0.0004	6764	3.08	2.99
RAILROAD-1	5yr-8hr	115.25	125.00	0.0004	10030	7.94	7.94
TRANS RD	100yr-1hr	110.19	112.00	0.0008	33707	23.09	22.58
TRANS RD	100yr-24hr	110.23	112.00	-0.0002	34026	30.44	30.43
TRANS RD	100yr-2hr	110.19	112.00	0.0005	33604	22.59	22.15
TRANS RD	100yr-4hr	110.28	112.00	0.0003	35840	44.22	44.13
TRANS RD	100yr-8hr	110.31	112.00	0.0003	36984	53.70	53.64
TRANS RD	10yr-1hr	110.14	112.00	0.0007	31921	13.94	13.48
TRANS RD	10yr-24hr	110.12	112.00	-0.0002	30977	11.03	11.02
TRANS RD	10yr-2hr	110.13	112.00	0.0005	31797	13.24	12.89
TRANS RD	10yr-4hr	110.11	112.00	0.0002	31101	9.78	9.76
TRANS RD	10yr-8hr	110.13	112.00	0.0002	31387	13.09	13.04
TRANS RD	25yr-1hr	110.16	112.00	0.0008	32672	17.62	17.13
TRANS RD	25yr-24hr	110.15	112.00	-0.0002	31769	15.53	15.52
TRANS RD	25yr-2hr	110.15	112.00	0.0005	32440	16.39	15.98
TRANS RD	25yr-4hr	110.17	112.00	0.0003	32447	19.32	19.28
TRANS RD	25yr-8hr	110.22	112.00	0.0002	33750	28.35	28.28
TRANS RD	2yr-1hr	110.09	112.00	-0.0008	30543	7.81	7.41
TRANS RD	2yr-24hr	110.04	112.00	-0.0001	28970	1.91	1.89
TRANS RD	2yr-2hr	110.10	112.00	0.0004	30594	7.85	7.61
TRANS RD	2yr-4hr	110.08	112.00	0.0002	30199	6.08	6.04
TRANS RD	2yr-8hr	110.09	112.00	0.0002	30405	6.95	6.85
TRANS RD	50yr-1hr	110.17	112.00	0.0007	33115	19.90	19.40
TRANS RD	50yr-24hr	110.18	112.00	-0.0002	32751	21.60	21.59
TRANS RD	50yr-2hr	110.17	112.00	0.0006	32968	19.10	18.65
TRANS RD	50yr-4hr	110.21	112.00	0.0003	33684	27.75	27.70
TRANS RD	50yr-8hr	110.26	112.00	0.0002	35019	37.77	37.70
TRANS RD	5yr-1hr	110.12	112.00	-0.0008	31313	11.13	10.68
TRANS RD	5yr-24hr	110.09	112.00	-0.0001	30089	6.58	6.56
TRANS RD	5yr-2hr	110.12	112.00	0.0004	31255	10.72	10.42
TRANS RD	5yr-4hr	110.10	112.00	0.0002	30747	8.27	8.24
TRANS RD	5yr-8hr	110.11	112.00	0.0002	31129	9.98	9.87

HOPKINS ELECTRIC PLANT-PRE
DOWNSTREAM ANALYSIS- OUTPUT
MBC Job # R83.001
Date: Mar. 28, 2017

Name	Group	Simulation	Max Time Stage hrs	Max Stage ft	Warning Stage ft	Max Delta Stage ft	Max Surf Area ft2	Max Time Inflow hrs	Max Inflow cfs	Max Time Outflow hrs	Max Outflow cfs
B-2DOWN-STREAM-ANA		100yr-1hr	0.79	120.51	123.00	0.0020	55114	0.61	35.70	0.79	23.02
B-2DOWN-STREAM-ANA		100yr-24hr	15.27	120.44	123.00	-0.0004	52824	15.05	18.12	15.27	17.88
B-2DOWN-STREAM-ANA		100yr-2hr	0.93	120.50	123.00	0.0014	54906	0.82	31.44	0.93	22.41
B-2DOWN-STREAM-ANA		100yr-4hr	3.21	120.56	123.00	0.0007	55540	3.04	28.63	3.21	26.24
B-2DOWN-STREAM-ANA		100yr-8hr	5.11	120.63	123.00	0.0007	57078	5.03	32.78	5.11	31.69
B-2DOWN-STREAM-ANA		10yr-1hr	0.83	120.37	123.00	0.0015	51819	0.62	23.56	0.83	13.94
B-2DOWN-STREAM-ANA		10yr-24hr	19.14	120.23	123.00	-0.0003	48370	19.03	6.70	19.14	6.58
B-2DOWN-STREAM-ANA		10yr-2hr	0.96	120.36	123.00	0.0011	51541	0.82	20.52	0.96	13.24
B-2DOWN-STREAM-ANA		10yr-4hr	2.55	120.30	123.00	0.0007	50075	2.02	11.21	2.55	9.77
B-2DOWN-STREAM-ANA		10yr-8hr	4.06	120.33	123.00	0.0006	50902	4.01	12.58	4.06	11.69
B-2DOWN-STREAM-ANA		25yr-1hr	0.81	120.43	123.00	0.0019	53220	0.62	28.58	0.81	17.62
B-2DOWN-STREAM-ANA		25yr-24hr	19.12	120.28	123.00	-0.0003	49530	19.04	9.28	19.12	9.17
B-2DOWN-STREAM-ANA		25yr-2hr	0.95	120.41	123.00	0.0012	52764	0.82	24.35	0.95	16.39
B-2DOWN-STREAM-ANA		25yr-4hr	3.12	120.35	123.00	0.0006	51079	3.04	13.78	3.12	12.61
B-2DOWN-STREAM-ANA		25yr-8hr	5.14	120.42	123.00	0.0006	52596	5.03	18.19	5.14	17.04
B-2DOWN-STREAM-ANA		2yr-1hr	0.86	120.26	123.00	-0.0019	49171	0.64	14.71	0.86	7.81
B-2DOWN-STREAM-ANA		2yr-24hr	12.09	120.10	123.00	-0.0001	45768	12.00	2.01	12.09	1.91
B-2DOWN-STREAM-ANA		2yr-2hr	1.02	120.26	123.00	0.0010	49186	0.83	13.57	1.02	7.85
B-2DOWN-STREAM-ANA		2yr-4hr	2.57	120.22	123.00	0.0005	48308	2.03	7.11	2.57	6.08
B-2DOWN-STREAM-ANA		2yr-8hr	4.07	120.24	123.00	0.0005	48748	4.01	7.71	4.07	6.95
B-2DOWN-STREAM-ANA		50yr-1hr	0.80	120.47	123.00	0.0017	54041	0.61	31.62	0.80	19.90
B-2DOWN-STREAM-ANA		50yr-24hr	15.38	120.35	123.00	-0.0003	51013	15.05	13.02	15.38	12.81
B-2DOWN-STREAM-ANA		50yr-2hr	0.94	120.45	123.00	0.0013	53754	0.82	27.56	0.94	19.09
B-2DOWN-STREAM-ANA		50yr-4hr	3.18	120.42	123.00	0.0007	52645	3.04	18.82	3.18	17.04
B-2DOWN-STREAM-ANA		50yr-8hr	5.13	120.50	123.00	0.0007	54371	5.03	23.63	5.13	22.46
B-2DOWN-STREAM-ANA		5yr-1hr	0.84	120.32	123.00	-0.0020	50664	0.63	19.59	0.84	11.13
B-2DOWN-STREAM-ANA		5yr-24hr	19.17	120.17	123.00	-0.0002	47048	19.03	4.13	19.17	4.01
B-2DOWN-STREAM-ANA		5yr-2hr	0.99	120.31	123.00	0.0010	50488	0.83	17.35	0.99	10.72
B-2DOWN-STREAM-ANA		5yr-4hr	2.56	120.26	123.00	0.0006	49386	2.02	9.57	2.56	8.27
B-2DOWN-STREAM-ANA		5yr-8hr	4.06	120.30	123.00	0.0006	50167	4.00	10.80	4.06	9.98
B-3DOWN-STREAM-ANA		100yr-1hr	0.61	124.09	126.00	0.0006	67173	0.60	35.97	0.61	35.70
B-3DOWN-STREAM-ANA		100yr-24hr	12.00	124.03	126.00	-0.0001	66031	12.00	5.99	12.00	5.97
B-3DOWN-STREAM-ANA		100yr-2hr	0.82	124.08	126.00	0.0004	67034	0.80	32.15	0.82	31.44
B-3DOWN-STREAM-ANA		100yr-4hr	2.02	124.05	126.00	0.0002	66540	2.00	17.65	2.02	17.53
B-3DOWN-STREAM-ANA		100yr-8hr	4.00	124.06	126.00	0.0002	66619	4.00	19.72	4.00	19.60
B-3DOWN-STREAM-ANA		10yr-1hr	0.62	124.07	126.00	0.0005	66764	0.60	24.00	0.62	23.56
B-3DOWN-STREAM-ANA		10yr-24hr	12.01	124.02	126.00	0.0000	65905	11.99	3.74	12.01	3.73
B-3DOWN-STREAM-ANA		10yr-2hr	0.82	124.06	126.00	0.0003	66653	0.80	21.14	0.82	20.52
B-3DOWN-STREAM-ANA		10yr-4hr	2.02	124.04	126.00	0.0001	66281	2.00	11.30	2.02	11.21
B-3DOWN-STREAM-ANA		10yr-8hr	4.00	124.04	126.00	0.0002	66338	4.00	12.64	4.00	12.55
B-3DOWN-STREAM-ANA		25yr-1hr	0.62	124.07	126.00	0.0006	66939	0.60	28.94	0.62	28.58
B-3DOWN-STREAM-ANA		25yr-24hr	12.00	124.02	126.00	0.0001	65943	12.05	4.46	12.00	4.37
B-3DOWN-STREAM-ANA		25yr-2hr	0.82	124.07	126.00	0.0004	66792	0.80	25.00	0.82	24.35
B-3DOWN-STREAM-ANA		25yr-4hr	2.02	124.05	126.00	0.0002	66388	2.00	13.84	2.02	13.74
B-3DOWN-STREAM-ANA		25yr-8hr	4.00	124.05	126.00	0.0002	66465	4.00	15.74	4.00	15.63
B-3DOWN-STREAM-ANA		2yr-1hr	0.64	124.05	126.00	0.0004	66428	0.60	15.16	0.64	14.71
B-3DOWN-STREAM-ANA		2yr-24hr	12.00	124.01	126.00	0.0003	65793	12.00	2.02	12.00	2.01
B-3DOWN-STREAM-ANA		2yr-2hr	0.83	124.05	126.00	0.0003	66381	0.80	14.10	0.83	13.57
B-3DOWN-STREAM-ANA		2yr-4hr	2.03	124.03	126.00	0.0001	66090	2.04	7.27	2.03	7.11
B-3DOWN-STREAM-ANA		2yr-8hr	4.01	124.03	126.00	0.0002	66119	4.00	7.76	4.01	7.71
B-3DOWN-STREAM-ANA		50yr-1hr	0.61	124.08	126.00	0.0006	67040	0.59	31.93	0.61	31.62
B-3DOWN-STREAM-ANA		50yr-24hr	12.00	124.02	126.00	0.0002	65984	12.03	5.16	12.00	5.10
B-3DOWN-STREAM-ANA		50yr-2hr	0.82	124.07	126.00	0.0004	66904	0.80	28.22	0.82	27.56
B-3DOWN-STREAM-ANA		50yr-4hr	2.02	124.05	126.00	0.0002	66447	2.00	15.28	2.02	15.18
B-3DOWN-STREAM-ANA		50yr-8hr	4.00	124.05	126.00	0.0003	66528	4.00	17.32	4.00	17.21

Name	Group	Simulation	Max Time Stage hrs	Max Stage ft	Warning Stage ft	Max Delta Stage ft	Max Surf Area ft2	Max Time Inflow hrs	Max Inflow cfs	Max Time Outflow hrs	Max Outflow cfs
B-3DOWN	STREAM-ANA	5yr-1hr	0.63	124.06	126.00	0.0005	66619	0.60	20.02	0.63	19.59
B-3DOWN	STREAM-ANA	5yr-24hr	12.01	124.02	126.00	0.0001	65862	11.99	3.03	12.01	3.03
B-3DOWN	STREAM-ANA	5yr-2hr	0.83	124.05	126.00	0.0003	66533	0.80	17.89	0.83	17.35
B-3DOWN	STREAM-ANA	5yr-4hr	2.02	124.04	126.00	0.0001	66207	2.00	9.66	2.02	9.57
B-3DOWN	STREAM-ANA	5yr-8hr	4.00	124.04	126.00	0.0002	66263	4.00	10.88	4.00	10.80
BARINEAU-RDDOWN	STREAM-ANA	100yr-1hr	1.26	94.97	102.00	0.0032	19768	0.99	19.45	1.26	14.21
BARINEAU-RDDOWN	STREAM-ANA	100yr-24hr	16.32	96.63	102.00	0.0029	49261	16.13	56.26	16.32	55.92
BARINEAU-RDDOWN	STREAM-ANA	100yr-2hr	2.00	95.58	102.00	0.0031	33318	1.90	38.92	2.00	27.15
BARINEAU-RDDOWN	STREAM-ANA	100yr-4hr	3.80	96.84	102.00	0.0033	52836	3.43	78.38	3.80	62.31
BARINEAU-RDDOWN	STREAM-ANA	100yr-8hr	5.59	97.24	102.00	0.0039	81460	5.43	94.30	5.59	75.79
BARINEAU-RDDOWN	STREAM-ANA	10yr-1hr	1.26	94.64	102.00	-0.0036	14379	0.91	12.45	1.26	8.65
BARINEAU-RDDOWN	STREAM-ANA	10yr-24hr	19.68	95.49	102.00	-0.0022	31370	19.47	31.30	19.68	25.03
BARINEAU-RDDOWN	STREAM-ANA	10yr-2hr	1.47	94.69	102.00	0.0031	15188	1.02	11.57	1.47	9.41
BARINEAU-RDDOWN	STREAM-ANA	10yr-4hr	4.00	94.90	102.00	0.0022	18656	3.91	13.48	4.00	12.91
BARINEAU-RDDOWN	STREAM-ANA	10yr-8hr	6.50	95.41	102.00	0.0019	29786	5.73	30.83	6.50	23.31
BARINEAU-RDDOWN	STREAM-ANA	25yr-1hr	1.24	94.77	102.00	-0.0034	16582	0.86	15.06	1.24	10.78
BARINEAU-RDDOWN	STREAM-ANA	25yr-24hr	19.50	95.87	102.00	0.0019	37129	15.36	36.90	19.50	34.28
BARINEAU-RDDOWN	STREAM-ANA	25yr-2hr	1.46	94.81	102.00	0.0031	17277	1.18	14.29	1.46	11.49
BARINEAU-RDDOWN	STREAM-ANA	25yr-4hr	4.00	95.68	102.00	0.0030	35091	3.50	40.13	4.00	29.62
BARINEAU-RDDOWN	STREAM-ANA	25yr-8hr	5.78	96.34	102.00	0.0035	44601	5.14	54.40	5.78	47.15
BARINEAU-RDDOWN	STREAM-ANA	2yr-1hr	1.19	94.38	102.00	-0.0049	10006	1.03	6.96	1.19	5.15
BARINEAU-RDDOWN	STREAM-ANA	2yr-24hr	21.88	94.32	102.00	0.0006	8781	21.58	4.51	21.88	4.49
BARINEAU-RDDOWN	STREAM-ANA	2yr-2hr	1.53	94.43	102.00	0.0031	10957	1.20	7.33	1.53	5.77
BARINEAU-RDDOWN	STREAM-ANA	2yr-4hr	2.98	94.41	102.00	0.0019	10625	2.59	6.18	2.98	5.52
BARINEAU-RDDOWN	STREAM-ANA	2yr-8hr	4.42	94.44	102.00	0.0012	11205	4.26	6.43	4.42	5.96
BARINEAU-RDDOWN	STREAM-ANA	50yr-1hr	1.24	94.85	102.00	0.0033	17852	0.83	16.52	1.24	12.10
BARINEAU-RDDOWN	STREAM-ANA	50yr-24hr	19.38	96.20	102.00	0.0031	42102	19.19	43.65	19.38	43.12
BARINEAU-RDDOWN	STREAM-ANA	50yr-2hr	2.00	95.04	102.00	0.0030	21349	2.00	17.71	2.00	15.60
BARINEAU-RDDOWN	STREAM-ANA	50yr-4hr	4.00	96.19	102.00	0.0041	46053	3.45	51.12	4.00	42.87
BARINEAU-RDDOWN	STREAM-ANA	50yr-8hr	5.59	96.71	102.00	0.0036	50615	5.19	69.47	5.59	58.17
BARINEAU-RDDOWN	STREAM-ANA	5yr-1hr	1.27	94.52	102.00	-0.0050	12478	0.98	10.10	1.27	7.00
BARINEAU-RDDOWN	STREAM-ANA	5yr-24hr	19.77	95.05	102.00	-0.0009	20854	19.42	15.89	19.77	15.75
BARINEAU-RDDOWN	STREAM-ANA	5yr-2hr	1.50	94.57	102.00	0.0031	13345	1.10	9.85	1.50	7.73
BARINEAU-RDDOWN	STREAM-ANA	5yr-4hr	2.90	94.57	102.00	0.0021	13293	2.68	8.14	2.90	7.68
BARINEAU-RDDOWN	STREAM-ANA	5yr-8hr	7.52	94.98	102.00	0.0016	19849	7.28	14.68	7.52	14.51
BETHEL-CHURCH-DOWN	STREAM-ANA	100yr-1hr	1.80	142.05	155.00	0.0001	140570	0.87	5.35	0.00	0.00
BETHEL-CHURCH-DOWN	STREAM-ANA	100yr-24hr	24.00	143.77	155.00	0.0005	156788	12.03	7.71	0.00	0.00
BETHEL-CHURCH-DOWN	STREAM-ANA	100yr-2hr	2.00	142.22	155.00	0.0003	142182	1.27	8.37	0.00	0.00
BETHEL-CHURCH-DOWN	STREAM-ANA	100yr-4hr	4.00	142.54	155.00	0.0006	145259	3.00	17.59	0.00	0.00
BETHEL-CHURCH-DOWN	STREAM-ANA	100yr-8hr	8.00	143.05	155.00	0.0007	150001	4.03	24.82	0.00	0.00
BETHEL-CHURCH-DOWN	STREAM-ANA	10yr-1hr	0.00	142.00	155.00	0.0000	140135	0.00	0.00	0.00	0.00
BETHEL-CHURCH-DOWN	STREAM-ANA	10yr-24hr	24.00	142.64	155.00	0.0002	146132	15.03	2.85	0.00	0.00
BETHEL-CHURCH-DOWN	STREAM-ANA	10yr-2hr	2.00	142.02	155.00	0.0001	140300	1.83	1.21	0.00	0.00
BETHEL-CHURCH-DOWN	STREAM-ANA	10yr-4hr	4.00	142.11	155.00	0.0002	141150	3.03	4.79	0.00	0.00
BETHEL-CHURCH-DOWN	STREAM-ANA	10yr-8hr	8.00	142.31	155.00	0.0003	143098	5.00	5.58	0.00	0.00
BETHEL-CHURCH-DOWN	STREAM-ANA	25yr-1hr	1.80	142.00	155.00	0.0000	140177	0.90	0.56	0.00	0.00
BETHEL-CHURCH-DOWN	STREAM-ANA	25yr-24hr	24.00	142.93	155.00	0.0003	148907	15.03	4.15	0.00	0.00
BETHEL-CHURCH-DOWN	STREAM-ANA	25yr-2hr	2.00	142.06	155.00	0.0002	140742	1.63	3.13	0.00	0.00
BETHEL-CHURCH-DOWN	STREAM-ANA	25yr-4hr	4.00	142.25	155.00	0.0003	142510	3.03	9.53	0.00	0.00
BETHEL-CHURCH-DOWN	STREAM-ANA	25yr-8hr	8.00	142.60	155.00	0.0005	145798	4.07	12.69	0.00	0.00
BETHEL-CHURCH-DOWN	STREAM-ANA	2yr-1hr	0.00	142.00	155.00	0.0000	140135	0.00	0.00	0.00	0.00
BETHEL-CHURCH-DOWN	STREAM-ANA	2yr-24hr	24.00	142.08	155.00	0.0001	140844	19.03	0.53	0.00	0.00
BETHEL-CHURCH-DOWN	STREAM-ANA	2yr-2hr	0.00	142.00	155.00	0.0000	140135	0.00	0.00	0.00	0.00
BETHEL-CHURCH-DOWN	STREAM-ANA	2yr-4hr	4.00	142.00	155.00	0.0000	140138	4.00	0.04	0.00	0.00

Name	Group	Simulation	Max Time Stage hrs	Max Stage ft	Warning Stage ft	Max Delta Stage ft	Max Surf Area ft2	Max Time Inflow hrs	Max Inflow cfs	Max Time Outflow hrs	Max Outflow cfs
BETHEL-CHURCH-DOWN-STREAM-ANA		2yr-8hr	8.00	142.03	155.00	0.0001	140400	7.00	0.48	0.00	0.00
BETHEL-CHURCH-DOWN-STREAM-ANA		50yr-1hr	1.80	142.02	155.00	0.0001	140297	0.87	2.16	0.00	0.00
BETHEL-CHURCH-DOWN-STREAM-ANA		50yr-24hr	24.00	143.29	155.00	0.0004	152338	15.00	5.72	0.00	0.00
BETHEL-CHURCH-DOWN-STREAM-ANA		50yr-2hr	2.00	142.12	155.00	0.0002	141302	1.47	5.23	0.00	0.00
BETHEL-CHURCH-DOWN-STREAM-ANA		50yr-4hr	4.00	142.35	155.00	0.0004	143468	3.00	12.47	0.00	0.00
BETHEL-CHURCH-DOWN-STREAM-ANA		50yr-8hr	8.00	142.77	155.00	0.0007	147382	4.03	17.27	0.00	0.00
BETHEL-CHURCH-DOWN-STREAM-ANA		5yr-1hr	0.00	142.00	155.00	0.0000	140135	0.00	0.00	0.00	0.00
BETHEL-CHURCH-DOWN-STREAM-ANA		5yr-24hr	24.00	142.36	155.00	0.0002	143554	19.00	1.83	0.00	0.00
BETHEL-CHURCH-DOWN-STREAM-ANA		5yr-2hr	2.00	142.00	155.00	0.0000	140144	2.00	0.19	0.00	0.00
BETHEL-CHURCH-DOWN-STREAM-ANA		5yr-4hr	4.00	142.04	155.00	0.0001	140539	3.07	2.11	0.00	0.00
BETHEL-CHURCH-DOWN-STREAM-ANA		5yr-8hr	8.00	142.18	155.00	0.0002	141865	5.03	3.46	0.00	0.00
CONFLUENCEDOWN-STREAM-ANA		100yr-1hr	0.99	104.59	107.50	0.0020	27750	0.85	22.58	0.99	19.45
CONFLUENCEDOWN-STREAM-ANA		100yr-24hr	12.89	104.78	107.50	0.0009	48024	16.13	50.46	16.18	50.43
CONFLUENCEDOWN-STREAM-ANA		100yr-2hr	1.90	104.70	107.50	0.0014	37399	2.00	30.25	1.90	36.36
CONFLUENCEDOWN-STREAM-ANA		100yr-4hr	3.28	104.91	107.50	-0.0013	56751	3.34	62.84	3.44	71.16
CONFLUENCEDOWN-STREAM-ANA		100yr-8hr	4.31	104.94	107.50	-0.0026	49159	5.19	75.97	5.62	86.30
CONFLUENCEDOWN-STREAM-ANA		10yr-1hr	1.05	104.44	107.50	0.0019	21075	0.89	13.48	0.91	12.45
CONFLUENCEDOWN-STREAM-ANA		10yr-24hr	19.47	104.61	107.50	-0.0016	39330	19.22	23.64	19.47	29.50
CONFLUENCEDOWN-STREAM-ANA		10yr-2hr	1.21	104.45	107.50	0.0014	21359	1.04	12.89	1.02	11.57
CONFLUENCEDOWN-STREAM-ANA		10yr-4hr	3.92	104.48	107.50	0.0010	25922	3.77	13.20	3.92	13.09
CONFLUENCEDOWN-STREAM-ANA		10yr-8hr	5.70	104.63	107.50	-0.0016	33118	5.47	22.18	5.73	29.48
CONFLUENCEDOWN-STREAM-ANA		25yr-1hr	1.02	104.51	107.50	0.0020	23892	0.87	17.13	0.86	15.06
CONFLUENCEDOWN-STREAM-ANA		25yr-24hr	15.61	104.68	107.50	-0.0011	42614	19.18	31.63	15.36	34.45
CONFLUENCEDOWN-STREAM-ANA		25yr-2hr	1.18	104.50	107.50	0.0014	23789	1.02	15.98	1.18	14.29
CONFLUENCEDOWN-STREAM-ANA		25yr-4hr	3.50	104.71	107.50	-0.0014	37119	3.60	29.81	3.50	37.77
CONFLUENCEDOWN-STREAM-ANA		25yr-8hr	5.31	104.83	107.50	-0.0015	51062	5.29	44.44	5.55	49.92
CONFLUENCEDOWN-STREAM-ANA		2yr-1hr	1.03	104.31	107.50	-0.0029	15364	0.94	7.41	1.03	6.96
CONFLUENCEDOWN-STREAM-ANA		2yr-24hr	21.56	104.26	107.50	0.0003	15219	21.44	4.50	21.56	4.49
CONFLUENCEDOWN-STREAM-ANA		2yr-2hr	1.37	104.33	107.50	0.0013	16132	1.11	7.61	1.20	7.33
CONFLUENCEDOWN-STREAM-ANA		2yr-4hr	2.81	104.32	107.50	0.0009	15511	2.62	6.04	2.59	6.18
CONFLUENCEDOWN-STREAM-ANA		2yr-8hr	4.26	104.34	107.50	0.0007	16344	4.13	6.85	4.26	6.43
CONFLUENCEDOWN-STREAM-ANA		50yr-1hr	1.00	104.54	107.50	0.0017	25467	0.86	19.40	0.83	16.52
CONFLUENCEDOWN-STREAM-ANA		50yr-24hr	14.04	104.71	107.50	-0.0015	44539	19.15	39.41	19.25	39.52
CONFLUENCEDOWN-STREAM-ANA		50yr-2hr	1.16	104.55	107.50	0.0016	25770	1.00	18.65	1.16	16.83
CONFLUENCEDOWN-STREAM-ANA		50yr-4hr	3.63	104.81	107.50	-0.0014	49175	3.50	41.24	3.45	47.11
CONFLUENCEDOWN-STREAM-ANA		50yr-8hr	4.94	104.86	107.50	0.0009	53368	5.19	56.41	5.20	62.50
CONFLUENCEDOWN-STREAM-ANA		5yr-1hr	1.09	104.39	107.50	-0.0028	18582	0.91	10.68	0.98	10.10
CONFLUENCEDOWN-STREAM-ANA		5yr-24hr	19.46	104.52	107.50	0.0007	27794	19.32	15.01	19.46	14.97
CONFLUENCEDOWN-STREAM-ANA		5yr-2hr	1.26	104.40	107.50	0.0013	19158	1.07	10.42	1.10	9.85
CONFLUENCEDOWN-STREAM-ANA		5yr-4hr	2.68	104.38	107.50	0.0010	18233	2.59	8.24	2.68	8.14
CONFLUENCEDOWN-STREAM-ANA		5yr-8hr	7.33	104.50	107.50	0.0008	27044	7.22	14.08	7.33	14.03
D-3DOWN-STREAM-ANA		100yr-1hr	2.00	117.41	126.00	0.0035	73956	1.00	43.36	2.00	3.60
D-3DOWN-STREAM-ANA		100yr-24hr	21.31	120.79	126.00	0.0026	212263	12.17	38.83	21.31	19.02
D-3DOWN-STREAM-ANA		100yr-2hr	2.00	118.35	126.00	0.0039	112417	1.27	56.56	2.00	9.42
D-3DOWN-STREAM-ANA		100yr-4hr	4.00	119.79	126.00	0.0035	171333	3.07	83.52	4.00	15.80
D-3DOWN-STREAM-ANA		100yr-8hr	7.68	120.77	126.00	0.0039	211419	4.20	99.84	7.68	18.95
D-3DOWN-STREAM-ANA		10yr-1hr	2.00	115.89	126.00	0.0030	37465	1.07	10.41	2.00	0.00
D-3DOWN-STREAM-ANA		10yr-24hr	19.86	118.67	126.00	0.0027	125433	15.13	16.35	19.86	11.59
D-3DOWN-STREAM-ANA		10yr-2hr	2.00	116.64	126.00	0.0031	50728	1.70	18.00	2.00	0.74
D-3DOWN-STREAM-ANA		10yr-4hr	4.00	117.91	126.00	0.0032	94284	3.13	33.55	4.00	6.46
D-3DOWN-STREAM-ANA		10yr-8hr	7.39	118.64	126.00	0.0033	124117	4.27	38.00	7.39	11.37
D-3DOWN-STREAM-ANA		25yr-1hr	2.00	116.56	126.00	0.0031	49264	1.00	21.85	2.00	0.56
D-3DOWN-STREAM-ANA		25yr-24hr	19.90	119.18	126.00	0.0026	146374	12.20	21.65	20.07	14.44
D-3DOWN-STREAM-ANA		25yr-2hr	2.00	117.34	126.00	0.0032	70885	1.53	28.94	2.00	3.23

Name	Group	Simulation	Max Time Stage hrs	Max Stage ft	Warning Stage ft	Max Delta Stage ft	Max Surf Area ft2	Max Time Inflow hrs	Max Inflow cfs	Max Time Outflow hrs	Max Outflow cfs
D-3DOWN	STREAM-ANA	25yr-4hr	4.00	118.70	126.00	0.0035	126802	3.10	52.30	4.00	11.81
D-3DOWN	STREAM-ANA	25yr-8hr	7.48	119.58	126.00	0.0036	162533	4.20	63.24	7.48	15.07
D-3DOWN	STREAM-ANA	2yr-1hr	2.00	115.02	126.00	0.0002	22321	1.20	0.17	0.00	0.00
D-3DOWN	STREAM-ANA	2yr-24hr	22.05	117.31	126.00	0.0014	69795	19.07	4.91	22.05	3.11
D-3DOWN	STREAM-ANA	2yr-2hr	2.00	115.37	126.00	0.0019	28475	1.97	4.31	0.00	0.00
D-3DOWN	STREAM-ANA	2yr-4hr	4.00	116.16	126.00	0.0029	42299	3.20	9.19	4.00	0.07
D-3DOWN	STREAM-ANA	2yr-8hr	8.00	117.11	126.00	0.0028	61675	5.13	10.67	8.00	2.24
D-3DOWN	STREAM-ANA	50yr-1hr	2.00	116.95	126.00	0.0032	56066	1.00	30.37	2.00	1.61
D-3DOWN	STREAM-ANA	50yr-24hr	21.21	119.94	126.00	0.0023	177285	12.17	29.24	21.21	16.29
D-3DOWN	STREAM-ANA	50yr-2hr	2.00	117.83	126.00	0.0039	90847	1.37	40.35	2.00	5.94
D-3DOWN	STREAM-ANA	50yr-4hr	4.00	119.12	126.00	0.0038	143883	3.07	63.83	4.00	14.19
D-3DOWN	STREAM-ANA	50yr-8hr	7.55	120.06	126.00	0.0036	182456	4.20	77.32	7.55	16.71
D-3DOWN	STREAM-ANA	5yr-1hr	2.00	115.39	126.00	0.0028	28887	1.07	4.10	0.00	0.00
D-3DOWN	STREAM-ANA	5yr-24hr	21.14	118.16	126.00	0.0023	104370	15.13	11.34	21.14	8.08
D-3DOWN	STREAM-ANA	5yr-2hr	2.00	116.03	126.00	0.0030	40009	1.80	10.77	2.00	0.02
D-3DOWN	STREAM-ANA	5yr-4hr	4.00	117.31	126.00	0.0031	69548	3.13	22.57	4.00	3.08
D-3DOWN	STREAM-ANA	5yr-8hr	7.60	118.13	126.00	0.0032	103531	4.27	25.48	7.60	7.94
E-SITEDOWN	STREAM-ANA	100yr-1hr	0.60	126.46	131.00	0.0050	113	0.60	35.97	0.60	35.97
E-SITEDOWN	STREAM-ANA	100yr-24hr	12.00	126.21	131.00	0.0050	113	12.00	5.99	12.00	5.99
E-SITEDOWN	STREAM-ANA	100yr-2hr	0.80	126.44	131.00	-0.0134	113	0.80	32.16	0.80	32.15
E-SITEDOWN	STREAM-ANA	100yr-4hr	2.00	126.33	131.00	-0.0075	113	2.00	17.66	2.00	17.65
E-SITEDOWN	STREAM-ANA	100yr-8hr	4.00	126.34	131.00	0.0050	113	4.00	19.72	4.00	19.72
E-SITEDOWN	STREAM-ANA	10yr-1hr	0.60	126.38	131.00	0.0050	113	0.60	24.00	0.60	24.00
E-SITEDOWN	STREAM-ANA	10yr-24hr	11.99	126.18	131.00	0.0050	113	12.00	3.74	11.99	3.74
E-SITEDOWN	STREAM-ANA	10yr-2hr	0.80	126.36	131.00	0.0050	113	0.80	21.14	0.80	21.14
E-SITEDOWN	STREAM-ANA	10yr-4hr	2.00	126.27	131.00	0.0050	113	2.00	11.31	2.00	11.30
E-SITEDOWN	STREAM-ANA	10yr-8hr	4.00	126.28	131.00	-0.0050	113	4.00	12.64	4.00	12.64
E-SITEDOWN	STREAM-ANA	25yr-1hr	0.60	126.41	131.00	0.0050	113	0.60	28.97	0.60	28.94
E-SITEDOWN	STREAM-ANA	25yr-24hr	12.05	126.19	131.00	0.0050	113	12.00	4.39	12.05	4.46
E-SITEDOWN	STREAM-ANA	25yr-2hr	0.80	126.39	131.00	0.0050	113	0.80	25.00	0.80	25.00
E-SITEDOWN	STREAM-ANA	25yr-4hr	2.00	126.29	131.00	0.0050	113	2.00	13.84	2.00	13.84
E-SITEDOWN	STREAM-ANA	25yr-8hr	4.00	126.31	131.00	0.0050	113	4.00	15.74	4.00	15.74
E-SITEDOWN	STREAM-ANA	2yr-1hr	0.60	126.31	131.00	0.0050	113	0.60	15.16	0.60	15.16
E-SITEDOWN	STREAM-ANA	2yr-24hr	12.00	126.15	131.00	0.0050	113	12.00	2.02	12.00	2.02
E-SITEDOWN	STREAM-ANA	2yr-2hr	0.80	126.30	131.00	0.0050	113	0.80	14.11	0.80	14.10
E-SITEDOWN	STREAM-ANA	2yr-4hr	2.04	126.23	131.00	0.0050	113	2.00	7.21	2.04	7.27
E-SITEDOWN	STREAM-ANA	2yr-8hr	4.00	126.23	131.00	0.0050	113	4.00	7.76	4.00	7.76
E-SITEDOWN	STREAM-ANA	50yr-1hr	0.59	126.44	131.00	0.0050	113	0.60	31.96	0.59	31.93
E-SITEDOWN	STREAM-ANA	50yr-24hr	12.03	126.20	131.00	0.0050	113	12.00	5.11	12.03	5.16
E-SITEDOWN	STREAM-ANA	50yr-2hr	0.80	126.41	131.00	-0.0116	113	0.80	28.24	0.80	28.22
E-SITEDOWN	STREAM-ANA	50yr-4hr	2.00	126.31	131.00	0.0050	113	2.00	15.29	2.00	15.28
E-SITEDOWN	STREAM-ANA	50yr-8hr	4.00	126.32	131.00	0.0050	113	4.00	17.32	4.00	17.32
E-SITEDOWN	STREAM-ANA	5yr-1hr	0.60	126.35	131.00	0.0050	113	0.60	20.05	0.60	20.02
E-SITEDOWN	STREAM-ANA	5yr-24hr	11.99	126.17	131.00	0.0050	113	12.00	3.04	11.99	3.03
E-SITEDOWN	STREAM-ANA	5yr-2hr	0.80	126.33	131.00	0.0050	113	0.80	17.93	0.80	17.89
E-SITEDOWN	STREAM-ANA	5yr-4hr	2.00	126.25	131.00	0.0050	113	2.00	9.66	2.00	9.66
E-SITEDOWN	STREAM-ANA	5yr-8hr	4.00	126.27	131.00	0.0050	113	4.00	10.88	4.00	10.88
POA-BARINEAUDOWN	STREAM-ANA	100yr-1hr	0.00	92.00	95.00	0.0000	5	1.26	14.21	0.00	0.00
POA-BARINEAUDOWN	STREAM-ANA	100yr-24hr	0.00	92.00	95.00	0.0000	5	16.32	55.92	0.00	0.00
POA-BARINEAUDOWN	STREAM-ANA	100yr-2hr	0.00	92.00	95.00	0.0000	5	2.00	27.15	0.00	0.00
POA-BARINEAUDOWN	STREAM-ANA	100yr-4hr	0.00	92.00	95.00	0.0000	5	3.80	62.31	0.00	0.00
POA-BARINEAUDOWN	STREAM-ANA	100yr-8hr	0.00	92.00	95.00	0.0000	5	5.59	75.79	0.00	0.00
POA-BARINEAUDOWN	STREAM-ANA	10yr-1hr	0.00	92.00	95.00	0.0000	5	1.26	8.65	0.00	0.00
POA-BARINEAUDOWN	STREAM-ANA	10yr-24hr	0.00	92.00	95.00	0.0000	5	19.68	25.03	0.00	0.00

Name	Group	Simulation	Max Time Stage hrs	Max Stage ft	Warning Stage ft	Max Delta Stage ft	Max Surf Area ft2	Max Time Inflow hrs	Max Inflow cfs	Max Time Outflow hrs	Max Outflow cfs
POA-BARINEAUDOWN-STREAM-ANA		10yr-2hr	0.00	92.00	95.00	0.0000	5	1.47	9.41	0.00	0.00
POA-BARINEAUDOWN-STREAM-ANA		10yr-4hr	0.00	92.00	95.00	0.0000	5	4.00	12.91	0.00	0.00
POA-BARINEAUDOWN-STREAM-ANA		10yr-8hr	0.00	92.00	95.00	0.0000	5	6.50	23.31	0.00	0.00
POA-BARINEAUDOWN-STREAM-ANA		25yr-1hr	0.00	92.00	95.00	0.0000	5	1.24	10.78	0.00	0.00
POA-BARINEAUDOWN-STREAM-ANA		25yr-24hr	0.00	92.00	95.00	0.0000	5	19.50	34.28	0.00	0.00
POA-BARINEAUDOWN-STREAM-ANA		25yr-2hr	0.00	92.00	95.00	0.0000	5	1.46	11.49	0.00	0.00
POA-BARINEAUDOWN-STREAM-ANA		25yr-4hr	0.00	92.00	95.00	0.0000	5	4.00	29.62	0.00	0.00
POA-BARINEAUDOWN-STREAM-ANA		25yr-8hr	0.00	92.00	95.00	0.0000	5	5.78	47.15	0.00	0.00
POA-BARINEAUDOWN-STREAM-ANA		2yr-1hr	0.00	92.00	95.00	0.0000	5	1.19	5.15	0.00	0.00
POA-BARINEAUDOWN-STREAM-ANA		2yr-24hr	0.00	92.00	95.00	0.0000	5	21.88	4.49	0.00	0.00
POA-BARINEAUDOWN-STREAM-ANA		2yr-2hr	0.00	92.00	95.00	0.0000	5	1.53	5.77	0.00	0.00
POA-BARINEAUDOWN-STREAM-ANA		2yr-4hr	0.00	92.00	95.00	0.0000	5	2.98	5.52	0.00	0.00
POA-BARINEAUDOWN-STREAM-ANA		2yr-8hr	0.00	92.00	95.00	0.0000	5	4.42	5.96	0.00	0.00
POA-BARINEAUDOWN-STREAM-ANA		50yr-1hr	0.00	92.00	95.00	0.0000	5	1.24	12.10	0.00	0.00
POA-BARINEAUDOWN-STREAM-ANA		50yr-24hr	0.00	92.00	95.00	0.0000	5	19.38	43.12	0.00	0.00
POA-BARINEAUDOWN-STREAM-ANA		50yr-2hr	0.00	92.00	95.00	0.0000	5	2.00	15.60	0.00	0.00
POA-BARINEAUDOWN-STREAM-ANA		50yr-4hr	0.00	92.00	95.00	0.0000	5	4.00	42.87	0.00	0.00
POA-BARINEAUDOWN-STREAM-ANA		50yr-8hr	0.00	92.00	95.00	0.0000	5	5.59	58.17	0.00	0.00
POA-BARINEAUDOWN-STREAM-ANA		5yr-1hr	0.00	92.00	95.00	0.0000	5	1.27	7.00	0.00	0.00
POA-BARINEAUDOWN-STREAM-ANA		5yr-24hr	0.00	92.00	95.00	0.0000	5	19.77	15.75	0.00	0.00
POA-BARINEAUDOWN-STREAM-ANA		5yr-2hr	0.00	92.00	95.00	0.0000	5	1.50	7.73	0.00	0.00
POA-BARINEAUDOWN-STREAM-ANA		5yr-4hr	0.00	92.00	95.00	0.0000	5	2.90	7.68	0.00	0.00
POA-BARINEAUDOWN-STREAM-ANA		5yr-8hr	0.00	92.00	95.00	0.0000	5	7.52	14.51	0.00	0.00
RAILROAD-1DOWN-STREAM-ANA		100yr-1hr	2.00	115.18	125.00	0.0004	7255	2.00	3.60	2.00	3.56
RAILROAD-1DOWN-STREAM-ANA		100yr-24hr	21.37	115.40	125.00	0.0006	18078	21.31	19.02	21.37	19.02
RAILROAD-1DOWN-STREAM-ANA		100yr-2hr	2.00	115.26	125.00	0.0005	10630	2.00	9.42	2.00	9.16
RAILROAD-1DOWN-STREAM-ANA		100yr-4hr	4.00	115.36	125.00	0.0006	16449	4.00	15.80	4.00	15.72
RAILROAD-1DOWN-STREAM-ANA		100yr-8hr	7.74	115.40	125.00	0.0006	18046	7.68	18.95	7.74	18.95
RAILROAD-1DOWN-STREAM-ANA		10yr-1hr	2.00	115.00	125.00	0.0000	115	2.00	0.00	0.00	0.00
RAILROAD-1DOWN-STREAM-ANA		10yr-24hr	19.91	115.31	125.00	-0.0019	14159	19.86	11.59	19.91	11.59
RAILROAD-1DOWN-STREAM-ANA		10yr-2hr	2.00	115.09	125.00	0.0004	3583	2.00	0.74	2.00	0.59
RAILROAD-1DOWN-STREAM-ANA		10yr-4hr	4.00	115.23	125.00	0.0004	9174	4.00	6.46	4.00	6.38
RAILROAD-1DOWN-STREAM-ANA		10yr-8hr	7.45	115.31	125.00	0.0011	14026	7.39	11.37	7.45	11.37
RAILROAD-1DOWN-STREAM-ANA		25yr-1hr	2.00	115.08	125.00	0.0005	3437	2.00	0.56	2.00	0.53
RAILROAD-1DOWN-STREAM-ANA		25yr-24hr	20.12	115.35	125.00	0.0011	15777	20.07	14.44	20.12	14.43
RAILROAD-1DOWN-STREAM-ANA		25yr-2hr	2.00	115.17	125.00	0.0004	6771	2.00	3.23	2.00	2.99
RAILROAD-1DOWN-STREAM-ANA		25yr-4hr	4.00	115.31	125.00	0.0012	14200	4.00	11.81	4.00	11.66
RAILROAD-1DOWN-STREAM-ANA		25yr-8hr	7.54	115.35	125.00	0.0006	16110	7.48	15.07	7.54	15.07
RAILROAD-1DOWN-STREAM-ANA		2yr-1hr	0.00	115.00	125.00	0.0000	117	0.00	0.00	0.00	0.00
RAILROAD-1DOWN-STREAM-ANA		2yr-24hr	22.08	115.17	125.00	0.0002	6871	22.05	3.11	22.08	3.11
RAILROAD-1DOWN-STREAM-ANA		2yr-2hr	0.00	115.00	125.00	0.0000	117	0.00	0.00	0.00	0.00
RAILROAD-1DOWN-STREAM-ANA		2yr-4hr	4.00	115.03	125.00	0.0004	1352	4.00	0.07	4.00	0.04
RAILROAD-1DOWN-STREAM-ANA		2yr-8hr	8.00	115.15	125.00	0.0004	6012	8.00	2.24	8.00	2.22
RAILROAD-1DOWN-STREAM-ANA		50yr-1hr	2.00	115.13	125.00	0.0005	5240	2.00	1.61	2.00	1.57
RAILROAD-1DOWN-STREAM-ANA		50yr-24hr	21.26	115.37	125.00	0.0011	16740	21.21	16.29	21.26	16.29
RAILROAD-1DOWN-STREAM-ANA		50yr-2hr	2.00	115.22	125.00	0.0005	8755	2.00	5.94	2.00	5.68
RAILROAD-1DOWN-STREAM-ANA		50yr-4hr	4.00	115.34	125.00	0.0009	15594	4.00	14.19	4.00	14.10
RAILROAD-1DOWN-STREAM-ANA		50yr-8hr	7.61	115.37	125.00	0.0007	16953	7.55	16.71	7.61	16.71
RAILROAD-1DOWN-STREAM-ANA		5yr-1hr	0.00	115.00	125.00	0.0000	117	0.00	0.00	0.00	0.00
RAILROAD-1DOWN-STREAM-ANA		5yr-24hr	21.17	115.25	125.00	0.0003	10101	21.14	8.08	21.17	8.08
RAILROAD-1DOWN-STREAM-ANA		5yr-2hr	2.00	115.01	125.00	0.0002	461	2.00	0.02	2.00	0.00
RAILROAD-1DOWN-STREAM-ANA		5yr-4hr	4.00	115.17	125.00	0.0004	6764	4.00	3.08	4.00	2.99
RAILROAD-1DOWN-STREAM-ANA		5yr-8hr	7.63	115.25	125.00	0.0004	10030	7.60	7.94	7.63	7.94
TRANS RDDOWN-STREAM-ANA		100yr-1hr	0.85	110.19	112.00	0.0008	33707	0.80	23.09	0.85	22.58

Name	Group	Simulation	Max Time Stage hrs	Max Stage ft	Warning Stage ft	Max Delta Stage ft	Max Surf Area ft2	Max Time Inflow hrs	Max Inflow cfs	Max Time Outflow hrs	Max Outflow cfs
TRANS	RDDOWN-STREAM-ANA	100yr-24hr	15.30	110.23	112.00	-0.0002	34026	15.27	30.44	15.30	30.43
TRANS	RDDOWN-STREAM-ANA	100yr-2hr	1.00	110.19	112.00	0.0005	33604	0.94	22.59	1.00	22.15
TRANS	RDDOWN-STREAM-ANA	100yr-4hr	3.29	110.28	112.00	0.0003	35840	3.23	44.22	3.29	44.13
TRANS	RDDOWN-STREAM-ANA	100yr-8hr	5.17	110.31	112.00	0.0003	36984	5.14	53.70	5.17	53.64
TRANS	RDDOWN-STREAM-ANA	10yr-1hr	0.89	110.14	112.00	0.0007	31921	0.83	13.94	0.89	13.48
TRANS	RDDOWN-STREAM-ANA	10yr-24hr	19.19	110.12	112.00	-0.0002	30977	19.15	11.03	19.19	11.02
TRANS	RDDOWN-STREAM-ANA	10yr-2hr	1.04	110.13	112.00	0.0005	31797	0.96	13.24	1.04	12.89
TRANS	RDDOWN-STREAM-ANA	10yr-4hr	2.59	110.11	112.00	0.0002	31101	2.56	9.78	2.59	9.76
TRANS	RDDOWN-STREAM-ANA	10yr-8hr	5.28	110.13	112.00	0.0002	31387	5.20	13.09	5.28	13.04
TRANS	RDDOWN-STREAM-ANA	25yr-1hr	0.87	110.16	112.00	0.0008	32672	0.81	17.62	0.87	17.13
TRANS	RDDOWN-STREAM-ANA	25yr-24hr	19.17	110.15	112.00	-0.0002	31769	19.13	15.53	19.17	15.52
TRANS	RDDOWN-STREAM-ANA	25yr-2hr	1.02	110.15	112.00	0.0005	32440	0.95	16.39	1.02	15.98
TRANS	RDDOWN-STREAM-ANA	25yr-4hr	3.34	110.17	112.00	0.0003	32447	3.29	19.32	3.34	19.28
TRANS	RDDOWN-STREAM-ANA	25yr-8hr	5.23	110.22	112.00	0.0002	33750	5.18	28.35	5.23	28.28
TRANS	RDDOWN-STREAM-ANA	2yr-1hr	0.94	110.09	112.00	-0.0008	30543	0.86	7.81	0.94	7.41
TRANS	RDDOWN-STREAM-ANA	2yr-24hr	12.16	110.04	112.00	-0.0001	28970	12.09	1.91	12.16	1.89
TRANS	RDDOWN-STREAM-ANA	2yr-2hr	1.11	110.10	112.00	0.0004	30594	1.02	7.85	1.11	7.61
TRANS	RDDOWN-STREAM-ANA	2yr-4hr	2.62	110.08	112.00	0.0002	30199	2.57	6.08	2.62	6.04
TRANS	RDDOWN-STREAM-ANA	2yr-8hr	4.13	110.09	112.00	0.0002	30405	4.07	6.95	4.13	6.85
TRANS	RDDOWN-STREAM-ANA	50yr-1hr	0.86	110.17	112.00	0.0007	33115	0.80	19.90	0.86	19.40
TRANS	RDDOWN-STREAM-ANA	50yr-24hr	15.39	110.18	112.00	-0.0002	32751	15.33	21.60	15.39	21.59
TRANS	RDDOWN-STREAM-ANA	50yr-2hr	1.00	110.17	112.00	0.0006	32968	0.94	19.10	1.00	18.65
TRANS	RDDOWN-STREAM-ANA	50yr-4hr	3.33	110.21	112.00	0.0003	33684	3.29	27.75	3.33	27.70
TRANS	RDDOWN-STREAM-ANA	50yr-8hr	5.20	110.26	112.00	0.0002	35019	5.17	37.77	5.20	37.70
TRANS	RDDOWN-STREAM-ANA	5yr-1hr	0.91	110.12	112.00	-0.0008	31313	0.84	11.13	0.91	10.68
TRANS	RDDOWN-STREAM-ANA	5yr-24hr	19.25	110.09	112.00	-0.0001	30089	19.17	6.58	19.25	6.56
TRANS	RDDOWN-STREAM-ANA	5yr-2hr	1.07	110.12	112.00	0.0004	31255	0.99	10.72	1.07	10.42
TRANS	RDDOWN-STREAM-ANA	5yr-4hr	2.59	110.10	112.00	0.0002	30747	2.56	8.27	2.59	8.24
TRANS	RDDOWN-STREAM-ANA	5yr-8hr	4.11	110.11	112.00	0.0002	31129	4.06	9.98	4.11	9.87

Downstream Analysis Post-Development Output

HOPKINS ELECTRIC PLANT-POST
DOWNSTREAM ANALYSIS- OUTPUT-CONDENSED
MBC Job # R83.001
Date: Mar. 28, 2017

Name	Simulation	Max Stage ft	Warning Stage ft	Max Delta Stage ft	Max Surf Area ft2	Max Inflow cfs	Max Outflow cfs
B-2	100yr-1hr	120.12	125.00	-0.0003	46156	3.81	2.45
B-2	100yr-24hr	120.45	125.00	-0.0014	53218	19.10	18.94
B-2	100yr-2hr	120.36	125.00	0.0006	51308	14.79	13.15
B-2	100yr-4hr	120.61	125.00	-0.0035	56714	32.27	29.93
B-2	100yr-8hr	120.66	125.00	-0.0027	57949	35.21	34.59
B-2	10yr-1hr	120.04	125.00	0.0002	44562	0.70	0.55
B-2	10yr-24hr	120.24	125.00	-0.0011	48623	7.15	7.08
B-2	10yr-2hr	120.05	125.00	0.0001	44782	1.38	0.73
B-2	10yr-4hr	120.20	125.00	0.0004	47822	5.95	5.30
B-2	10yr-8hr	120.28	125.00	-0.0008	49658	10.08	9.20
B-2	25yr-1hr	120.05	125.00	0.0001	44625	0.76	0.61
B-2	25yr-24hr	120.30	125.00	-0.0019	49903	9.98	9.94
B-2	25yr-2hr	120.13	125.00	0.0004	46528	4.73	2.95
B-2	25yr-4hr	120.36	125.00	-0.0021	51305	14.63	13.24
B-2	25yr-8hr	120.46	125.00	-0.0013	53462	20.29	19.39
B-2	2yr-1hr	120.04	125.00	0.0004	44416	0.58	0.43
B-2	2yr-24hr	120.07	125.00	0.0001	45038	1.06	1.05
B-2	2yr-2hr	120.04	125.00	0.0002	44460	0.66	0.46
B-2	2yr-4hr	120.05	125.00	0.0001	44678	0.72	0.66
B-2	2yr-8hr	120.06	125.00	0.0001	44788	0.78	0.77
B-2	50yr-1hr	120.07	125.00	0.0001	45035	1.54	1.02
B-2	50yr-24hr	120.37	125.00	-0.0024	51428	13.97	13.82
B-2	50yr-2hr	120.23	125.00	0.0005	48654	8.83	6.86
B-2	50yr-4hr	120.45	125.00	0.0007	53338	20.88	18.94
B-2	50yr-8hr	120.54	125.00	-0.0010	55279	25.97	25.16
B-2	5yr-1hr	120.04	125.00	0.0003	44502	0.65	0.50
B-2	5yr-24hr	120.18	125.00	-0.0009	47309	4.53	4.45
B-2	5yr-2hr	120.04	125.00	0.0001	44543	0.74	0.53
B-2	5yr-4hr	120.10	125.00	0.0002	45731	2.23	1.86
B-2	5yr-8hr	120.19	125.00	-0.0016	47533	5.21	4.79
B-3	100yr-1hr	124.02	130.00	0.0001	65894	3.67	3.54
B-3	100yr-24hr	124.03	130.00	0.0001	66032	6.01	6.00
B-3	100yr-2hr	124.03	130.00	0.0001	66127	7.90	7.88
B-3	100yr-4hr	124.05	130.00	0.0001	66401	14.05	14.04
B-3	100yr-8hr	124.05	130.00	0.0001	66546	17.99	17.69
B-3	10yr-1hr	124.01	130.00	0.0000	65684	0.71	0.70
B-3	10yr-24hr	124.02	130.00	0.0000	65851	2.86	2.86
B-3	10yr-2hr	124.01	130.00	0.0000	65745	1.50	1.38
B-3	10yr-4hr	124.02	130.00	0.0001	65937	4.29	4.26
B-3	10yr-8hr	124.03	130.00	-0.0001	66011	5.62	5.59
B-3	25yr-1hr	124.01	130.00	0.0000	65690	0.77	0.76
B-3	25yr-24hr	124.02	130.00	0.0001	65894	3.55	3.54
B-3	25yr-2hr	124.02	130.00	0.0000	65907	3.77	3.76
B-3	25yr-4hr	124.03	130.00	0.0001	66126	7.93	7.86
B-3	25yr-8hr	124.03	130.00	0.0001	66154	8.44	8.43
B-3	2yr-1hr	124.01	130.00	0.0000	65671	0.58	0.58
B-3	2yr-24hr	124.01	130.00	0.0000	65686	0.72	0.72
B-3	2yr-2hr	124.01	130.00	0.0000	65680	0.67	0.66
B-3	2yr-4hr	124.01	130.00	0.0000	65686	0.72	0.72
B-3	2yr-8hr	124.01	130.00	0.0000	65690	0.77	0.77
B-3	50yr-1hr	124.01	130.00	0.0000	65757	1.61	1.54
B-3	50yr-24hr	124.02	130.00	0.0001	65951	4.52	4.51
B-3	50yr-2hr	124.03	130.00	0.0000	66012	5.62	5.60
B-3	50yr-4hr	124.04	130.00	0.0001	66245	10.53	10.42
B-3	50yr-8hr	124.04	130.00	0.0001	66303	11.86	11.73
B-3	5yr-1hr	124.01	130.00	0.0000	65679	0.65	0.65
B-3	5yr-24hr	124.01	130.00	0.0000	65777	1.80	1.80
B-3	5yr-2hr	124.01	130.00	0.0000	65687	0.74	0.74
B-3	5yr-4hr	124.01	130.00	0.0000	65797	2.09	2.07
B-3	5yr-8hr	124.02	130.00	-0.0001	65903	3.73	3.69
BARINEAU-RD	100yr-1hr	94.38	102.00	0.0031	10311	6.34	5.18
BARINEAU-RD	100yr-24hr	96.67	102.00	0.0050	49837	57.25	56.94
BARINEAU-RD	100yr-2hr	95.21	102.00	0.0031	25909	29.84	18.95
BARINEAU-RD	100yr-4hr	96.89	102.00	0.0040	53933	82.27	64.13
BARINEAU-RD	100yr-8hr	97.31	102.00	-0.0046	83586	95.97	78.06
BARINEAU-RD	10yr-1hr	93.80	102.00	0.0022	2138	0.43	0.34
BARINEAU-RD	10yr-24hr	95.52	102.00	-0.0050	31782	32.03	25.67
BARINEAU-RD	10yr-2hr	93.82	102.00	0.0010	2606	0.77	0.45
BARINEAU-RD	10yr-4hr	94.80	102.00	0.0031	17767	13.81	11.19
BARINEAU-RD	10yr-8hr	95.48	102.00	0.0045	31170	32.88	24.86
BARINEAU-RD	25yr-1hr	93.88	102.00	0.0029	2811	0.92	0.70
BARINEAU-RD	25yr-24hr	95.89	102.00	0.0050	37469	36.68	34.78
BARINEAU-RD	25yr-2hr	94.19	102.00	0.0027	7942	5.48	3.07
BARINEAU-RD	25yr-4hr	95.70	102.00	0.0050	35761	43.06	29.98
BARINEAU-RD	25yr-8hr	96.40	102.00	-0.0043	45702	58.34	49.02
BARINEAU-RD	2yr-1hr	93.76	102.00	0.0035	1908	0.30	0.22
BARINEAU-RD	2yr-24hr	94.33	102.00	0.0015	8943	4.62	4.61
BARINEAU-RD	2yr-2hr	93.76	102.00	0.0012	1901	0.30	0.20

Name	Simulation	Max Stage ft	Warning Stage ft	Max Delta Stage ft	Max Surf Area ft2	Max Inflow cfs	Max Outflow cfs
BARINEAU-RD	2yr-4hr	93.86	102.00	0.0007	2470	0.64	0.60
BARINEAU-RD	2yr-8hr	94.18	102.00	0.0017	6452	3.07	2.97
BARINEAU-RD	50yr-1hr	94.07	102.00	0.0030	4857	2.39	1.99
BARINEAU-RD	50yr-24hr	96.22	102.00	-0.0050	42404	44.03	43.62
BARINEAU-RD	50yr-2hr	94.61	102.00	0.0030	15680	13.80	8.26
BARINEAU-RD	50yr-4hr	96.20	102.00	0.0045	47336	56.22	43.04
BARINEAU-RD	50yr-8hr	96.77	102.00	0.0041	51748	72.96	60.12
BARINEAU-RD	5yr-1hr	93.78	102.00	0.0031	2045	0.38	0.29
BARINEAU-RD	5yr-24hr	95.07	102.00	0.0030	21270	16.34	16.23
BARINEAU-RD	5yr-2hr	93.78	102.00	0.0007	2037	0.37	0.27
BARINEAU-RD	5yr-4hr	94.26	102.00	0.0028	8374	4.85	3.81
BARINEAU-RD	5yr-8hr	95.04	102.00	0.0030	20732	15.66	15.51
BETHEL-CHURCH-	100yr-1hr	142.05	155.00	0.0001	140570	5.35	0.00
BETHEL-CHURCH-	100yr-24hr	143.77	155.00	0.0026	156789	7.71	0.00
BETHEL-CHURCH-	100yr-2hr	142.22	155.00	0.0003	142182	8.37	0.00
BETHEL-CHURCH-	100yr-4hr	142.54	155.00	0.0005	145260	17.59	0.00
BETHEL-CHURCH-	100yr-8hr	143.05	155.00	0.0011	149999	24.81	0.00
BETHEL-CHURCH-	10yr-1hr	142.00	155.00	0.0000	140135	0.00	0.00
BETHEL-CHURCH-	10yr-24hr	142.64	155.00	0.0012	146132	2.85	0.00
BETHEL-CHURCH-	10yr-2hr	142.02	155.00	0.0001	140300	1.21	0.00
BETHEL-CHURCH-	10yr-4hr	142.11	155.00	0.0002	141150	4.79	0.00
BETHEL-CHURCH-	10yr-8hr	142.31	155.00	0.0010	143097	5.58	0.00
BETHEL-CHURCH-	25yr-1hr	142.00	155.00	0.0000	140177	0.56	0.00
BETHEL-CHURCH-	25yr-24hr	142.93	155.00	0.0016	148906	4.15	0.00
BETHEL-CHURCH-	25yr-2hr	142.06	155.00	0.0002	140742	3.13	0.00
BETHEL-CHURCH-	25yr-4hr	142.25	155.00	0.0003	142510	9.53	0.00
BETHEL-CHURCH-	25yr-8hr	142.60	155.00	0.0013	145796	12.69	0.00
BETHEL-CHURCH-	2yr-1hr	142.00	155.00	0.0000	140135	0.00	0.00
BETHEL-CHURCH-	2yr-24hr	142.08	155.00	0.0002	140844	0.53	0.00
BETHEL-CHURCH-	2yr-2hr	142.00	155.00	0.0000	140135	0.00	0.00
BETHEL-CHURCH-	2yr-4hr	142.00	155.00	0.0000	140138	0.04	0.00
BETHEL-CHURCH-	2yr-8hr	142.03	155.00	0.0001	140400	0.48	0.00
BETHEL-CHURCH-	50yr-1hr	142.02	155.00	0.0001	140297	2.16	0.00
BETHEL-CHURCH-	50yr-24hr	143.29	155.00	0.0020	152337	5.72	0.00
BETHEL-CHURCH-	50yr-2hr	142.12	155.00	0.0002	141302	5.23	0.00
BETHEL-CHURCH-	50yr-4hr	142.35	155.00	0.0004	143467	12.47	0.00
BETHEL-CHURCH-	50yr-8hr	142.77	155.00	0.0012	147379	17.27	0.00
BETHEL-CHURCH-	5yr-1hr	142.00	155.00	0.0000	140135	0.00	0.00
BETHEL-CHURCH-	5yr-24hr	142.36	155.00	0.0008	143554	1.83	0.00
BETHEL-CHURCH-	5yr-2hr	142.00	155.00	0.0000	140144	0.19	0.00
BETHEL-CHURCH-	5yr-4hr	142.04	155.00	0.0001	140539	2.11	0.00
BETHEL-CHURCH-	5yr-8hr	142.18	155.00	0.0007	141863	3.46	0.00
CONFLUENCE	100yr-1hr	104.31	107.50	0.0018	17613	6.18	6.34
CONFLUENCE	100yr-24hr	104.80	107.50	0.0024	49086	51.47	51.45
CONFLUENCE	100yr-2hr	104.70	107.50	0.0017	36384	30.65	27.26
CONFLUENCE	100yr-4hr	104.96	107.50	-0.0018	55962	66.68	75.41
CONFLUENCE	100yr-8hr	105.02	107.50	-0.0049	58468	79.01	88.29
CONFLUENCE	10yr-1hr	104.10	107.50	0.0007	5811	0.50	0.43
CONFLUENCE	10yr-24hr	104.62	107.50	-0.0050	39661	24.13	30.15
CONFLUENCE	10yr-2hr	104.13	107.50	0.0004	8129	1.20	0.77
CONFLUENCE	10yr-4hr	104.49	107.50	0.0017	26294	13.99	13.44
CONFLUENCE	10yr-8hr	104.65	107.50	-0.0041	34293	23.86	31.51
CONFLUENCE	25yr-1hr	104.14	107.50	0.0008	8480	1.08	0.92
CONFLUENCE	25yr-24hr	104.68	107.50	-0.0032	43005	32.12	34.23
CONFLUENCE	25yr-2hr	104.28	107.50	0.0008	16269	6.78	5.42
CONFLUENCE	25yr-4hr	104.74	107.50	-0.0022	38782	31.92	40.90
CONFLUENCE	25yr-8hr	104.84	107.50	-0.0028	52013	47.04	53.76
CONFLUENCE	2yr-1hr	104.09	107.50	0.0019	5251	0.37	0.30
CONFLUENCE	2yr-24hr	104.26	107.50	0.0006	15324	4.59	4.58
CONFLUENCE	2yr-2hr	104.09	107.50	0.0007	5243	0.39	0.30
CONFLUENCE	2yr-4hr	104.12	107.50	0.0003	6968	0.68	0.64
CONFLUENCE	2yr-8hr	104.22	107.50	0.0004	13200	3.12	3.07
CONFLUENCE	50yr-1hr	104.20	107.50	0.0010	11967	2.58	2.39
CONFLUENCE	50yr-24hr	104.72	107.50	0.0025	45013	39.91	40.12
CONFLUENCE	50yr-2hr	104.48	107.50	0.0016	25808	16.13	12.90
CONFLUENCE	50yr-4hr	104.85	107.50	-0.0023	48582	44.04	52.21
CONFLUENCE	50yr-8hr	104.89	107.50	0.0018	51858	58.94	66.28
CONFLUENCE	5yr-1hr	104.10	107.50	0.0013	5585	0.44	0.38
CONFLUENCE	5yr-24hr	104.52	107.50	0.0026	28162	15.46	15.43
CONFLUENCE	5yr-2hr	104.10	107.50	0.0004	5684	0.46	0.37
CONFLUENCE	5yr-4hr	104.27	107.50	0.0007	15613	5.24	4.85
CONFLUENCE	5yr-8hr	104.52	107.50	0.0017	27830	15.04	15.01
D-3	100yr-1hr	117.41	126.00	0.0035	73935	43.35	3.60
D-3	100yr-24hr	120.79	126.00	0.0050	212281	38.83	19.02
D-3	100yr-2hr	118.35	126.00	0.0039	112424	56.56	9.42
D-3	100yr-4hr	119.79	126.00	0.0050	171307	83.52	15.80
D-3	100yr-8hr	120.77	126.00	0.0050	211426	99.84	18.95

Name	Simulation	Max Stage ft	Warning Stage ft	Max Delta Stage ft	Max Surf Area ft2	Max Inflow cfs	Max Outflow cfs
D-3	10yr-1hr	115.88	126.00	0.0030	37459	10.41	0.00
D-3	10yr-24hr	118.67	126.00	0.0050	125445	16.35	11.59
D-3	10yr-2hr	116.64	126.00	0.0031	50732	18.00	0.74
D-3	10yr-4hr	117.91	126.00	0.0042	94277	33.55	6.46
D-3	10yr-8hr	118.64	126.00	0.0050	124124	38.00	11.37
D-3	25yr-1hr	116.56	126.00	0.0034	49257	21.85	0.56
D-3	25yr-24hr	119.18	126.00	0.0050	146389	21.65	14.44
D-3	25yr-2hr	117.34	126.00	0.0031	70846	28.94	3.23
D-3	25yr-4hr	118.70	126.00	0.0050	126759	52.30	11.80
D-3	25yr-8hr	119.58	126.00	0.0050	162539	63.24	15.07
D-3	2yr-1hr	115.02	126.00	0.0003	22321	0.17	0.00
D-3	2yr-24hr	117.31	126.00	0.0043	69809	4.91	3.11
D-3	2yr-2hr	115.37	126.00	0.0030	28461	4.31	0.00
D-3	2yr-4hr	116.16	126.00	0.0036	42302	9.18	0.07
D-3	2yr-8hr	117.11	126.00	0.0034	61641	10.67	2.23
D-3	50yr-1hr	116.95	126.00	0.0035	56073	30.36	1.61
D-3	50yr-24hr	119.94	126.00	0.0050	177303	29.24	16.29
D-3	50yr-2hr	117.83	126.00	0.0031	90863	40.35	5.94
D-3	50yr-4hr	119.12	126.00	0.0047	143871	63.83	14.19
D-3	50yr-8hr	120.06	126.00	0.0050	182463	77.32	16.71
D-3	5yr-1hr	115.39	126.00	0.0030	28882	4.09	0.00
D-3	5yr-24hr	118.16	126.00	0.0050	104380	11.34	8.08
D-3	5yr-2hr	116.03	126.00	0.0031	40020	10.77	0.02
D-3	5yr-4hr	117.31	126.00	0.0041	69517	22.56	3.07
D-3	5yr-8hr	118.14	126.00	0.0050	103540	25.48	7.94
E-SWMF-REDUCED	100yr-1hr	129.46	132.50	0.0050	32223	58.53	3.67
E-SWMF-REDUCED	100yr-24hr	129.68	132.50	0.0050	33099	7.67	6.01
E-SWMF-REDUCED	100yr-2hr	129.85	132.50	0.0050	33731	48.85	7.90
E-SWMF-REDUCED	100yr-4hr	130.10	132.50	0.0050	34734	26.02	14.05
E-SWMF-REDUCED	100yr-8hr	130.21	132.50	0.0050	35169	26.33	17.99
E-SWMF-REDUCED	10yr-1hr	128.56	132.50	0.0050	28806	40.54	0.71
E-SWMF-REDUCED	10yr-24hr	129.37	132.50	0.0050	31877	5.22	2.86
E-SWMF-REDUCED	10yr-2hr	129.18	132.50	0.0050	31156	33.65	1.50
E-SWMF-REDUCED	10yr-4hr	129.52	132.50	0.0050	32472	17.69	4.29
E-SWMF-REDUCED	10yr-8hr	129.65	132.50	0.0050	32963	18.15	5.62
E-SWMF-REDUCED	25yr-1hr	128.98	132.50	0.0050	30362	48.05	0.77
E-SWMF-REDUCED	25yr-24hr	129.44	132.50	0.0050	32173	5.94	3.55
E-SWMF-REDUCED	25yr-2hr	129.47	132.50	0.0050	32266	39.04	3.77
E-SWMF-REDUCED	25yr-4hr	129.85	132.50	0.0050	33741	21.11	7.93
E-SWMF-REDUCED	25yr-8hr	129.88	132.50	0.0050	33873	21.79	8.44
E-SWMF-REDUCED	2yr-1hr	127.77	132.50	0.0050	25814	27.00	0.58
E-SWMF-REDUCED	2yr-24hr	128.68	132.50	0.0050	29262	3.18	0.72
E-SWMF-REDUCED	2yr-2hr	128.31	132.50	0.0050	27852	23.72	0.67
E-SWMF-REDUCED	2yr-4hr	128.66	132.50	0.0050	29184	11.93	0.72
E-SWMF-REDUCED	2yr-8hr	129.00	132.50	0.0050	30447	12.04	0.77
E-SWMF-REDUCED	50yr-1hr	129.20	132.50	0.0050	31224	52.55	1.61
E-SWMF-REDUCED	50yr-24hr	129.54	132.50	0.0050	32559	6.73	4.52
E-SWMF-REDUCED	50yr-2hr	129.65	132.50	0.0050	32960	43.50	5.62
E-SWMF-REDUCED	50yr-4hr	129.98	132.50	0.0050	34255	23.00	10.53
E-SWMF-REDUCED	50yr-8hr	130.03	132.50	0.0050	34450	23.61	11.86
E-SWMF-REDUCED	5yr-1hr	128.22	132.50	0.0050	27512	34.52	0.65
E-SWMF-REDUCED	5yr-24hr	129.23	132.50	0.0050	31338	4.42	1.80
E-SWMF-REDUCED	5yr-2hr	128.81	132.50	0.0050	29720	29.15	0.74
E-SWMF-REDUCED	5yr-4hr	129.27	132.50	0.0050	31501	15.39	2.09
E-SWMF-REDUCED	5yr-8hr	129.46	132.50	0.0050	32248	16.02	3.73
POA-BARINEAU	100yr-1hr	92.00	95.00	0.0000	5	5.18	0.00
POA-BARINEAU	100yr-24hr	92.00	95.00	0.0000	5	56.94	0.00
POA-BARINEAU	100yr-2hr	92.00	95.00	0.0000	5	18.95	0.00
POA-BARINEAU	100yr-4hr	92.00	95.00	0.0000	5	64.13	0.00
POA-BARINEAU	100yr-8hr	92.00	95.00	0.0000	5	78.06	0.00
POA-BARINEAU	10yr-1hr	92.00	95.00	0.0000	5	0.34	0.00
POA-BARINEAU	10yr-24hr	92.00	95.00	0.0000	5	25.67	0.00
POA-BARINEAU	10yr-2hr	92.00	95.00	0.0000	5	0.45	0.00
POA-BARINEAU	10yr-4hr	92.00	95.00	0.0000	5	11.19	0.00
POA-BARINEAU	10yr-8hr	92.00	95.00	0.0000	5	24.86	0.00
POA-BARINEAU	25yr-1hr	92.00	95.00	0.0000	5	0.70	0.00
POA-BARINEAU	25yr-24hr	92.00	95.00	0.0000	5	34.78	0.00
POA-BARINEAU	25yr-2hr	92.00	95.00	0.0000	5	3.07	0.00
POA-BARINEAU	25yr-4hr	92.00	95.00	0.0000	5	29.98	0.00
POA-BARINEAU	25yr-8hr	92.00	95.00	0.0000	5	49.02	0.00
POA-BARINEAU	2yr-1hr	92.00	95.00	0.0000	5	0.22	0.00
POA-BARINEAU	2yr-24hr	92.00	95.00	0.0000	5	4.61	0.00
POA-BARINEAU	2yr-2hr	92.00	95.00	0.0000	5	0.20	0.00
POA-BARINEAU	2yr-4hr	92.00	95.00	0.0000	5	0.60	0.00
POA-BARINEAU	2yr-8hr	92.00	95.00	0.0000	5	2.97	0.00
POA-BARINEAU	50yr-1hr	92.00	95.00	0.0000	5	1.99	0.00
POA-BARINEAU	50yr-24hr	92.00	95.00	0.0000	5	43.62	0.00
POA-BARINEAU	50yr-2hr	92.00	95.00	0.0000	5	8.26	0.00

Name	Simulation	Max Stage ft	Warning Stage ft	Max Delta Stage ft	Max Surf Area ft2	Max Inflow cfs	Max Outflow cfs
POA-BARINEAU	50yr-4hr	92.00	95.00	0.0000	5	43.04	0.00
POA-BARINEAU	50yr-8hr	92.00	95.00	0.0000	5	60.12	0.00
POA-BARINEAU	5yr-1hr	92.00	95.00	0.0000	5	0.29	0.00
POA-BARINEAU	5yr-24hr	92.00	95.00	0.0000	5	16.23	0.00
POA-BARINEAU	5yr-2hr	92.00	95.00	0.0000	5	0.27	0.00
POA-BARINEAU	5yr-4hr	92.00	95.00	0.0000	5	3.81	0.00
POA-BARINEAU	5yr-8hr	92.00	95.00	0.0000	5	15.51	0.00
RAILROAD-1	100yr-1hr	115.18	125.00	0.0004	7259	3.60	3.56
RAILROAD-1	100yr-24hr	115.40	125.00	0.0016	18079	19.02	19.02
RAILROAD-1	100yr-2hr	115.26	125.00	0.0005	10630	9.42	9.16
RAILROAD-1	100yr-4hr	115.36	125.00	0.0006	16451	15.80	15.72
RAILROAD-1	100yr-8hr	115.40	125.00	0.0006	18046	18.95	18.95
RAILROAD-1	10yr-1hr	115.00	125.00	0.0000	115	0.00	0.00
RAILROAD-1	10yr-24hr	115.31	125.00	-0.0047	14160	11.59	11.59
RAILROAD-1	10yr-2hr	115.09	125.00	0.0004	3591	0.74	0.60
RAILROAD-1	10yr-4hr	115.23	125.00	0.0005	9176	6.46	6.38
RAILROAD-1	10yr-8hr	115.31	125.00	0.0042	14027	11.37	11.37
RAILROAD-1	25yr-1hr	115.08	125.00	0.0005	3435	0.56	0.53
RAILROAD-1	25yr-24hr	115.35	125.00	0.0034	15777	14.44	14.44
RAILROAD-1	25yr-2hr	115.17	125.00	0.0004	6773	3.23	3.00
RAILROAD-1	25yr-4hr	115.31	125.00	0.0012	14207	11.80	11.67
RAILROAD-1	25yr-8hr	115.35	125.00	0.0009	16110	15.07	15.07
RAILROAD-1	2yr-1hr	115.00	125.00	0.0000	117	0.00	0.00
RAILROAD-1	2yr-24hr	115.17	125.00	0.0007	6872	3.11	3.11
RAILROAD-1	2yr-2hr	115.00	125.00	0.0000	117	0.00	0.00
RAILROAD-1	2yr-4hr	115.03	125.00	0.0005	1346	0.07	0.04
RAILROAD-1	2yr-8hr	115.15	125.00	0.0005	6015	2.23	2.22
RAILROAD-1	50yr-1hr	115.13	125.00	0.0005	5239	1.61	1.57
RAILROAD-1	50yr-24hr	115.37	125.00	0.0018	16741	16.29	16.29
RAILROAD-1	50yr-2hr	115.22	125.00	0.0004	8758	5.94	5.68
RAILROAD-1	50yr-4hr	115.34	125.00	0.0007	15593	14.19	14.09
RAILROAD-1	50yr-8hr	115.37	125.00	0.0006	16953	16.71	16.71
RAILROAD-1	5yr-1hr	115.00	125.00	0.0000	117	0.00	0.00
RAILROAD-1	5yr-24hr	115.25	125.00	0.0007	10102	8.08	8.08
RAILROAD-1	5yr-2hr	115.01	125.00	0.0003	463	0.02	0.00
RAILROAD-1	5yr-4hr	115.17	125.00	0.0005	6768	3.07	2.99
RAILROAD-1	5yr-8hr	115.25	125.00	0.0005	10031	7.94	7.94
TRANS RD	100yr-1hr	110.05	112.00	-0.0003	29260	2.94	2.89
TRANS RD	100yr-24hr	110.23	112.00	-0.0008	34210	31.47	31.46
TRANS RD	100yr-2hr	110.18	112.00	-0.0006	32622	20.45	20.01
TRANS RD	100yr-4hr	110.29	112.00	-0.0039	36440	47.92	47.81
TRANS RD	100yr-8hr	110.32	112.00	-0.0032	37445	56.68	56.62
TRANS RD	10yr-1hr	110.02	112.00	0.0001	28399	0.55	0.50
TRANS RD	10yr-24hr	110.12	112.00	-0.0014	31088	11.51	11.50
TRANS RD	10yr-2hr	110.02	112.00	0.0000	28460	0.77	0.60
TRANS RD	10yr-4hr	110.10	112.00	-0.0006	30354	7.50	7.46
TRANS RD	10yr-8hr	110.14	112.00	-0.0004	31574	13.87	13.82
TRANS RD	25yr-1hr	110.02	112.00	0.0001	28428	0.61	0.55
TRANS RD	25yr-24hr	110.15	112.00	-0.0023	31899	16.04	16.04
TRANS RD	25yr-2hr	110.06	112.00	0.0002	29486	4.38	3.75
TRANS RD	25yr-4hr	110.18	112.00	-0.0024	32638	20.15	20.10
TRANS RD	25yr-8hr	110.23	112.00	-0.0006	34179	30.72	30.64
TRANS RD	2yr-1hr	110.01	112.00	0.0002	28333	0.43	0.37
TRANS RD	2yr-24hr	110.03	112.00	0.0001	28766	1.46	1.46
TRANS RD	2yr-2hr	110.01	112.00	0.0001	28344	0.46	0.39
TRANS RD	2yr-4hr	110.02	112.00	0.0000	28467	0.66	0.64
TRANS RD	2yr-8hr	110.02	112.00	-0.0001	28570	0.92	0.90
TRANS RD	50yr-1hr	110.03	112.00	0.0001	28633	1.03	1.01
TRANS RD	50yr-24hr	110.19	112.00	-0.0029	32940	22.59	22.58
TRANS RD	50yr-2hr	110.11	112.00	-0.0003	30859	10.55	9.94
TRANS RD	50yr-4hr	110.22	112.00	0.0004	34045	29.63	29.56
TRANS RD	50yr-8hr	110.27	112.00	-0.0005	35482	40.50	40.45
TRANS RD	5yr-1hr	110.02	112.00	0.0002	28372	0.50	0.44
TRANS RD	5yr-24hr	110.09	112.00	-0.0011	30200	7.00	6.99
TRANS RD	5yr-2hr	110.02	112.00	0.0000	28382	0.53	0.46
TRANS RD	5yr-4hr	110.04	112.00	0.0001	29055	2.36	2.25
TRANS RD	5yr-8hr	110.09	112.00	-0.0020	30216	6.90	6.90

HOPKINS ELECTRIC PLANT-POST
DOWNSTREAM ANALYSIS- OUTPUT
MBC Job # R83.001
Date: Mar. 28, 2017

Name	Group	Simulation	Max Time Stage hrs	Max Stage ft	Warning Stage ft	Max Delta Stage ft	Max Surf Area ft2	Max Time Inflow hrs	Max Inflow cfs	Max Time Outflow hrs	Max Outflow cfs
B-2DOWN-STREAM-ANA		100yr-1hr	1.66	120.12	125.00	-0.0003	46156	1.13	3.81	1.66	2.45
B-2DOWN-STREAM-ANA		100yr-24hr	15.36	120.45	125.00	-0.0014	53218	15.20	19.10	15.36	18.94
B-2DOWN-STREAM-ANA		100yr-2hr	2.00	120.36	125.00	0.0006	51308	1.93	14.79	2.00	13.15
B-2DOWN-STREAM-ANA		100yr-4hr	3.34	120.61	125.00	-0.0035	56714	3.13	32.27	3.34	29.93
B-2DOWN-STREAM-ANA		100yr-8hr	5.19	120.66	125.00	-0.0027	57949	5.08	35.21	5.19	34.59
B-2DOWN-STREAM-ANA		10yr-1hr	2.00	120.04	125.00	0.0002	44562	1.37	0.70	2.00	0.55
B-2DOWN-STREAM-ANA		10yr-24hr	19.27	120.24	125.00	-0.0011	48623	19.12	7.15	19.27	7.08
B-2DOWN-STREAM-ANA		10yr-2hr	2.00	120.05	125.00	0.0001	44782	2.00	1.38	2.00	0.73
B-2DOWN-STREAM-ANA		10yr-4hr	3.91	120.20	125.00	0.0004	47822	3.56	5.95	3.91	5.30
B-2DOWN-STREAM-ANA		10yr-8hr	5.52	120.28	125.00	-0.0008	49658	5.23	10.08	5.52	9.20
B-2DOWN-STREAM-ANA		25yr-1hr	2.00	120.05	125.00	0.0001	44625	1.37	0.76	2.00	0.61
B-2DOWN-STREAM-ANA		25yr-24hr	16.23	120.30	125.00	-0.0019	49903	16.10	9.98	16.23	9.94
B-2DOWN-STREAM-ANA		25yr-2hr	2.00	120.13	125.00	0.0004	46528	2.00	4.73	2.00	2.95
B-2DOWN-STREAM-ANA		25yr-4hr	3.63	120.36	125.00	-0.0021	51305	3.27	14.63	3.63	13.24
B-2DOWN-STREAM-ANA		25yr-8hr	5.33	120.46	125.00	-0.0013	53462	5.13	20.29	5.33	19.39
B-2DOWN-STREAM-ANA		2yr-1hr	2.00	120.04	125.00	0.0004	44416	1.39	0.58	2.00	0.43
B-2DOWN-STREAM-ANA		2yr-24hr	22.29	120.07	125.00	0.0001	45038	21.29	1.06	22.29	1.05
B-2DOWN-STREAM-ANA		2yr-2hr	2.00	120.04	125.00	0.0002	44460	2.00	0.66	2.00	0.46
B-2DOWN-STREAM-ANA		2yr-4hr	4.00	120.05	125.00	0.0001	44678	4.00	0.72	4.00	0.66
B-2DOWN-STREAM-ANA		2yr-8hr	8.00	120.06	125.00	0.0001	44788	7.98	0.78	8.00	0.77
B-2DOWN-STREAM-ANA		50yr-1hr	1.99	120.07	125.00	0.0001	45035	1.19	1.54	1.99	1.02
B-2DOWN-STREAM-ANA		50yr-24hr	15.47	120.37	125.00	-0.0024	51428	15.23	13.97	15.47	13.82
B-2DOWN-STREAM-ANA		50yr-2hr	2.00	120.23	125.00	0.0005	48654	2.00	8.83	2.00	6.86
B-2DOWN-STREAM-ANA		50yr-4hr	3.49	120.45	125.00	0.0007	53338	3.18	20.88	3.49	18.94
B-2DOWN-STREAM-ANA		50yr-8hr	5.26	120.54	125.00	-0.0010	55279	5.12	25.97	5.26	25.16
B-2DOWN-STREAM-ANA		5yr-1hr	2.00	120.04	125.00	0.0003	44502	1.38	0.65	2.00	0.50
B-2DOWN-STREAM-ANA		5yr-24hr	19.36	120.18	125.00	-0.0009	47309	19.14	4.53	19.36	4.45
B-2DOWN-STREAM-ANA		5yr-2hr	2.00	120.04	125.00	0.0001	44543	2.00	0.74	2.00	0.53
B-2DOWN-STREAM-ANA		5yr-4hr	4.00	120.10	125.00	0.0002	45731	3.75	2.23	4.00	1.86
B-2DOWN-STREAM-ANA		5yr-8hr	6.21	120.19	125.00	-0.0016	47533	5.32	5.21	6.21	4.79
B-3DOWN-STREAM-ANA		100yr-1hr	1.11	124.02	130.00	0.0001	65894	1.02	3.67	1.11	3.54
B-3DOWN-STREAM-ANA		100yr-24hr	12.20	124.03	130.00	0.0001	66032	12.13	6.01	12.20	6.00
B-3DOWN-STREAM-ANA		100yr-2hr	1.68	124.03	130.00	0.0001	66127	1.64	7.90	1.68	7.88
B-3DOWN-STREAM-ANA		100yr-4hr	3.03	124.05	130.00	0.0001	66401	3.01	14.05	3.03	14.04
B-3DOWN-STREAM-ANA		100yr-8hr	4.13	124.05	130.00	0.0001	66546	4.08	17.99	4.13	17.69
B-3DOWN-STREAM-ANA		10yr-1hr	1.37	124.01	130.00	0.0000	65684	1.12	0.71	1.37	0.70
B-3DOWN-STREAM-ANA		10yr-24hr	15.17	124.02	130.00	0.0000	65851	15.10	2.86	15.17	2.86
B-3DOWN-STREAM-ANA		10yr-2hr	2.00	124.01	130.00	0.0000	65745	2.00	1.50	2.00	1.38
B-3DOWN-STREAM-ANA		10yr-4hr	3.28	124.02	130.00	0.0001	65937	3.20	4.29	3.28	4.26
B-3DOWN-STREAM-ANA		10yr-8hr	5.10	124.03	130.00	-0.0001	66011	5.06	5.62	5.10	5.59
B-3DOWN-STREAM-ANA		25yr-1hr	1.37	124.01	130.00	0.0000	65690	1.12	0.77	1.37	0.76
B-3DOWN-STREAM-ANA		25yr-24hr	15.06	124.02	130.00	0.0001	65894	15.03	3.55	15.06	3.54
B-3DOWN-STREAM-ANA		25yr-2hr	2.00	124.02	130.00	0.0000	65907	1.93	3.77	2.00	3.76
B-3DOWN-STREAM-ANA		25yr-4hr	3.13	124.03	130.00	0.0001	66126	3.08	7.93	3.13	7.86
B-3DOWN-STREAM-ANA		25yr-8hr	4.43	124.03	130.00	0.0001	66154	4.34	8.44	4.43	8.43
B-3DOWN-STREAM-ANA		2yr-1hr	1.39	124.01	130.00	0.0000	65671	1.11	0.58	1.39	0.58
B-3DOWN-STREAM-ANA		2yr-24hr	21.31	124.01	130.00	0.0000	65686	21.16	0.72	21.31	0.72
B-3DOWN-STREAM-ANA		2yr-2hr	2.00	124.01	130.00	0.0000	65680	2.00	0.67	2.00	0.66
B-3DOWN-STREAM-ANA		2yr-4hr	4.00	124.01	130.00	0.0000	65686	4.00	0.72	4.00	0.72
B-3DOWN-STREAM-ANA		2yr-8hr	8.00	124.01	130.00	0.0000	65690	7.98	0.77	8.00	0.77
B-3DOWN-STREAM-ANA		50yr-1hr	1.19	124.01	130.00	0.0000	65757	1.08	1.61	1.19	1.54
B-3DOWN-STREAM-ANA		50yr-24hr	13.11	124.02	130.00	0.0001	65951	13.06	4.52	13.11	4.51
B-3DOWN-STREAM-ANA		50yr-2hr	1.86	124.03	130.00	0.0000	66012	1.81	5.62	1.86	5.60
B-3DOWN-STREAM-ANA		50yr-4hr	3.09	124.04	130.00	0.0001	66245	3.05	10.53	3.09	10.42
B-3DOWN-STREAM-ANA		50yr-8hr	4.22	124.04	130.00	0.0001	66303	4.16	11.86	4.22	11.73

Name	Group	Simulation	Max Time Stage hrs	Max Stage ft	Warning Stage ft	Max Delta Stage ft	Max Surf Area ft2	Max Time Inflow hrs	Max Inflow cfs	Max Time Outflow hrs	Max Outflow cfs
B-3DOWN	STREAM-ANA	5yr-1hr	1.38	124.01	130.00	0.0000	65679	1.11	0.65	1.38	0.65
B-3DOWN	STREAM-ANA	5yr-24hr	19.01	124.01	130.00	0.0000	65777	18.99	1.80	19.01	1.80
B-3DOWN	STREAM-ANA	5yr-2hr	2.00	124.01	130.00	0.0000	65687	2.00	0.74	2.00	0.74
B-3DOWN	STREAM-ANA	5yr-4hr	3.67	124.01	130.00	0.0000	65797	3.59	2.09	3.67	2.07
B-3DOWN	STREAM-ANA	5yr-8hr	5.18	124.02	130.00	-0.0001	65903	5.11	3.73	5.18	3.69
BARINEAU-RDDOWN	STREAM-ANA	100yr-1hr	2.00	94.38	102.00	0.0031	10311	1.94	6.34	2.00	5.18
BARINEAU-RDDOWN	STREAM-ANA	100yr-24hr	16.32	96.67	102.00	0.0050	49837	15.45	57.25	16.32	56.94
BARINEAU-RDDOWN	STREAM-ANA	100yr-2hr	2.00	95.21	102.00	0.0031	25909	2.00	29.84	2.00	18.95
BARINEAU-RDDOWN	STREAM-ANA	100yr-4hr	3.88	96.89	102.00	0.0040	53933	3.52	82.27	3.88	64.13
BARINEAU-RDDOWN	STREAM-ANA	100yr-8hr	5.64	97.31	102.00	-0.0046	83586	5.43	95.97	5.64	78.06
BARINEAU-RDDOWN	STREAM-ANA	10yr-1hr	2.00	93.80	102.00	0.0022	2138	2.00	0.43	2.00	0.34
BARINEAU-RDDOWN	STREAM-ANA	10yr-24hr	19.84	95.52	102.00	-0.0050	31782	19.33	32.03	19.84	25.67
BARINEAU-RDDOWN	STREAM-ANA	10yr-2hr	2.00	93.82	102.00	0.0010	2606	2.00	0.77	2.00	0.45
BARINEAU-RDDOWN	STREAM-ANA	10yr-4hr	4.00	94.80	102.00	0.0031	17767	4.00	13.81	4.00	11.19
BARINEAU-RDDOWN	STREAM-ANA	10yr-8hr	6.43	95.48	102.00	0.0045	31170	5.86	32.88	6.43	24.86
BARINEAU-RDDOWN	STREAM-ANA	25yr-1hr	2.00	93.88	102.00	0.0029	2811	2.00	0.92	2.00	0.70
BARINEAU-RDDOWN	STREAM-ANA	25yr-24hr	19.52	95.89	102.00	0.0050	37469	15.22	36.68	19.52	34.78
BARINEAU-RDDOWN	STREAM-ANA	25yr-2hr	2.00	94.19	102.00	0.0027	7942	2.00	5.48	2.00	3.07
BARINEAU-RDDOWN	STREAM-ANA	25yr-4hr	4.00	95.70	102.00	0.0050	35761	3.74	43.06	4.00	29.98
BARINEAU-RDDOWN	STREAM-ANA	25yr-8hr	5.86	96.40	102.00	-0.0043	45702	5.30	58.34	5.86	49.02
BARINEAU-RDDOWN	STREAM-ANA	2yr-1hr	2.00	93.76	102.00	0.0035	1908	2.00	0.30	2.00	0.22
BARINEAU-RDDOWN	STREAM-ANA	2yr-24hr	22.36	94.33	102.00	0.0015	8943	22.19	4.62	22.36	4.61
BARINEAU-RDDOWN	STREAM-ANA	2yr-2hr	2.00	93.76	102.00	0.0012	1901	2.00	0.30	2.00	0.20
BARINEAU-RDDOWN	STREAM-ANA	2yr-4hr	4.00	93.86	102.00	0.0007	2470	4.00	0.64	4.00	0.60
BARINEAU-RDDOWN	STREAM-ANA	2yr-8hr	8.00	94.18	102.00	0.0017	6452	8.00	3.07	8.00	2.97
BARINEAU-RDDOWN	STREAM-ANA	50yr-1hr	2.00	94.07	102.00	0.0030	4857	2.00	2.39	2.00	1.99
BARINEAU-RDDOWN	STREAM-ANA	50yr-24hr	19.40	96.22	102.00	-0.0050	42404	19.15	44.03	19.40	43.62
BARINEAU-RDDOWN	STREAM-ANA	50yr-2hr	2.00	94.61	102.00	0.0030	15680	2.00	13.80	2.00	8.26
BARINEAU-RDDOWN	STREAM-ANA	50yr-4hr	4.00	96.20	102.00	0.0045	47336	3.45	56.22	4.00	43.04
BARINEAU-RDDOWN	STREAM-ANA	50yr-8hr	5.67	96.77	102.00	0.0041	51748	5.26	72.96	5.67	60.12
BARINEAU-RDDOWN	STREAM-ANA	5yr-1hr	2.00	93.78	102.00	0.0031	2045	2.00	0.38	2.00	0.29
BARINEAU-RDDOWN	STREAM-ANA	5yr-24hr	19.89	95.07	102.00	0.0030	21270	19.51	16.34	19.89	16.23
BARINEAU-RDDOWN	STREAM-ANA	5yr-2hr	2.00	93.78	102.00	0.0007	2037	2.00	0.37	2.00	0.27
BARINEAU-RDDOWN	STREAM-ANA	5yr-4hr	4.00	94.26	102.00	0.0028	8374	4.00	4.85	4.00	3.81
BARINEAU-RDDOWN	STREAM-ANA	5yr-8hr	7.53	95.04	102.00	0.0030	20732	7.27	15.66	7.53	15.51
BETHEL-CHURCH-DOWN	STREAM-ANA	100yr-1hr	1.80	142.05	155.00	0.0001	140570	0.87	5.35	0.00	0.00
BETHEL-CHURCH-DOWN	STREAM-ANA	100yr-24hr	24.00	143.77	155.00	0.0026	156789	12.03	7.71	0.00	0.00
BETHEL-CHURCH-DOWN	STREAM-ANA	100yr-2hr	2.00	142.22	155.00	0.0003	142182	1.27	8.37	0.00	0.00
BETHEL-CHURCH-DOWN	STREAM-ANA	100yr-4hr	4.00	142.54	155.00	0.0005	145260	3.00	17.59	0.00	0.00
BETHEL-CHURCH-DOWN	STREAM-ANA	100yr-8hr	8.00	143.05	155.00	0.0011	149999	4.03	24.81	0.00	0.00
BETHEL-CHURCH-DOWN	STREAM-ANA	10yr-1hr	0.00	142.00	155.00	0.0000	140135	0.00	0.00	0.00	0.00
BETHEL-CHURCH-DOWN	STREAM-ANA	10yr-24hr	24.00	142.64	155.00	0.0012	146132	15.03	2.85	0.00	0.00
BETHEL-CHURCH-DOWN	STREAM-ANA	10yr-2hr	2.00	142.02	155.00	0.0001	140300	1.83	1.21	0.00	0.00
BETHEL-CHURCH-DOWN	STREAM-ANA	10yr-4hr	4.00	142.11	155.00	0.0002	141150	3.03	4.79	0.00	0.00
BETHEL-CHURCH-DOWN	STREAM-ANA	10yr-8hr	8.00	142.31	155.00	0.0010	143097	5.00	5.58	0.00	0.00
BETHEL-CHURCH-DOWN	STREAM-ANA	25yr-1hr	1.80	142.00	155.00	0.0000	140177	0.90	0.56	0.00	0.00
BETHEL-CHURCH-DOWN	STREAM-ANA	25yr-24hr	24.00	142.93	155.00	0.0016	148906	15.03	4.15	0.00	0.00
BETHEL-CHURCH-DOWN	STREAM-ANA	25yr-2hr	2.00	142.06	155.00	0.0002	140742	1.63	3.13	0.00	0.00
BETHEL-CHURCH-DOWN	STREAM-ANA	25yr-4hr	4.00	142.25	155.00	0.0003	142510	3.03	9.53	0.00	0.00
BETHEL-CHURCH-DOWN	STREAM-ANA	25yr-8hr	8.00	142.60	155.00	0.0013	145796	4.07	12.69	0.00	0.00
BETHEL-CHURCH-DOWN	STREAM-ANA	2yr-1hr	0.00	142.00	155.00	0.0000	140135	0.00	0.00	0.00	0.00
BETHEL-CHURCH-DOWN	STREAM-ANA	2yr-24hr	23.99	142.08	155.00	0.0002	140844	19.03	0.53	0.00	0.00
BETHEL-CHURCH-DOWN	STREAM-ANA	2yr-2hr	0.00	142.00	155.00	0.0000	140135	0.00	0.00	0.00	0.00
BETHEL-CHURCH-DOWN	STREAM-ANA	2yr-4hr	4.00	142.00	155.00	0.0000	140138	4.00	0.04	0.00	0.00

Name	Group	Simulation	Max Time Stage hrs	Max Stage ft	Warning Stage ft	Max Delta Stage ft	Max Surf Area ft2	Max Time Inflow hrs	Max Inflow cfs	Max Time Outflow hrs	Max Outflow cfs
BETHEL-CHURCH-DOWN-STREAM-ANA		2yr-8hr	8.00	142.03	155.00	0.0001	140400	7.01	0.48	0.00	0.00
BETHEL-CHURCH-DOWN-STREAM-ANA		50yr-1hr	1.80	142.02	155.00	0.0001	140297	0.87	2.16	0.00	0.00
BETHEL-CHURCH-DOWN-STREAM-ANA		50yr-24hr	24.00	143.29	155.00	0.0020	152337	15.00	5.72	0.00	0.00
BETHEL-CHURCH-DOWN-STREAM-ANA		50yr-2hr	2.00	142.12	155.00	0.0002	141302	1.47	5.23	0.00	0.00
BETHEL-CHURCH-DOWN-STREAM-ANA		50yr-4hr	4.00	142.35	155.00	0.0004	143467	3.00	12.47	0.00	0.00
BETHEL-CHURCH-DOWN-STREAM-ANA		50yr-8hr	8.00	142.77	155.00	0.0012	147379	4.03	17.27	0.00	0.00
BETHEL-CHURCH-DOWN-STREAM-ANA		5yr-1hr	0.00	142.00	155.00	0.0000	140135	0.00	0.00	0.00	0.00
BETHEL-CHURCH-DOWN-STREAM-ANA		5yr-24hr	24.01	142.36	155.00	0.0008	143554	19.01	1.83	0.00	0.00
BETHEL-CHURCH-DOWN-STREAM-ANA		5yr-2hr	2.00	142.00	155.00	0.0000	140144	2.00	0.19	0.00	0.00
BETHEL-CHURCH-DOWN-STREAM-ANA		5yr-4hr	4.00	142.04	155.00	0.0001	140539	3.06	2.11	0.00	0.00
BETHEL-CHURCH-DOWN-STREAM-ANA		5yr-8hr	8.00	142.18	155.00	0.0007	141863	5.03	3.46	0.00	0.00
CONFLUENCEDOWN-STREAM-ANA		100yr-1hr	2.00	104.31	107.50	0.0018	17613	1.98	6.18	1.94	6.34
CONFLUENCEDOWN-STREAM-ANA		100yr-24hr	12.96	104.80	107.50	0.0024	49086	15.42	51.47	15.51	51.45
CONFLUENCEDOWN-STREAM-ANA		100yr-2hr	2.00	104.70	107.50	0.0017	36384	2.00	30.65	2.00	27.26
CONFLUENCEDOWN-STREAM-ANA		100yr-4hr	3.15	104.96	107.50	-0.0018	55962	3.37	66.68	3.53	75.41
CONFLUENCEDOWN-STREAM-ANA		100yr-8hr	4.50	105.02	107.50	-0.0049	58468	5.22	79.01	5.64	88.29
CONFLUENCEDOWN-STREAM-ANA		10yr-1hr	2.00	104.10	107.50	0.0007	5811	2.00	0.50	2.00	0.43
CONFLUENCEDOWN-STREAM-ANA		10yr-24hr	19.33	104.62	107.50	-0.0050	39661	19.27	24.13	19.33	30.15
CONFLUENCEDOWN-STREAM-ANA		10yr-2hr	2.00	104.13	107.50	0.0004	8129	2.00	1.20	2.00	0.77
CONFLUENCEDOWN-STREAM-ANA		10yr-4hr	4.00	104.49	107.50	0.0017	26294	4.00	13.99	4.00	13.44
CONFLUENCEDOWN-STREAM-ANA		10yr-8hr	5.85	104.65	107.50	-0.0041	34293	5.75	23.86	5.86	31.51
CONFLUENCEDOWN-STREAM-ANA		25yr-1hr	2.00	104.14	107.50	0.0008	8480	2.00	1.08	2.00	0.92
CONFLUENCEDOWN-STREAM-ANA		25yr-24hr	15.59	104.68	107.50	-0.0032	43005	19.20	32.12	15.22	34.23
CONFLUENCEDOWN-STREAM-ANA		25yr-2hr	2.00	104.28	107.50	0.0008	16269	2.00	6.78	2.00	5.42
CONFLUENCEDOWN-STREAM-ANA		25yr-4hr	3.74	104.74	107.50	-0.0022	38782	3.73	31.92	3.74	40.90
CONFLUENCEDOWN-STREAM-ANA		25yr-8hr	5.39	104.84	107.50	-0.0028	52013	5.36	47.04	5.30	53.76
CONFLUENCEDOWN-STREAM-ANA		2yr-1hr	2.00	104.09	107.50	0.0019	5251	2.00	0.37	2.00	0.30
CONFLUENCEDOWN-STREAM-ANA		2yr-24hr	22.21	104.26	107.50	0.0006	15324	22.13	4.59	22.21	4.58
CONFLUENCEDOWN-STREAM-ANA		2yr-2hr	2.00	104.09	107.50	0.0007	5243	2.00	0.39	2.00	0.30
CONFLUENCEDOWN-STREAM-ANA		2yr-4hr	4.00	104.12	107.50	0.0003	6968	4.00	0.68	4.00	0.64
CONFLUENCEDOWN-STREAM-ANA		2yr-8hr	8.00	104.22	107.50	0.0004	13200	7.98	3.12	8.00	3.07
CONFLUENCEDOWN-STREAM-ANA		50yr-1hr	2.00	104.20	107.50	0.0010	11967	2.00	2.58	2.00	2.39
CONFLUENCEDOWN-STREAM-ANA		50yr-24hr	14.02	104.72	107.50	0.0025	45013	19.19	39.91	15.49	40.12
CONFLUENCEDOWN-STREAM-ANA		50yr-2hr	2.00	104.48	107.50	0.0016	25808	2.00	16.13	2.00	12.90
CONFLUENCEDOWN-STREAM-ANA		50yr-4hr	3.45	104.85	107.50	-0.0023	48582	3.58	44.04	3.45	52.21
CONFLUENCEDOWN-STREAM-ANA		50yr-8hr	4.73	104.89	107.50	0.0018	51858	5.21	58.94	5.27	66.28
CONFLUENCEDOWN-STREAM-ANA		5yr-1hr	2.00	104.10	107.50	0.0013	5585	2.00	0.44	2.00	0.38
CONFLUENCEDOWN-STREAM-ANA		5yr-24hr	19.56	104.52	107.50	0.0026	28162	19.41	15.46	19.56	15.43
CONFLUENCEDOWN-STREAM-ANA		5yr-2hr	2.00	104.10	107.50	0.0004	5684	2.00	0.46	2.00	0.37
CONFLUENCEDOWN-STREAM-ANA		5yr-4hr	4.00	104.27	107.50	0.0007	15613	4.00	5.24	4.00	4.85
CONFLUENCEDOWN-STREAM-ANA		5yr-8hr	7.33	104.52	107.50	0.0017	27830	7.23	15.04	7.33	15.01
D-3DOWN-STREAM-ANA		100yr-1hr	2.00	117.41	126.00	0.0035	73935	1.00	43.35	2.00	3.60
D-3DOWN-STREAM-ANA		100yr-24hr	21.31	120.79	126.00	0.0050	212281	12.17	38.83	21.31	19.02
D-3DOWN-STREAM-ANA		100yr-2hr	2.00	118.35	126.00	0.0039	112424	1.27	56.56	2.00	9.42
D-3DOWN-STREAM-ANA		100yr-4hr	4.00	119.79	126.00	0.0050	171307	3.07	83.52	4.00	15.80
D-3DOWN-STREAM-ANA		100yr-8hr	7.68	120.77	126.00	0.0050	211426	4.20	99.84	7.68	18.95
D-3DOWN-STREAM-ANA		10yr-1hr	2.00	115.88	126.00	0.0030	37459	1.07	10.41	2.00	0.00
D-3DOWN-STREAM-ANA		10yr-24hr	19.85	118.67	126.00	0.0050	125445	15.13	16.35	19.85	11.59
D-3DOWN-STREAM-ANA		10yr-2hr	2.00	116.64	126.00	0.0031	50732	1.70	18.00	2.00	0.74
D-3DOWN-STREAM-ANA		10yr-4hr	4.00	117.91	126.00	0.0042	94277	3.13	33.55	4.00	6.46
D-3DOWN-STREAM-ANA		10yr-8hr	7.39	118.64	126.00	0.0050	124124	4.27	38.00	7.39	11.37
D-3DOWN-STREAM-ANA		25yr-1hr	2.00	116.56	126.00	0.0034	49257	1.00	21.85	2.00	0.56
D-3DOWN-STREAM-ANA		25yr-24hr	19.90	119.18	126.00	0.0050	146389	12.20	21.65	19.90	14.44
D-3DOWN-STREAM-ANA		25yr-2hr	2.00	117.34	126.00	0.0031	70846	1.53	28.94	2.00	3.23

Name	Group	Simulation	Max Time Stage hrs	Max Stage ft	Warning Stage ft	Max Delta Stage ft	Max Surf Area ft2	Max Time Inflow hrs	Max Inflow cfs	Max Time Outflow hrs	Max Outflow cfs
D-3DOWN	STREAM-ANA	25yr-4hr	4.00	118.70	126.00	0.0050	126759	3.10	52.30	4.00	11.80
D-3DOWN	STREAM-ANA	25yr-8hr	7.48	119.58	126.00	0.0050	162539	4.20	63.24	7.48	15.07
D-3DOWN	STREAM-ANA	2yr-1hr	2.00	115.02	126.00	0.0003	22321	1.20	0.17	0.00	0.00
D-3DOWN	STREAM-ANA	2yr-24hr	22.04	117.31	126.00	0.0043	69809	19.06	4.91	22.04	3.11
D-3DOWN	STREAM-ANA	2yr-2hr	2.00	115.37	126.00	0.0030	28461	1.97	4.31	0.00	0.00
D-3DOWN	STREAM-ANA	2yr-4hr	4.00	116.16	126.00	0.0036	42302	3.20	9.18	4.00	0.07
D-3DOWN	STREAM-ANA	2yr-8hr	7.98	117.11	126.00	0.0034	61641	5.13	10.67	7.98	2.23
D-3DOWN	STREAM-ANA	50yr-1hr	2.00	116.95	126.00	0.0035	56073	1.00	30.36	2.00	1.61
D-3DOWN	STREAM-ANA	50yr-24hr	21.20	119.94	126.00	0.0050	177303	12.17	29.24	21.20	16.29
D-3DOWN	STREAM-ANA	50yr-2hr	2.00	117.83	126.00	0.0031	90863	1.37	40.35	2.00	5.94
D-3DOWN	STREAM-ANA	50yr-4hr	4.00	119.12	126.00	0.0047	143871	3.07	63.83	4.00	14.19
D-3DOWN	STREAM-ANA	50yr-8hr	7.55	120.06	126.00	0.0050	182463	4.20	77.32	7.55	16.71
D-3DOWN	STREAM-ANA	5yr-1hr	2.00	115.39	126.00	0.0030	28882	1.07	4.09	0.00	0.00
D-3DOWN	STREAM-ANA	5yr-24hr	21.14	118.16	126.00	0.0050	104380	15.14	11.34	21.14	8.08
D-3DOWN	STREAM-ANA	5yr-2hr	2.00	116.03	126.00	0.0031	40020	1.80	10.77	2.00	0.02
D-3DOWN	STREAM-ANA	5yr-4hr	4.00	117.31	126.00	0.0041	69517	3.13	22.56	4.00	3.07
D-3DOWN	STREAM-ANA	5yr-8hr	7.60	118.14	126.00	0.0050	103540	4.27	25.48	7.60	7.94
E-SWMF-REDUCEDDOWN	STREAM-ANA	100yr-1hr	1.02	129.46	132.50	0.0050	32223	0.53	58.53	1.02	3.67
E-SWMF-REDUCEDDOWN	STREAM-ANA	100yr-24hr	12.13	129.68	132.50	0.0050	33099	12.00	7.67	12.13	6.01
E-SWMF-REDUCEDDOWN	STREAM-ANA	100yr-2hr	1.64	129.85	132.50	0.0050	33731	0.80	48.85	1.64	7.90
E-SWMF-REDUCEDDOWN	STREAM-ANA	100yr-4hr	3.01	130.10	132.50	0.0050	34734	2.00	26.02	3.01	14.05
E-SWMF-REDUCEDDOWN	STREAM-ANA	100yr-8hr	4.08	130.21	132.50	0.0050	35169	4.00	26.33	4.08	17.99
E-SWMF-REDUCEDDOWN	STREAM-ANA	10yr-1hr	1.12	128.56	132.50	0.0050	28806	0.53	40.54	1.12	0.71
E-SWMF-REDUCEDDOWN	STREAM-ANA	10yr-24hr	15.10	129.37	132.50	0.0050	31877	12.00	5.22	15.10	2.86
E-SWMF-REDUCEDDOWN	STREAM-ANA	10yr-2hr	2.00	129.18	132.50	0.0050	31156	0.80	33.65	2.00	1.50
E-SWMF-REDUCEDDOWN	STREAM-ANA	10yr-4hr	3.20	129.52	132.50	0.0050	32472	2.00	17.69	3.20	4.29
E-SWMF-REDUCEDDOWN	STREAM-ANA	10yr-8hr	5.06	129.65	132.50	0.0050	32963	4.00	18.15	5.06	5.62
E-SWMF-REDUCEDDOWN	STREAM-ANA	25yr-1hr	1.12	128.98	132.50	0.0050	30362	0.53	48.05	1.12	0.77
E-SWMF-REDUCEDDOWN	STREAM-ANA	25yr-24hr	15.03	129.44	132.50	0.0050	32173	12.00	5.94	15.03	3.55
E-SWMF-REDUCEDDOWN	STREAM-ANA	25yr-2hr	1.93	129.47	132.50	0.0050	32266	0.80	39.04	1.93	3.77
E-SWMF-REDUCEDDOWN	STREAM-ANA	25yr-4hr	3.08	129.85	132.50	0.0050	33741	2.00	21.11	3.08	7.93
E-SWMF-REDUCEDDOWN	STREAM-ANA	25yr-8hr	4.34	129.88	132.50	0.0050	33873	4.00	21.79	4.34	8.44
E-SWMF-REDUCEDDOWN	STREAM-ANA	2yr-1hr	1.11	127.77	132.50	0.0050	25814	0.60	27.00	1.11	0.58
E-SWMF-REDUCEDDOWN	STREAM-ANA	2yr-24hr	21.16	128.68	132.50	0.0050	29262	12.00	3.18	21.16	0.72
E-SWMF-REDUCEDDOWN	STREAM-ANA	2yr-2hr	2.00	128.31	132.50	0.0050	27852	0.80	23.72	2.00	0.67
E-SWMF-REDUCEDDOWN	STREAM-ANA	2yr-4hr	4.00	128.66	132.50	0.0050	29184	2.00	11.93	4.00	0.72
E-SWMF-REDUCEDDOWN	STREAM-ANA	2yr-8hr	7.98	129.00	132.50	0.0050	30447	4.00	12.04	7.98	0.77
E-SWMF-REDUCEDDOWN	STREAM-ANA	50yr-1hr	1.08	129.20	132.50	0.0050	31224	0.53	52.55	1.08	1.61
E-SWMF-REDUCEDDOWN	STREAM-ANA	50yr-24hr	13.06	129.54	132.50	0.0050	32559	12.00	6.73	13.06	4.52
E-SWMF-REDUCEDDOWN	STREAM-ANA	50yr-2hr	1.81	129.65	132.50	0.0050	32960	0.80	43.50	1.81	5.62
E-SWMF-REDUCEDDOWN	STREAM-ANA	50yr-4hr	3.05	129.98	132.50	0.0050	34255	2.00	23.00	3.05	10.53
E-SWMF-REDUCEDDOWN	STREAM-ANA	50yr-8hr	4.16	130.03	132.50	0.0050	34450	4.00	23.61	4.16	11.86
E-SWMF-REDUCEDDOWN	STREAM-ANA	5yr-1hr	1.11	128.22	132.50	0.0050	27512	0.53	34.52	1.11	0.65
E-SWMF-REDUCEDDOWN	STREAM-ANA	5yr-24hr	18.99	129.23	132.50	0.0050	31338	12.00	4.42	18.99	1.80
E-SWMF-REDUCEDDOWN	STREAM-ANA	5yr-2hr	2.00	128.81	132.50	0.0050	29720	0.80	29.15	2.00	0.74
E-SWMF-REDUCEDDOWN	STREAM-ANA	5yr-4hr	3.59	129.27	132.50	0.0050	31501	2.00	15.39	3.59	2.09
E-SWMF-REDUCEDDOWN	STREAM-ANA	5yr-8hr	5.11	129.46	132.50	0.0050	32248	4.00	16.02	5.11	3.73
POA-BARINEAUDOWN	STREAM-ANA	100yr-1hr	0.00	92.00	95.00	0.0000	5	2.00	5.18	0.00	0.00
POA-BARINEAUDOWN	STREAM-ANA	100yr-24hr	0.00	92.00	95.00	0.0000	5	16.32	56.94	0.00	0.00
POA-BARINEAUDOWN	STREAM-ANA	100yr-2hr	0.00	92.00	95.00	0.0000	5	2.00	18.95	0.00	0.00
POA-BARINEAUDOWN	STREAM-ANA	100yr-4hr	0.00	92.00	95.00	0.0000	5	3.88	64.13	0.00	0.00
POA-BARINEAUDOWN	STREAM-ANA	100yr-8hr	0.00	92.00	95.00	0.0000	5	5.64	78.06	0.00	0.00
POA-BARINEAUDOWN	STREAM-ANA	10yr-1hr	0.00	92.00	95.00	0.0000	5	2.00	0.34	0.00	0.00
POA-BARINEAUDOWN	STREAM-ANA	10yr-24hr	0.00	92.00	95.00	0.0000	5	19.84	25.67	0.00	0.00

Name	Group	Simulation	Max Time Stage hrs	Max Stage ft	Warning Stage ft	Max Delta Stage ft	Max Surf Area ft2	Max Time Inflow hrs	Max Inflow cfs	Max Time Outflow hrs	Max Outflow cfs
POA-BARINEAUDOWN-STREAM-ANA		10yr-2hr	0.00	92.00	95.00	0.0000	5	2.00	0.45	0.00	0.00
POA-BARINEAUDOWN-STREAM-ANA		10yr-4hr	0.00	92.00	95.00	0.0000	5	4.00	11.19	0.00	0.00
POA-BARINEAUDOWN-STREAM-ANA		10yr-8hr	0.00	92.00	95.00	0.0000	5	6.43	24.86	0.00	0.00
POA-BARINEAUDOWN-STREAM-ANA		25yr-1hr	0.00	92.00	95.00	0.0000	5	2.00	0.70	0.00	0.00
POA-BARINEAUDOWN-STREAM-ANA		25yr-24hr	0.00	92.00	95.00	0.0000	5	19.52	34.78	0.00	0.00
POA-BARINEAUDOWN-STREAM-ANA		25yr-2hr	0.00	92.00	95.00	0.0000	5	2.00	3.07	0.00	0.00
POA-BARINEAUDOWN-STREAM-ANA		25yr-4hr	0.00	92.00	95.00	0.0000	5	4.00	29.98	0.00	0.00
POA-BARINEAUDOWN-STREAM-ANA		25yr-8hr	0.00	92.00	95.00	0.0000	5	5.86	49.02	0.00	0.00
POA-BARINEAUDOWN-STREAM-ANA		2yr-1hr	0.00	92.00	95.00	0.0000	5	2.00	0.22	0.00	0.00
POA-BARINEAUDOWN-STREAM-ANA		2yr-24hr	0.00	92.00	95.00	0.0000	5	22.36	4.61	0.00	0.00
POA-BARINEAUDOWN-STREAM-ANA		2yr-2hr	0.00	92.00	95.00	0.0000	5	2.00	0.20	0.00	0.00
POA-BARINEAUDOWN-STREAM-ANA		2yr-4hr	0.00	92.00	95.00	0.0000	5	4.00	0.60	0.00	0.00
POA-BARINEAUDOWN-STREAM-ANA		2yr-8hr	0.00	92.00	95.00	0.0000	5	8.00	2.97	0.00	0.00
POA-BARINEAUDOWN-STREAM-ANA		50yr-1hr	0.00	92.00	95.00	0.0000	5	2.00	1.99	0.00	0.00
POA-BARINEAUDOWN-STREAM-ANA		50yr-24hr	0.00	92.00	95.00	0.0000	5	19.40	43.62	0.00	0.00
POA-BARINEAUDOWN-STREAM-ANA		50yr-2hr	0.00	92.00	95.00	0.0000	5	2.00	8.26	0.00	0.00
POA-BARINEAUDOWN-STREAM-ANA		50yr-4hr	0.00	92.00	95.00	0.0000	5	4.00	43.04	0.00	0.00
POA-BARINEAUDOWN-STREAM-ANA		50yr-8hr	0.00	92.00	95.00	0.0000	5	5.67	60.12	0.00	0.00
POA-BARINEAUDOWN-STREAM-ANA		5yr-1hr	0.00	92.00	95.00	0.0000	5	2.00	0.29	0.00	0.00
POA-BARINEAUDOWN-STREAM-ANA		5yr-24hr	0.00	92.00	95.00	0.0000	5	19.89	16.23	0.00	0.00
POA-BARINEAUDOWN-STREAM-ANA		5yr-2hr	0.00	92.00	95.00	0.0000	5	2.00	0.27	0.00	0.00
POA-BARINEAUDOWN-STREAM-ANA		5yr-4hr	0.00	92.00	95.00	0.0000	5	4.00	3.81	0.00	0.00
POA-BARINEAUDOWN-STREAM-ANA		5yr-8hr	0.00	92.00	95.00	0.0000	5	7.53	15.51	0.00	0.00
RAILROAD-1DOWN-STREAM-ANA		100yr-1hr	2.00	115.18	125.00	0.0004	7259	2.00	3.60	2.00	3.56
RAILROAD-1DOWN-STREAM-ANA		100yr-24hr	21.36	115.40	125.00	0.0016	18079	21.31	19.02	21.36	19.02
RAILROAD-1DOWN-STREAM-ANA		100yr-2hr	2.00	115.26	125.00	0.0005	10630	2.00	9.42	2.00	9.16
RAILROAD-1DOWN-STREAM-ANA		100yr-4hr	4.00	115.36	125.00	0.0006	16451	4.00	15.80	4.00	15.72
RAILROAD-1DOWN-STREAM-ANA		100yr-8hr	7.74	115.40	125.00	0.0006	18046	7.68	18.95	7.74	18.95
RAILROAD-1DOWN-STREAM-ANA		10yr-1hr	2.00	115.00	125.00	0.0000	115	2.00	0.00	0.00	0.00
RAILROAD-1DOWN-STREAM-ANA		10yr-24hr	19.92	115.31	125.00	-0.0047	14160	19.85	11.59	19.92	11.59
RAILROAD-1DOWN-STREAM-ANA		10yr-2hr	2.00	115.09	125.00	0.0004	3591	2.00	0.74	2.00	0.60
RAILROAD-1DOWN-STREAM-ANA		10yr-4hr	4.00	115.23	125.00	0.0005	9176	4.00	6.46	4.00	6.38
RAILROAD-1DOWN-STREAM-ANA		10yr-8hr	7.45	115.31	125.00	0.0042	14027	7.39	11.37	7.45	11.37
RAILROAD-1DOWN-STREAM-ANA		25yr-1hr	2.00	115.08	125.00	0.0005	3435	2.00	0.56	2.00	0.53
RAILROAD-1DOWN-STREAM-ANA		25yr-24hr	19.95	115.35	125.00	0.0034	15777	19.90	14.44	19.95	14.44
RAILROAD-1DOWN-STREAM-ANA		25yr-2hr	2.00	115.17	125.00	0.0004	6773	2.00	3.23	2.00	3.00
RAILROAD-1DOWN-STREAM-ANA		25yr-4hr	4.00	115.31	125.00	0.0012	14207	4.00	11.80	4.00	11.67
RAILROAD-1DOWN-STREAM-ANA		25yr-8hr	7.55	115.35	125.00	0.0009	16110	7.48	15.07	7.55	15.07
RAILROAD-1DOWN-STREAM-ANA		2yr-1hr	0.00	115.00	125.00	0.0000	117	0.00	0.00	0.00	0.00
RAILROAD-1DOWN-STREAM-ANA		2yr-24hr	22.08	115.17	125.00	0.0007	6872	22.04	3.11	22.08	3.11
RAILROAD-1DOWN-STREAM-ANA		2yr-2hr	0.00	115.00	125.00	0.0000	117	0.00	0.00	0.00	0.00
RAILROAD-1DOWN-STREAM-ANA		2yr-4hr	4.00	115.03	125.00	0.0005	1346	4.00	0.07	4.00	0.04
RAILROAD-1DOWN-STREAM-ANA		2yr-8hr	8.00	115.15	125.00	0.0005	6015	7.98	2.23	8.00	2.22
RAILROAD-1DOWN-STREAM-ANA		50yr-1hr	2.00	115.13	125.00	0.0005	5239	2.00	1.61	2.00	1.57
RAILROAD-1DOWN-STREAM-ANA		50yr-24hr	21.25	115.37	125.00	0.0018	16741	21.20	16.29	21.25	16.29
RAILROAD-1DOWN-STREAM-ANA		50yr-2hr	2.00	115.22	125.00	0.0004	8758	2.00	5.94	2.00	5.68
RAILROAD-1DOWN-STREAM-ANA		50yr-4hr	4.00	115.34	125.00	0.0007	15593	4.00	14.19	4.00	14.09
RAILROAD-1DOWN-STREAM-ANA		50yr-8hr	7.61	115.37	125.00	0.0006	16953	7.55	16.71	7.61	16.71
RAILROAD-1DOWN-STREAM-ANA		5yr-1hr	0.00	115.00	125.00	0.0000	117	0.00	0.00	0.00	0.00
RAILROAD-1DOWN-STREAM-ANA		5yr-24hr	21.17	115.25	125.00	0.0007	10102	21.14	8.08	21.17	8.08
RAILROAD-1DOWN-STREAM-ANA		5yr-2hr	2.00	115.01	125.00	0.0003	463	2.00	0.02	2.00	0.00
RAILROAD-1DOWN-STREAM-ANA		5yr-4hr	4.00	115.17	125.00	0.0005	6768	4.00	3.07	4.00	2.99
RAILROAD-1DOWN-STREAM-ANA		5yr-8hr	7.63	115.25	125.00	0.0005	10031	7.60	7.94	7.63	7.94
TRANS RDDOWN-STREAM-ANA		100yr-1hr	1.65	110.05	112.00	-0.0003	29260	1.53	2.94	1.65	2.89

Name	Group	Simulation	Max Time Stage hrs	Max Stage ft	Warning Stage ft	Max Delta Stage ft	Max Surf Area ft2	Max Time Inflow hrs	Max Inflow cfs	Max Time Outflow hrs	Max Outflow cfs
TRANS	RDDOWN-STREAM-ANA	100yr-24hr	15.36	110.23	112.00	-0.0008	34210	15.31	31.47	15.36	31.46
TRANS	RDDOWN-STREAM-ANA	100yr-2hr	2.00	110.18	112.00	-0.0006	32622	2.00	20.45	2.00	20.01
TRANS	RDDOWN-STREAM-ANA	100yr-4hr	3.35	110.29	112.00	-0.0039	36440	3.33	47.92	3.35	47.81
TRANS	RDDOWN-STREAM-ANA	100yr-8hr	5.21	110.32	112.00	-0.0032	37445	5.18	56.68	5.21	56.62
TRANS	RDDOWN-STREAM-ANA	10yr-1hr	2.00	110.02	112.00	0.0001	28399	2.00	0.55	2.00	0.50
TRANS	RDDOWN-STREAM-ANA	10yr-24hr	19.26	110.12	112.00	-0.0014	31088	19.17	11.51	19.26	11.50
TRANS	RDDOWN-STREAM-ANA	10yr-2hr	2.00	110.02	112.00	0.0000	28460	2.00	0.77	2.00	0.60
TRANS	RDDOWN-STREAM-ANA	10yr-4hr	3.90	110.10	112.00	-0.0006	30354	3.83	7.50	3.90	7.46
TRANS	RDDOWN-STREAM-ANA	10yr-8hr	5.49	110.14	112.00	-0.0004	31574	5.43	13.87	5.49	13.82
TRANS	RDDOWN-STREAM-ANA	25yr-1hr	2.00	110.02	112.00	0.0001	28428	2.00	0.61	2.00	0.55
TRANS	RDDOWN-STREAM-ANA	25yr-24hr	16.25	110.15	112.00	-0.0023	31899	16.22	16.04	16.25	16.04
TRANS	RDDOWN-STREAM-ANA	25yr-2hr	2.00	110.06	112.00	0.0002	29486	2.00	4.38	2.00	3.75
TRANS	RDDOWN-STREAM-ANA	25yr-4hr	3.60	110.18	112.00	-0.0024	32638	3.54	20.15	3.60	20.10
TRANS	RDDOWN-STREAM-ANA	25yr-8hr	5.32	110.23	112.00	-0.0006	34179	5.27	30.72	5.32	30.64
TRANS	RDDOWN-STREAM-ANA	2yr-1hr	2.00	110.01	112.00	0.0002	28333	2.00	0.43	2.00	0.37
TRANS	RDDOWN-STREAM-ANA	2yr-24hr	22.13	110.03	112.00	0.0001	28766	22.09	1.46	22.13	1.46
TRANS	RDDOWN-STREAM-ANA	2yr-2hr	2.00	110.01	112.00	0.0001	28344	2.00	0.46	2.00	0.39
TRANS	RDDOWN-STREAM-ANA	2yr-4hr	4.00	110.02	112.00	0.0000	28467	4.00	0.66	4.00	0.64
TRANS	RDDOWN-STREAM-ANA	2yr-8hr	7.98	110.02	112.00	-0.0001	28570	7.98	0.92	7.98	0.90
TRANS	RDDOWN-STREAM-ANA	50yr-1hr	2.00	110.03	112.00	0.0001	28633	1.97	1.03	2.00	1.01
TRANS	RDDOWN-STREAM-ANA	50yr-24hr	15.45	110.19	112.00	-0.0029	32940	15.40	22.59	15.45	22.58
TRANS	RDDOWN-STREAM-ANA	50yr-2hr	2.00	110.11	112.00	-0.0003	30859	2.00	10.55	2.00	9.94
TRANS	RDDOWN-STREAM-ANA	50yr-4hr	3.47	110.22	112.00	0.0004	34045	3.43	29.63	3.47	29.56
TRANS	RDDOWN-STREAM-ANA	50yr-8hr	5.27	110.27	112.00	-0.0005	35482	5.24	40.50	5.27	40.45
TRANS	RDDOWN-STREAM-ANA	5yr-1hr	2.00	110.02	112.00	0.0002	28372	2.00	0.50	2.00	0.44
TRANS	RDDOWN-STREAM-ANA	5yr-24hr	19.32	110.09	112.00	-0.0011	30200	19.27	7.00	19.32	6.99
TRANS	RDDOWN-STREAM-ANA	5yr-2hr	2.00	110.02	112.00	0.0000	28382	2.00	0.53	2.00	0.46
TRANS	RDDOWN-STREAM-ANA	5yr-4hr	4.00	110.04	112.00	0.0001	29055	4.00	2.36	4.00	2.25
TRANS	RDDOWN-STREAM-ANA	5yr-8hr	6.38	110.09	112.00	-0.0020	30216	6.31	6.90	6.38	6.90

7. Project Maps and Details

1.0) Survey of Project Area
2.0) Existing Conditions On-Site Basin Map
2.1) Post-Development On-Site Basin Map
3.0) Overall Drainage Basin Map
4.0) Required Modification to SWMF
4.1) Required Modification to SWMF
4.2) Required Modification to SWMF

TOPOGRAPHIC SURVEY

SECTION 26, TOWNSHIP 1 NORTH, RANGE 2 WEST, LEON COUNTY, FLORIDA

SOUTHEASTERN SURVEYING LINETYPE LEGEND:

- BEL — BURIED ELECTRIC LINE
- BTL — BURIED TELEPHONE LINE
- G — GAS LINE
- OHL — OVERHEAD UTILITY LINE
- WL — WATER LINE
- SS — SANITARY SEWER
- UNK — UNKNOWN UTILITY LINE

STANDARD ABBREVIATIONS:

#000	PROFESSIONAL LAND SURVEY CERTIFICATE
A/C	AIR CONDITIONER
CMP	CORRUGATED METAL PIPE
E	EAST
EL.	ELEVATION
FCM	FOUND 4"x4" CONCRETE MONUMENT
FFE	FINISHED FLOOR ELEVATION
FIR	FOUND IRON ROD (AS LABELED)
FIRC	FOUND IRON ROD W/ CAP (AS LABELED)
INV.	INVERT
N	NORTH
OU	OVERHEAD UTILITY
PVC	POLYVINYL CHLORIDE PIPE
R-	RANGE
RCP	REINFORCED CONCRETE PIPE
S	SOUTH
SEC.	SECTION
T-	TOWNSHIP
W	WEST

SYMBOL LEGEND

- FOUND IRON ROD (AS LABELED)
- FOUND CONCRETE MONUMENT (AS LABELED)
- UTILITY POLE
- GUY WIRE ANCHOR
- LIGHT POLE
- ELECTRIC BOX
- ELECTRIC METER
- ELECTRIC TRANSFORMER
- FIRE HYDRANT
- WATER VALVE
- WATER METER
- BACKFLOW PREVENTER
- SIAMESE CONNECTION
- POST INDICATOR VALVE
- WATER WELL
- WATER SPIGOT
- WATER SERVICE
- SPRINKLER HEAD
- IRRIGATION CONTROL VALVE
- MONITORING WELL
- SANITARY SEWER MANHOLE
- SEWER VALVE
- SEWER CLEANOUT
- CATCH BASIN
- STORM MANHOLE
- STORMWATER CLEAN OUT
- TELEPHONE PEDESTAL
- TELEPHONE BOX
- FIBER OPTIC SIGN
- GAS METER
- GAS VALVE
- BOLLARD
- SINGLE SUPPORT SIGN

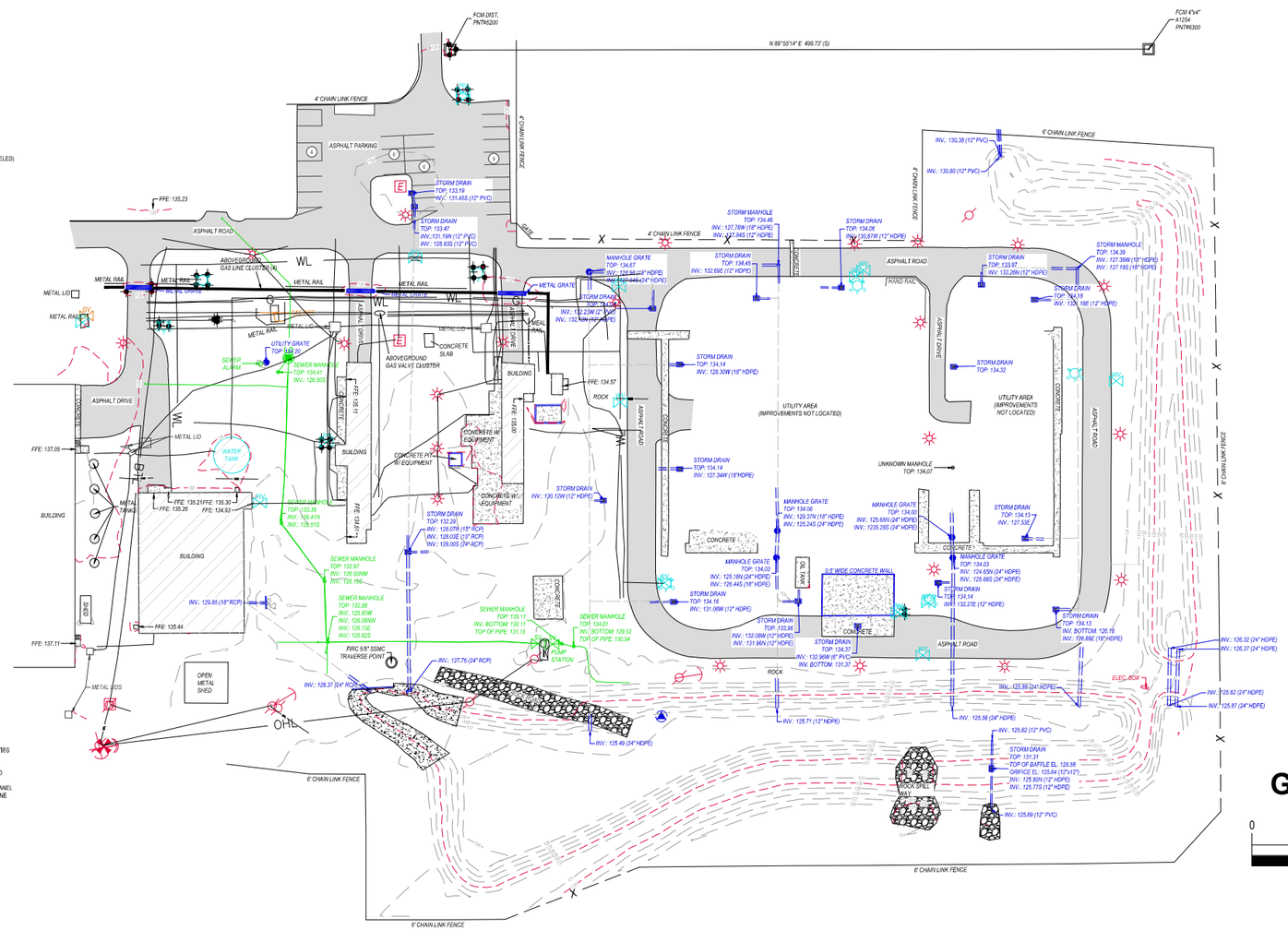

GENERAL NOTES:

1. NO IMPROVEMENTS LOCATED OTHER THAN SHOWN HEREON.
2. ELEVATIONS ARE BASED ON NAVD 88 DATUM.
3. THIS IS NOT A BOUNDARY SURVEY.
4. ADDITIONS OR DELETIONS TO SURVEY MAP OR REPORT BY OTHER THAN THE SIGNING PARTY OR PARTIES IS PROHIBITED WITHOUT WRITTEN CONSENT OF THE SIGNING PARTY OR PARTIES.
5. ALL UTILITIES SHOWN HEREON ARE BASED ON SURFACE EVIDENCE. ANY UTILITIES NOT SHOWN ARE LACKING SURFACE EVIDENCE TO MAKE A DETERMINATION OF LOCATION IN THE FIELD. UNDERGROUND UTILITY LINES SHOWN PROVIDED BY SOUTHEASTERN SURVEYING.
6. BASED ON THE NATIONAL FLOOD INSURANCE PROGRAM, FLOOD INSURANCE RATE MAP COMMUNITY PANEL NUMBER 12073C 0259 F, DATED AUGUST 18, 2009 THE ABOVE DESCRIBED PROPERTY IS LOCATED IN ZONE "X" (AREAS DETERMINED TO BE OUTSIDE 500-YEAR FLOODPLAIN.)

GRAPHIC SCALE

0 50 40 200

1 ▯▯▯ = 100 ▯▯.

©Moore Bass Consulting

C:\Projects\R83.001\Workfiles\EMP\R83.001-SURVEY-HOPKINS-2017.02.21.dwg, 1.0 (11x17), jimoore, Mar 29, 2017 - 3:21:42pm

Moore Bass CONSULTING
TALLAHASSEE ATLANTA
www.moorebass.com
25 YEARS

PROJECT NAME
HOPKINS ELECTRIC PLANT
RICE PROJECT

CLIENT NAME
Sargent & Lundy, LLC

REVISIONS

R83.001-SURVEY-HOPKINS-2017.02.21	
FIELD DATE	02/21/17
FIELD BOOK/PAGE	N/A
FILE #	16-304
CONTRACT #	R83.001
DRAWN BY	MA

The Drawings, Specifications and other documents prepared by Moore Bass Consulting, Inc. (MB) for this Project are instruments of MB for use solely with respect to this Project and, unless otherwise provided, MB shall be deemed the author of these documents and shall retain all common law, statutory and other reserved rights, including the copyright.

UNLESS IT BEARS THE SIGNATURE AND THE ORIGINAL RAISED SEAL OF A FLORIDA LICENSED SURVEYOR AND MAPPER THIS DRAWING, SKETCH, PLAT, OR MAP IS FOR INFORMATION PURPOSES ONLY AND IS NOT VALID.

SEAL

805 N. GADSDEN STREET
TALLAHASSEE, FL 32303
(850) 222-5678
CERTIFICATE OF
AUTHORIZATION NO. 00007245

SHEET TITLE
SURVEY
OF
PROJECT AREA

SHEET
1.0

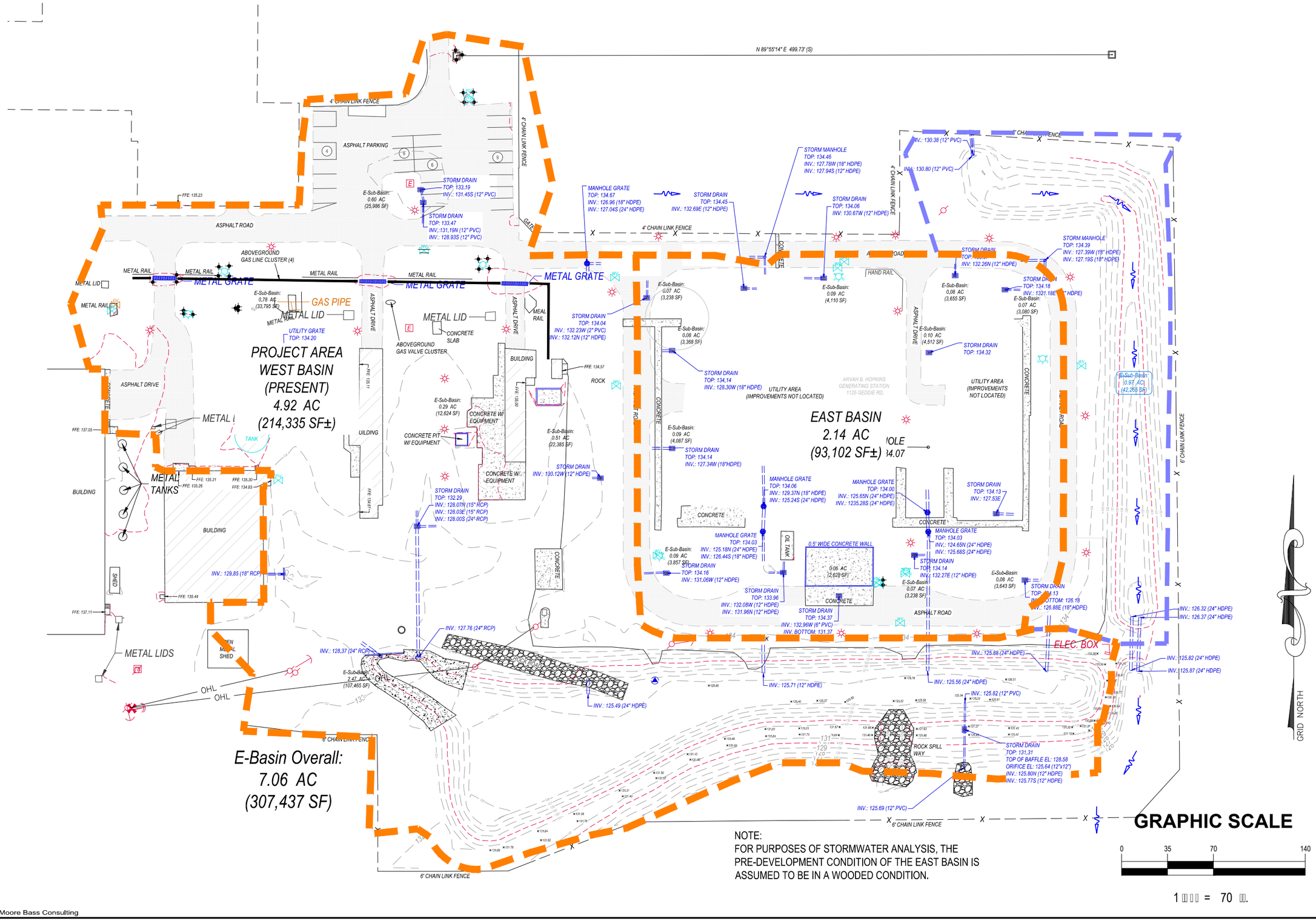

NOTE:
FOR PURPOSES OF STORMWATER ANALYSIS, THE PRE-DEVELOPMENT CONDITION OF THE EAST BASIN IS ASSUMED TO BE IN A WOODED CONDITION.

©Moore Bass Consulting

C:\Projects\R83.001\Workfiles\EMP\R83.001-EMP-HOPKINS.dwg, 2.0(E-BASIN) (11X17), jjmoore, Mar 29, 2017 - 3:22:00pm

Moore Bass CONSULTING
TALLAHASSEE ATLANTA
www.moorebass.com
25 YEARS

PROJECT NAME
HOPKINS ELECTRIC PLANT
RICE PROJECT

CLIENT NAME
Sargent & Lundy, LLC

REVISIONS

R83.001-EMP-HOPKINS

ARCHIVE	
DATE	03/28/17
FILE #	16-304
CONTRACT #	R83.001
DRAWN BY	JM

The Drawings, Specifications and other documents prepared by Moore Bass Consulting, Inc. (MB) for this Project are instruments of MB for use solely with respect to this Project and, unless otherwise provided, MB shall be deemed the author of these documents and shall retain all common law, statutory and other reserved rights, including the copyright.

SEAL

SHEET TITLE
EXISTING CONDITIONS ON-SITE BASIN MAP

SHEET
2.0

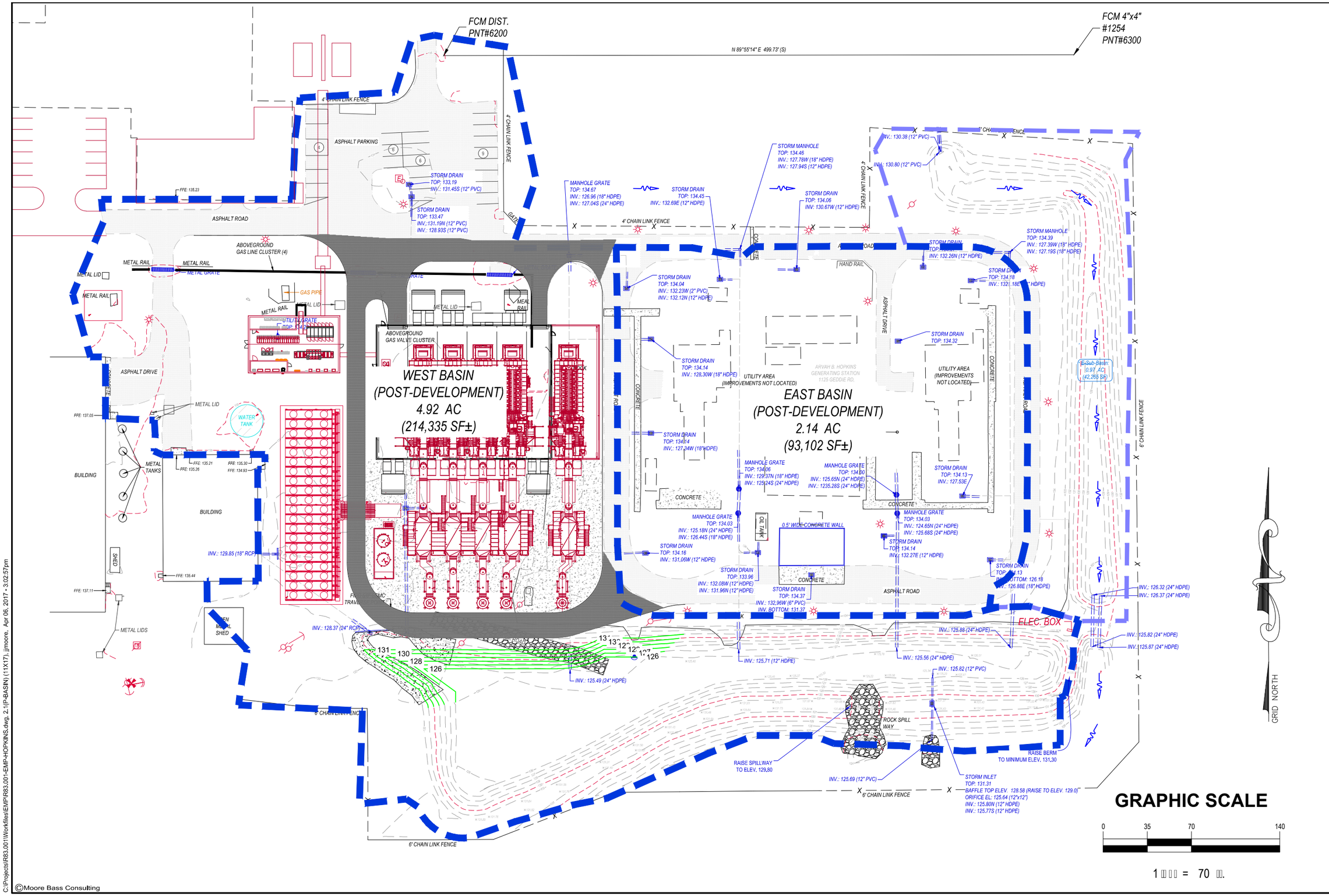

©Moore Bass Consulting

C:\Projects\R83.001\Workfiles\EMP\R83.001-EMP-HOPKINS.dwg, 2.1(P-BASIN) (11X17), jjmoore, Apr 06, 2017 - 3:02:57pm

Moore Bass Consulting
TALLAHASSEE ATLANTA
www.moorebass.com
25 YEARS

PROJECT NAME
HOPKINS ELECTRIC PLANT
RICE PROJECT

CLIENT NAME
Sargent & Lundy, LLC

REVISIONS

R83.001-EMP-HOPKINS

ARCHIVE	
DATE	04/05/17
FILE #	16-304
CONTRACT #	R83.001
DRAWN BY	JM

The Drawings, Specifications and other documents prepared by Moore Bass Consulting, Inc. (MB) for this Project are instruments of MB for use solely with respect to this Project and, unless otherwise provided, MB shall be deemed the author of these documents and shall retain all common law, statutory and other reserved rights, including the copyright.

SEAL

SHEET TITLE
POST DEVELOPMENT ON-SITE BASIN MAP

SHEET
2.1

BETHEL CHURCH ROAD BASIN 31.48 ac ±

BETHEL CHURCH

INV.: 148.80S (24" CMP)

INV.: 148.20N (24" CMP)

OFF-SITE NORTH BASIN 124.25 AC.± (5,412,161 SF ±)

D-3

ON-SITE EAST BASIN 2.14 AC±

ARVAH B. HOPKINS GENERATING STATION

EXISTING RAILROAD

EXISTING 42" RCP CULVERT UNDER RAILROAD

INV.: 115.80NE (42" RCP)

INV.: 115.88SW (42" RCP)

CONFLUENCE SUB-BASIN 23.28 AC.± (1,014,149 SF ±)

RAILROAD-1

C-3

C-2

C-1

EXISTING DIRT ROAD/ TRANSMISSION LINES PATH

ON-SITE WEST BASIN 4.92 AC±

OVERALL BASIN TO THE EXISTING SWF ACREAGE: 7.06 AC (307,437 SF ±)

EXISTING WASTE WATER PONDS

B-3

B-2

B-2 SUB-BASIN 83.66 AC.± (3,644,255 SF ±)

TRANSMISSION PATH (DIRT)RD SUB-BASIN 67.11 AC.± (2,923,173 SF ±)

OFF-SITE SOUTH BASIN 219.33 AC.± (9,554,130 SF ±)

A-2

WEST BRANCH GUM CREEK

EXISTING 7.7' X 4' BOX CULVERT UNDER BARINEAU RD

BARINEAU RD SUB-BASIN 38.94 AC.± (1,696,381 SF ±)

BARINEAU RD

A-1

POA

INV.: 93.36 7.7'x4' BOX CULVERT

INV.: 93.64 7.7'x4' BOX CULVERT

EXISTING DIRT ROAD/ TRANSMISSION LINES PATH

JORDANS PASS DR

SHIELDS LN

COMANCHE LN

BETHEL CHURCH RD

TENNESSEE STATE HWY 20

RAIL ROAD

GEDDE ROAD

BLOUNTSTOWN HWY

BARINEAU ROAD

LEGEND

	DRAINAGE BASIN LINES
	SUB-BASIN LINES (OFF-SITE)
	ON-SITE BASINS
NODE	LINK-NODE

NOT TO SCALE

GRID NORTH

©Moore Bass Consulting

C:\Projects\R83.001\Workfiles\EMP\R83.001-HOPKINS-GIS.dwg, GISE-BASIN 300 (NTS), jimoore, Mar 29, 2017 - 3:23:48pm

Moore Bass CONSULTING
TALLAHASSEE ATLANTA
www.moorebass.com
25 YEARS

PROJECT NAME
HOPKINS ELECTRIC PLANT
RICE PROJECT

CLIENT NAME
Sargent & Lundy, LLC

REVISIONS

MB

R83.001-HOPKINS-GIS

DATE	03/28/17
FILE #	16-304
CONTRACT #	R83.001
DRAWN BY	JM

The Drawings, Specifications and other documents prepared by Moore Bass Consulting, Inc. (MB) for this project are instruments of MB in which MB has rights with respect to this Project and, unless otherwise provided, MB shall be deemed the author of these documents and shall retain all common law, statutory and other reserved rights, including the copyright.

805 N. GADSDEN STREET
TALLAHASSEE, FL 32303
CERTIFICATE OF AUTHORIZATION NO. 00006109

SEAL

SHEET TITLE

OVERALL DRAINAGE BASIN MAP

SHEET

3.0

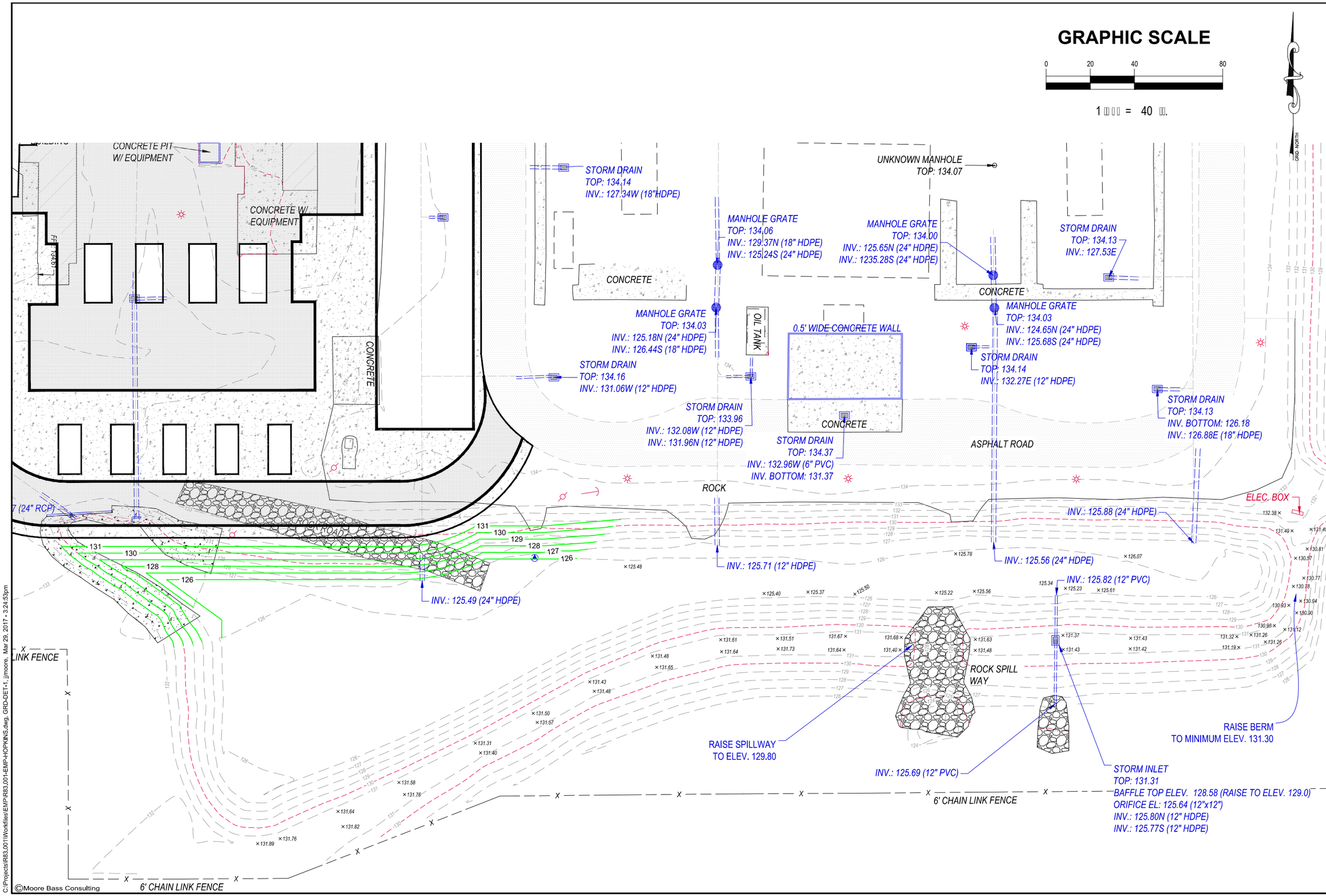

C:\Projects\R83.001\Workfiles\EMP\R83.001-EMP-HOPKINS.dwg, GRD-DET-1, jimoore, Mar 29, 2017 - 3:24:53pm

Moore Bass CONSULTING
TALLAHASSEE ATLANTA
www.moorebass.com
25 YEARS

PROJECT NAME
HOPKINS ELECTRIC PLANT
RICE PROJECT
CLIENT NAME
Sargent & Lundy, LLC

REVISIONS

R83.001-EMP-HOPKINS

ARCHIVE	
DATE	03/28/17
FILE #	16-304
CONTRACT #	R83.001
DRAWN BY	JM

The Drawings, Specifications and other documents prepared by Moore Bass Consulting, Inc. (MB) for this Project are instruments of MB for use solely with respect to this Project and, unless otherwise provided, MB shall be deemed the author of these documents and shall retain all common law, statutory and other reserved rights, including the copyright.

SEAL

SHEET TITLE
REQUIRED MODIFICATION TO SWMF

SHEET
4.0

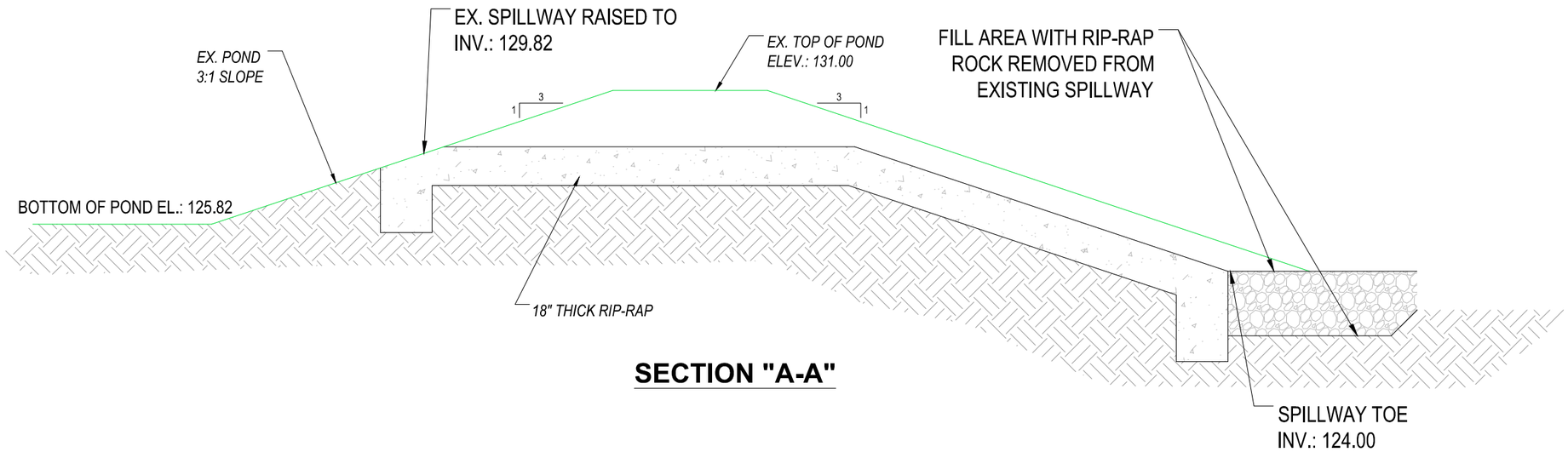

SECTION "A-A"

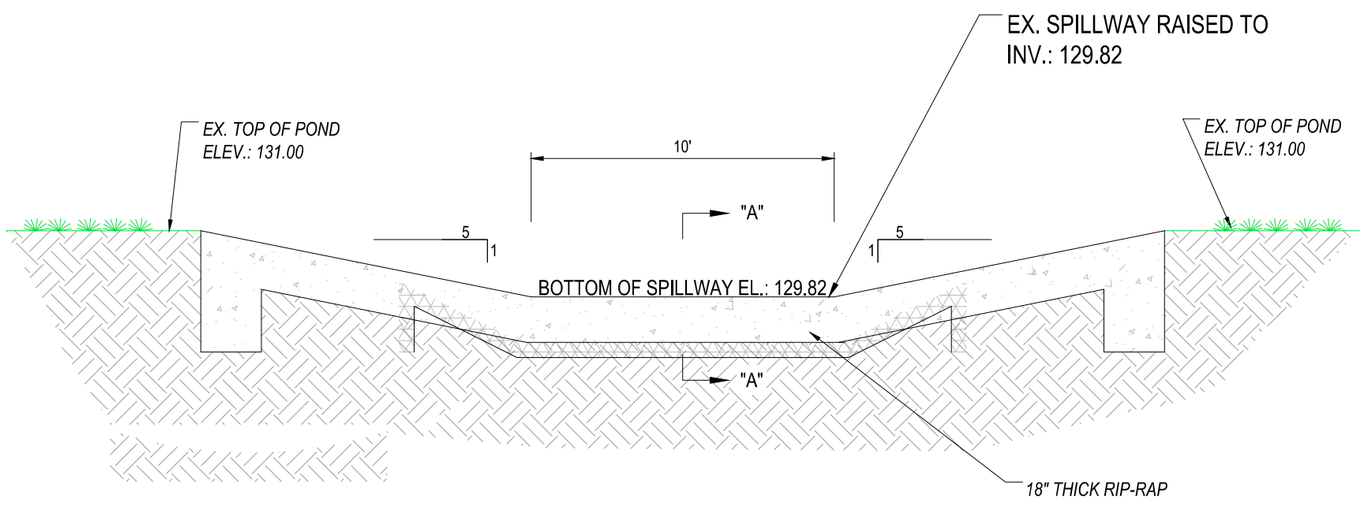

SCHEMATIC DETAIL FOR MODIFICATION TO EMERGENCY SPILLWAY

SCALE: 1" = 5'

©Moore Bass Consulting

C:\Projects\R83.001\Workfiles\EMP\R83.001-EMP-HOPKINS.dwg, GRD-DET-2, jimoore, Mar 29, 2017 - 3:25:14pm

Moore Bass CONSULTING
TALLAHASSEE ATLANTA
www.moorebass.com
25 YEARS

PROJECT NAME
HOPKINS ELECTRIC PLANT
RICE PROJECT
CLIENT NAME
Sargent & Lundy, LLC

REVISIONS

R83.001-EMP-HOPKINS

ARCHIVE	
DATE	03/28/17
FILE #	16-304
CONTRACT #	R83.001
DRAWN BY	JM

The Drawings, Specifications and other documents prepared by Moore Bass Consulting, Inc. (MB) for this Project are instruments of MB for use solely with respect to this Project and, unless otherwise provided, MB shall be deemed the author of these documents and shall retain all common law, statutory and other reserved rights, including the copyright.

SEAL

SHEET TITLE
REQUIRED MODIFICATION TO SWMF

SHEET
4.1

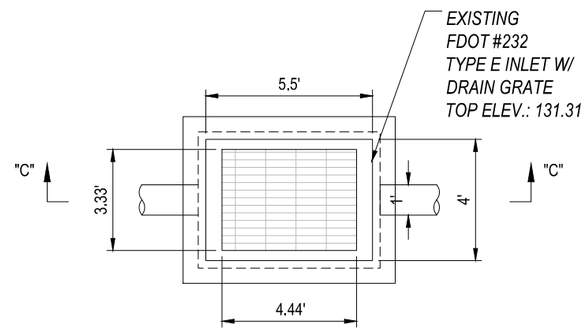

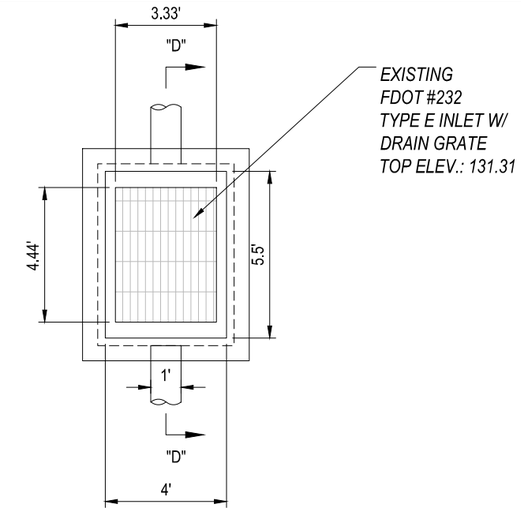

PLAN VIEW

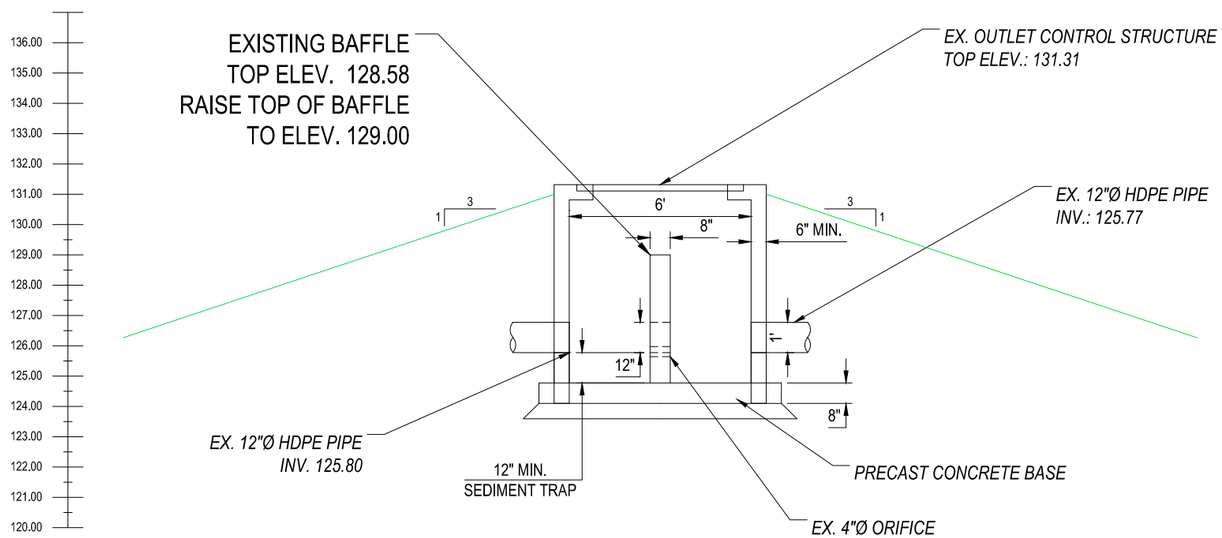

SECTION "C-C"

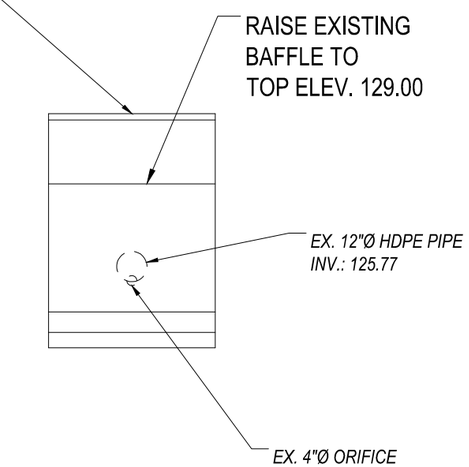

SECTION "D-D"

SCHEMATIC DETAIL FOR MODIFICATION TO OUTFALL STRUCTURE

SCALE: 1" = 5'

©Moore Bass Consulting

C:\Projects\R83.001\Workfiles\EMP\R83.001-EMP-HOPKINS.dwg, GRD-DET-3, jjmoore, Mar 29, 2017 - 3:25:33pm

Moore Bass CONSULTING
TALLAHASSEE ATLANTA
www.moorebass.com
25 YEARS

PROJECT NAME
HOPKINS ELECTRIC PLANT
RICE PROJECT
CLIENT NAME
Sargent & Lundy, LLC

REVISIONS

R83.001-EMP-HOPKINS

ARCHIVE	
DATE	03/28/17
FILE #	16-304
CONTRACT #	R83.001
DRAWN BY	JM

The Drawings, Specifications and other documents prepared by Moore Bass Consulting, Inc. (MB) for this Project are instruments of MB for use solely with respect to this Project and, unless otherwise provided, MB shall be deemed the author of these documents and shall retain all common law, statutory and other reserved rights, including the copyright.

SEAL

SHEET TITLE
REQUIRED MODIFICATION TO SWMF

SHEET
4.2

APPENDIX C

NOISE SOURCES

Appendix C. City of Tallahasee Hopkins Equipment Noise Sources and Noise Controls

Equipment ID	Quantity	Noise Source Type	Levels at Octave Band Centre Frequencies									dBA	dB	Source
			31.5	63	125	250	500	1000	2000	4000	8000			
Gas Combustion Turbine and Generator														
Wartsila Engine	4	Lw	0	87	108	115	120	122	124	120	112	128.2	130.7	Wartsila W18V46/50DF/50SG - 11/25/16
Wartsial Exhaust	4	Lw	120	121	125	133	133	135	139	117	0	142.0	159.8	Wartsila W18V46/50DF/50SG - 11/25/16
Wartsila Charge Intake	4	Lw	79	89	92	95	108	125	135	136	134	140.0	139.7	Wartsila W18V46/50DF/50SG - 11/25/16
50Hz Starndard - 6 fan	3 sets	Lw	79	79	87	96	100	102	100	97	94	106.8	119.2	Wartsila W18V46/50DF/50SG - 11/25/16
Sound Reduciton Indicies														
Engine Building			0	0	35	41	48	54	60	58	0	52.0		Golder 2017
Exhaust Silencer			3	10	30	37	36	32	30	30	33	32.0		Golder 2017
Inlet Silencer			6	8	14	22	29	30	24	20	13	28.0		Golder 2017

Established in 1960, Golder Associates is a global, employee-owned organization that helps clients find sustainable solutions to the challenges of finite resources, energy and water supply and management, waste management, urbanization, and climate change. We provide a wide range of independent consulting, design, and construction services in our specialist areas of earth, environment, and energy. By building strong relationships and meeting the needs of clients, our people have created one of the most trusted professional services organizations in the world.

Africa	+ 27 11 254 4800
Asia	+ 852 2562 3658
Australasia	+ 61 3 8862 3500
Europe	+ 356 21 42 30 20
North America	+ 1 800 275 3281
South America	+ 56 2 2616 2000

solutions@golder.com
www.golder.com

Golder Associates Inc.
6026 NW 1st Place
Gainesville, FL 32607 USA
Tel: (352) 336-5600
Fax: (352) 336-6603

Golder Associates

Engineering Earth's Development, Preserving Earth's Integrity

Golder, Golder Associates and the GA globe design are trademarks of Golder Associates Corporation