From:	Boggs, Ashley
To:	SCO
Cc:	Vitola, Natalie; Renfranz, John; Cocotos, Peter; Kowalczyk, Gary
Subject:	Manatee Plant Amendment
Date:	Monday, May 9, 2022 5:16:26 PM
Attachments:	Manatee Plant Post-Certification Amendment_Dumpster Loading Area_5.9.22.pdf

EXTERNAL MESSAGE
This email originated outside of DEP. Please use caution when opening attachments, clicking links, or responding to this email.

Hello Cindy,

Attached is an amendment request to the Manatee Plant PA 02-44. Please let me know if you have any comments or questions.

Thank you,

Ashley Boggs
Ashley.Boggs@fpl.com
Florida Power & Light|Environmental Services
700 Universe Blvd|JES/JB C5073
Juno Beach FL, 33408
C. 561.846.2601

Please consider the environment before printing this email

May 4, 2022

Ms. Cindy Mulkey
Siting Coordination Office
Florida Department of Environmental Protection
2600 Blair Stone Rd. MS 5500
Tallahassee, Florida 32399-2400

RE: Florida Power & Light Company
Manatee Plant
Power Plant Site Certification No. PA 02-44
Post Certification Amendment – Dumpster Access Ramp

Dear Ms. Mulkey:

Florida Power & Light Company (FPL) requests a post-certification amendment to the Site Certification Application for FPL's Manatee Plant, pursuant to S. 403.5113, Florida Statutes, and Rule 62-17.205(1), Florida Administrative Code. The purpose of this amendment request is to obtain approval to construct a dumpster access ramp.

The proposed dumpster access ramp will be located within the certified boundary in an area already assumed to be impervious in the original certification and will not alter the stormwater calculations. The proposed dumpster access ramp construction drawings are provided in attachment A.

Thank you for your attention and consideration of FPL's request to amend the Site Certification. If you have any questions regarding this amendment, please contact me at (561) 846-2601.

Sincerely,
Florida Power & Light Company

Ashley Boggs

Ashley Boggs
Associate Environmental Specialist
(561) 846-2601
Ashley.Boggs@fpl.com

Enclosures: Attachment A – Dumpster Access Ramp Drawings

CC: Gary Kowalczyk, FPL – PGD Regional Plant General Manager
Peter Cocotos, FPL – Legal
Natalie Vitola, FPL – Environmental
John Renfranz, FPL – Environmental

ATTACHMENT A

DUMPSTER ACCESS RAMP DRAWINGS

FLORIDA POWER & LIGHT

MANATEE PLANT

95% SUBMITTAL

19052 FL-62
PARRISH, FL 34219
WILLIAM VICKERS - PROJECT MANAGER P-941-776-5265
WILLIAM.VICKERS@FPL.COM

DUMPSTER LOADING AREA

ENGINEERING PROJECT NO. 19-581

MARCH 2022

REVISION & SUBMITTAL SCHEDULE

Rev #	SUBMITTAL DATE	DESCRIPTION
	12/18/2019	SUBMITTED DRAWING PACKAGE: SHEETS 1-11
REV 1	DATE	DESCRIPTION OF REVISIONS

LAT.: 26.77695 N; 26° 46' 37.02" N
LONG.: 80.051639 W; 80° 03' 05.90" W

STATE OF FLORIDA
NOT TO SCALE

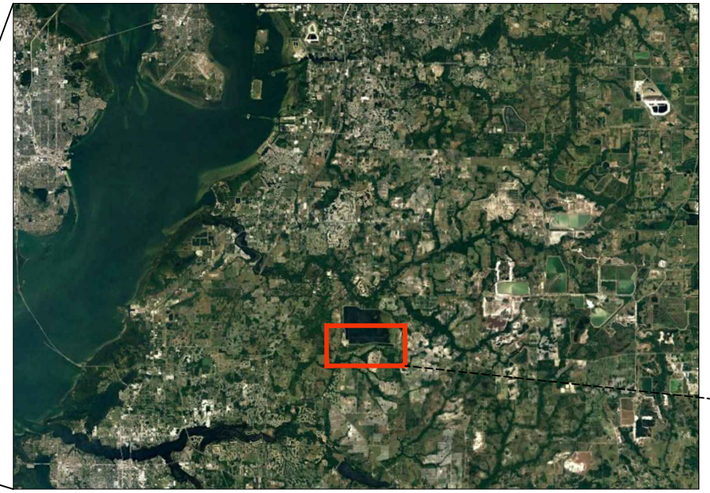

CUTCHER & ASSOCIATES, INC.
COASTAL ENGINEERS

725 N HWY A1A STE D101
JUPITER, FLORIDA 33477
Ph: (561)748-6745
Email: depth@gate.net
P.E. No.: 50722 /
Auth.Cert.No.: 8641

CUTCHER & ASSOCIATES DRAWINGS

SHEET NO.	TITLE
SHEET 1	COVER PAGE
SHEET 2	SITE IMAGE - LIDBERG SITE SURVEY - FPL MANATEE PLANT
SHEET 3	SITE PLAN - PROPOSED DUMPSTER LOADING AREA
SHEET 4	SECTION VIEW - THRU DUMPSTER LOADING AREA
SHEET 5	ELEVATION VIEW & PARTIAL ELEVATION VIEW - DUMPSTER LOADING AREA & RAMP REINFORCEMENT
SHEET 6	SECTION VIEW - THRU RAMP & CONCRETE SLAB
SHEET 7	SECTION VIEW - THRU RAMP & THRU RAMP W/SCUPPER
SHEET 8	SECTION VIEW - REINFORCEMENT THRU RAMP & SECTION VIEW - STEEL REINFORCEMENT
SHEET 9	SECTION VIEW - COLUMN, PIPE & SAFETY RAIL ATTACHMENT & SECTION VIEW - COLUMN & PIPE ATTACHMENT
SHEET 10	SECTION VIEW - BEAM TO COLUMN ATTACHMENT & SECTION VIEW - BEAM TO COLUMN W/GUSSET PLATE ATTACHMENT
SHEET 11	SECTION VIEW - COLUMN TO BASE PLATE ATTACHMENT & SECTION VIEW - PIPE TO BASE PLATE ATTACHMENT
SHEET 12	SECTION VIEW - PIPE TO PIPE ATTACHMENT & SECTION VIEW - BEAM TO PIPE ATTACHMENT
SHEET 13	DEATIL & SECTION VIEW - MOUNT BRACKET
SHEET 14	MATERIAL SPECIFICATIONS
SHEET 15	MATERIAL SPECIFICATIONS

LIDBERG LAND SURVEYING INC.

DATE	DESCRIPTION
OCTOBER 31,2019	TOPOGRAPHIC SURVEY - FPL MANATEE PLANT
-	-

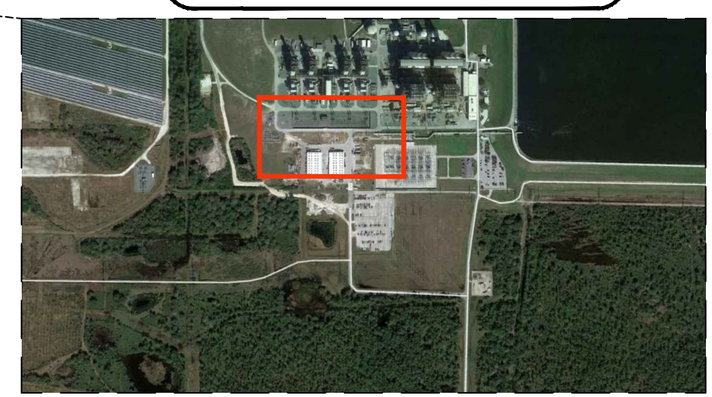

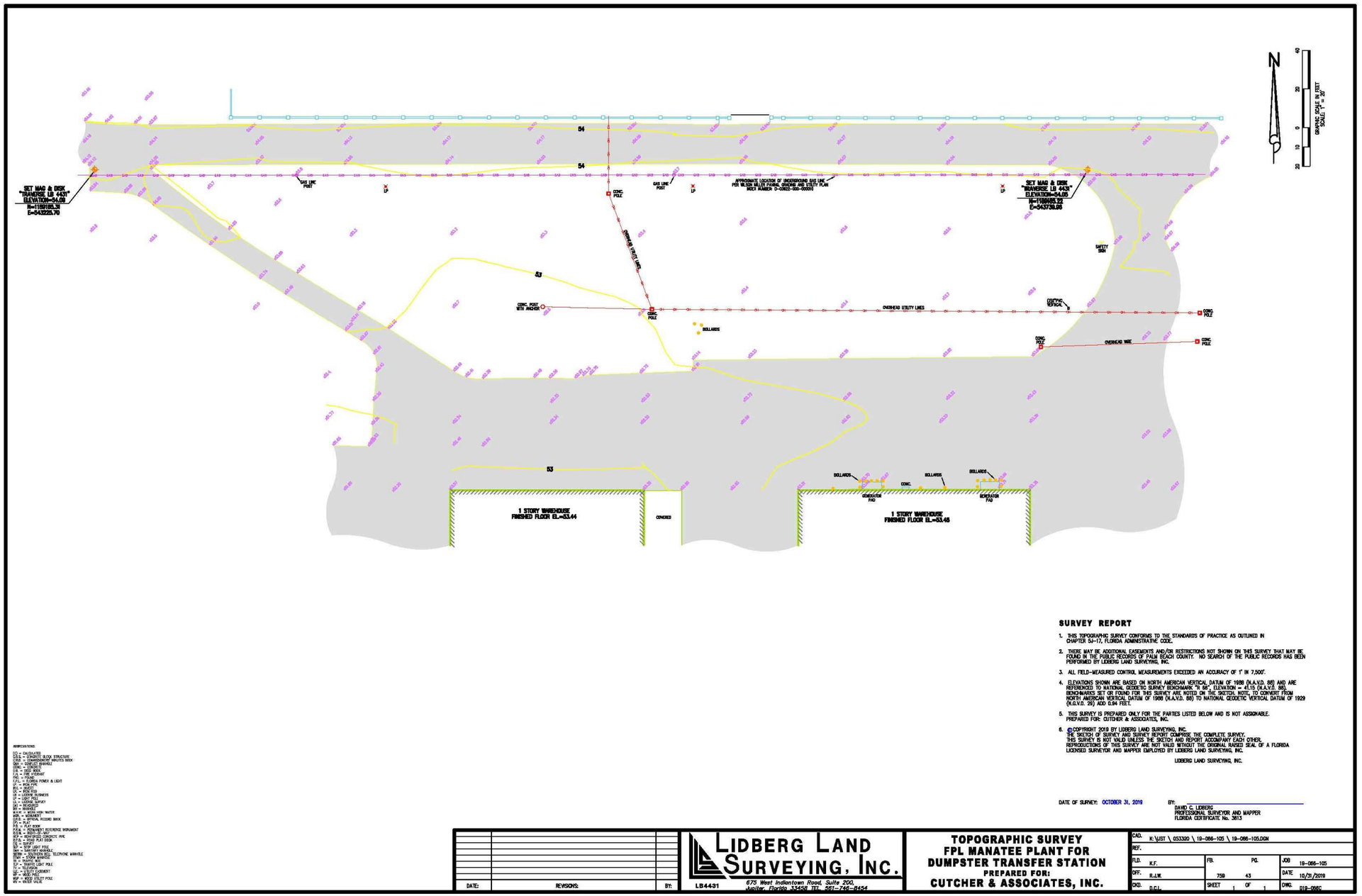

ABBREVIATIONS:
CALC = CALCULATED
CBS = CONCRETE BLOCK STRUCTURE
CMP = CORRUGATED METAL PIPE
DMH = MANHOLE MANHOLE
CONC = CONCRETE
CL = CENTERLINE
FH = FIRE HYDRANT
FND = FOUND
F.P.L. = FLORIDA POWER & LIGHT
INV = INVERT
IRC = IRRIGATION
LP = LIGHT POLE
LS = LICENSE SURVEY
MH = MANHOLE
MM = MONUMENT
M.H.W. = MEAN HIGH WATER
N&D = NAIL & DISK
OPR = OFFICIAL RECORD BOOK
PP = PLAT
PB = PLAT BOOK
P.R.M. = PERMANENT REFERENCE MONUMENT
P.C.P. = PERMANENT CONTROL POINT
PVC = POLYVINYL CHLORIDE PIPE
RCP = REINFORCED PIPE
SEC = SECTION
SLP = STOP LIGHT POLE
SWPPP = SURFACE WATER POLLUTION PREVENTION PLAN
TELE MH = TELEPHONE MANHOLE
STORM MANHOLE
TP = TRAFFIC POLE
UP = UTILITY POLE
TV = TELEVISION
UE = UTILITY EASEMENT
WM = WATER METER
WVP = WOOD UTILITY POLE
WV = WATER VALVE

SURVEY REPORT

1. THIS TOPOGRAPHIC SURVEY CONFORMS TO THE STANDARDS OF PRACTICE AS OUTLINED IN CHAPTER 5J-17, FLORIDA ADMINISTRATIVE CODE.
2. THERE MAY BE ADDITIONAL EASEMENTS AND/OR RESTRICTIONS NOT SHOWN ON THIS SURVEY THAT MAY BE FOUND IN THE PUBLIC RECORDS OF PALM BEACH COUNTY. NO SEARCH OF THE PUBLIC RECORDS HAS BEEN PERFORMED BY LIDBERG LAND SURVEYING, INC.
3. ALL FIELD-MEASURED CONTROL MEASUREMENTS EXCEEDED AN ACCURACY OF 1' IN 7,500'.
4. ELEVATIONS SHOWN ARE BASED ON NORTH AMERICAN VERTICAL DATUM OF 1988 (N.A.V.D. 88) AND ARE REFERENCED TO NATIONAL GEODETIC SURVEY BENCHMARK "R 69", ELEVATION = 41.15 (N.A.V.D. 88). BENCHMARKS SET OR FOUND FOR THIS SURVEY ARE NOTED ON THE SKETCH. NOTE, TO CONVERT FROM NORTH AMERICAN VERTICAL DATUM OF 1988 (N.A.V.D. 88) TO NATIONAL GEODETIC VERTICAL DATUM OF 1929 (N.G.V.D. 29) ADD 0.94 FEET.
5. THIS SURVEY IS PREPARED ONLY FOR THE PARTIES LISTED BELOW AND IS NOT ASSIGNABLE. PREPARED FOR: CUTCHER & ASSOCIATES, INC.
6. ©COPYRIGHT 2019 BY LIDBERG LAND SURVEYING, INC.
THE SKETCH OF SURVEY AND SURVEY REPORT COMPRISE THE COMPLETE SURVEY. THIS SURVEY IS NOT VALID UNLESS THE SKETCH AND REPORT ACCOMPANY EACH OTHER. REPRODUCTIONS OF THIS SURVEY ARE NOT VALID WITHOUT THE ORIGINAL RAISED SEAL OF A FLORIDA LICENSED SURVEYOR AND MAPPER EMPLOYED BY LIDBERG LAND SURVEYING, INC.

LIDBERG LAND SURVEYING, INC.

DATE OF SURVEY: OCTOBER 31, 2019

BY: DAVID C. LIDBERG
PROFESSIONAL SURVEYOR AND MAPPER
FLORIDA CERTIFICATE No. 3813

DATE:	REVISIONS:	BY:

LIDBERG LAND SURVEYING, INC.
LB4431
675 West Indiantown Road, Suite 200, Jupiter, Florida 33458 TEL. 561-746-8454

TOPOGRAPHIC SURVEY
FPL MANATEE PLANT FOR
DUMPSTER TRANSFER STATION
PREPARED FOR:
CUTCHER & ASSOCIATES, INC.

CAD.	K:\JST\053320\19-086-105\19-086-105.DGN		
REF.			
FLD. K.F.	FB.	PG.	JOB 19-086-105
OFF. R.J.W.	759	43	DATE 10/31/2019
CKD. D.C.L.	SHEET 1	OF 1	DWG. 019-086C

WALKDOWN INFORMATION — AS-BUILT INFORMATION — CHKD. — BY: — DATE:

TECHNICAL ACCEPTANCE — ENGINEERING ORGANIZATION — CHKD. — BY: — DATE:

FULL SCALE

SCALE 3/8"= 1'-0"

SCALE 1/4"= 1'-0"

SITE IMAGE - LIDBERG SITE SURVEY - FPL MANATEE PLANT

N.T.S.

REV No.	ISS.DATE	ISSUED FOR CONSTRUCTION	BY	CH	APR
-	12/18/2019	SUBMITTED FOR REVIEW	KEG	RJC	RJC

REV No.	ISS.DATE	REVISION DESCRIPTION
-	-	-

P.E. SEAL

MANATEE PLANT

FLORIDA POWER & LIGHT

DUMPSTER LOADING AREA

SHEET

SITE IMAGE - LIDBERG SITE SURVEY 10/31/19 - FPL MANATEE PLANT

CUTCHER & ASSOCIATES, INC.
COASTAL ENGINEERS
725 N. HWY A1A STE D101
JUPITER, FL 33477
Ph: (561) 748-6745
Email: depth@gate.net
P.E. No.: 50722 / Auth. Cert. No.: 8641

FILE NUMBER: 2019-581	DRAFTED BY: KEG
DATE: FEBRUARY 20, 2022	DRAWING SIZE: 11" x 17"
REVISION: -	SHEET: 2 OF 15
CADFOLDER / ARCHIVE FILE NAME	

NOTES:
1. ALL CONCRETE SHALL BE Fc' ≥ 5,000 PSI @ 28 DAYS; Wc
2. PROFILE HEIGHT VARIES ALONG APPROACH RAMP
3. FPL/SURVEYOR SHALL SET BOUNDRY STAKES FOR LIMITS OF STRUCTURE

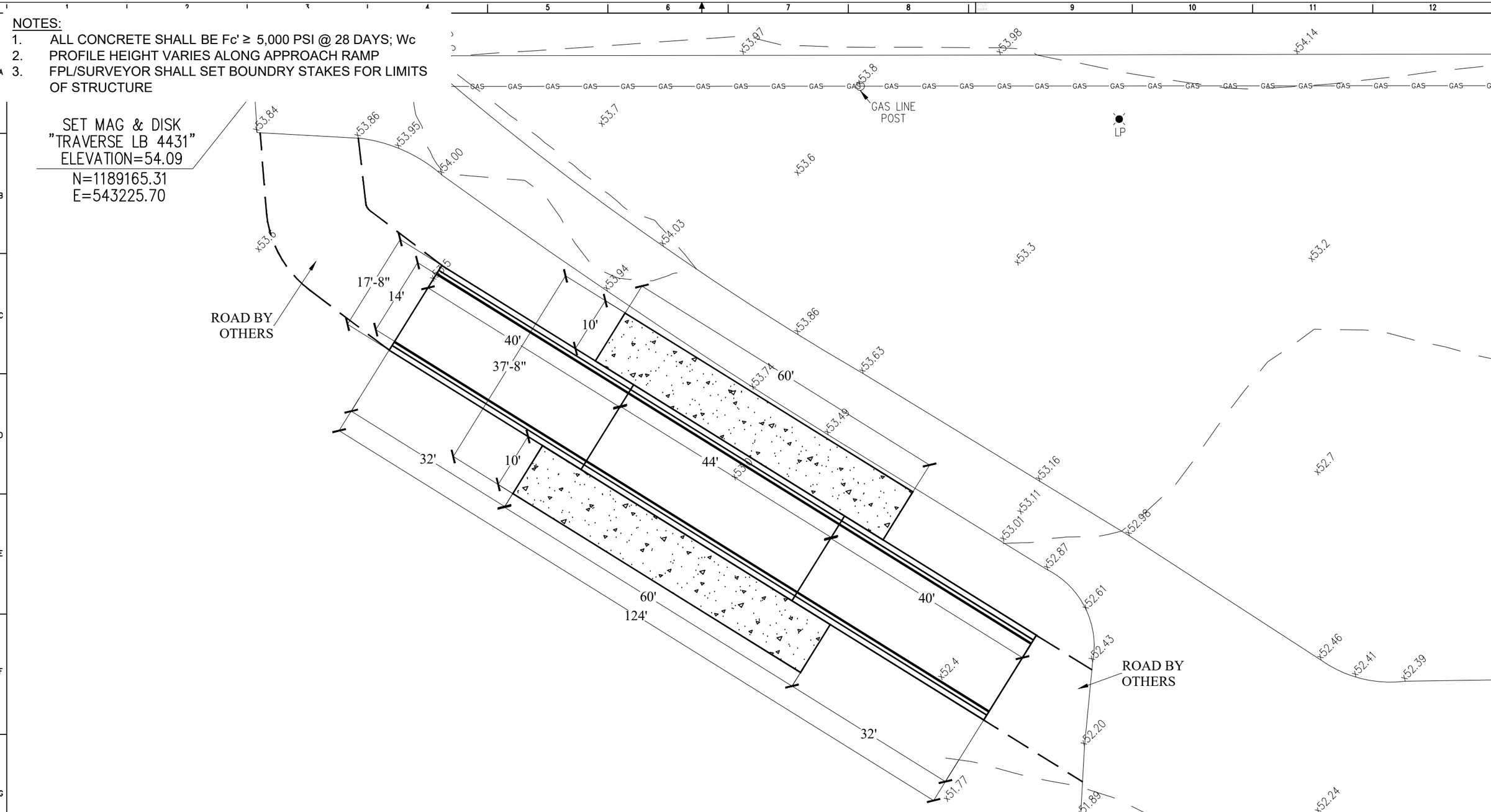

SITE PLAN - PROPOSED DUMPSTER LOADING AREA

1:200

REV No.	ISS.DATE	ISSUED FOR CONSTRUCTION	BY	CH	APR
-	12/18/2019	SUBMITTED FOR REVIEW	KEG	RJC	RJC

REV No.	ISS.DATE	REVISION DESCRIPTION
-	-	-

P.E. SEAL

MANATEE PLANT
FLORIDA POWER & LIGHT
DUMPSTER LOADING AREA

SHEET
SITE PLAN - PROPOSED DUMPSTER LOADING AREA

CUTCHER & ASSOCIATES, INC.
COASTAL ENGINEERS
725 N. HWY A1A STE D101
JUPITER, FL 33477
Ph: (561) 748-6745
Email: depth@gate.net
P.E. No.: 50722 / Auth. Cert. No.: 8641

FILE NUMBER: 2019-581	DRAFTED BY: KEG
DATE FEBRUARY 20, 2022	DRAWING SIZE 11" x 17"
REVISION -	SHEET: 3 OF 15
CADFOLDER / ARCHIVE FILE NAME	

TECHNICAL ACCEPTANCE
ENGINEERING ORGANIZATION
WALKDOWN INFORMATION
AS-BUILT INFORMATION
FULL SCALE
SCALE 3/8"= 1'-0"
SCALE 1/4"= 1'-0"

NOTES:
1. ALL CONCRETE SHALL BE Fc' ≥ 5,000 PSI @ 28 DAYS
2. PROFILE HEIGHT VARIES ALONG APPROACH RAMP

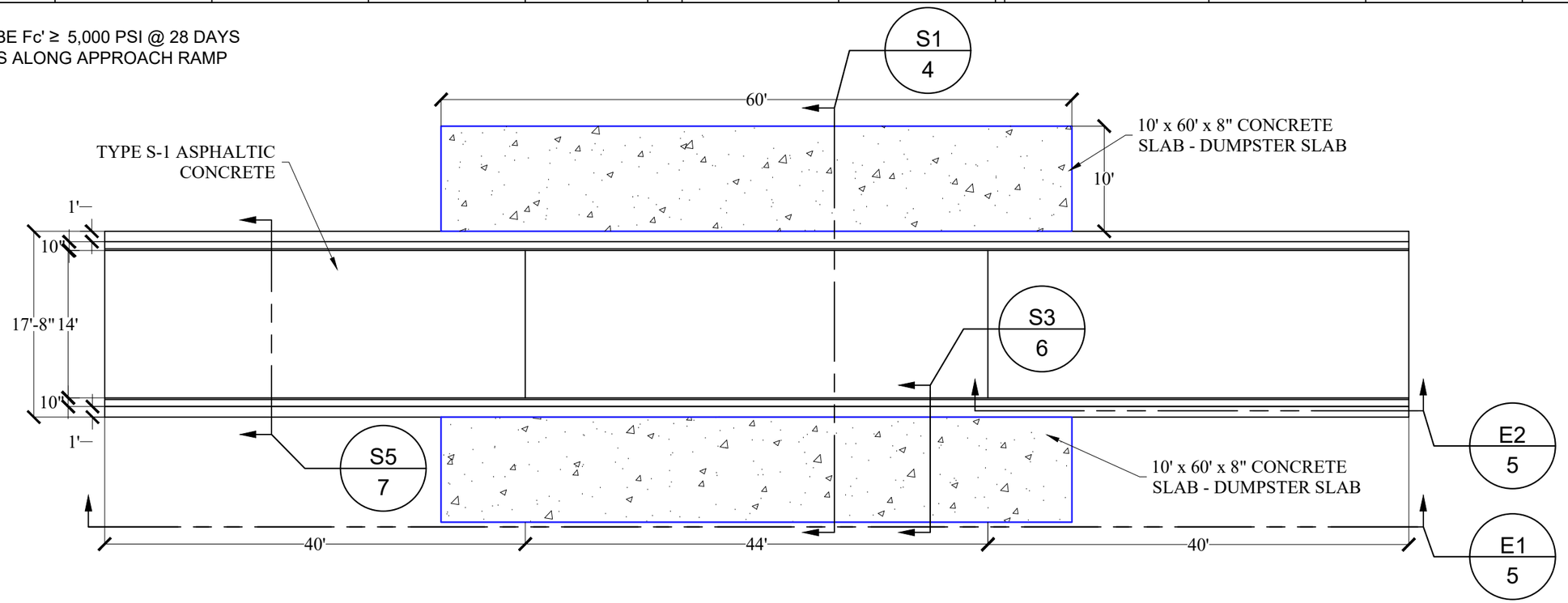

P1 PLAN VIEW - DUMPSTER LOADING AREA

1:140

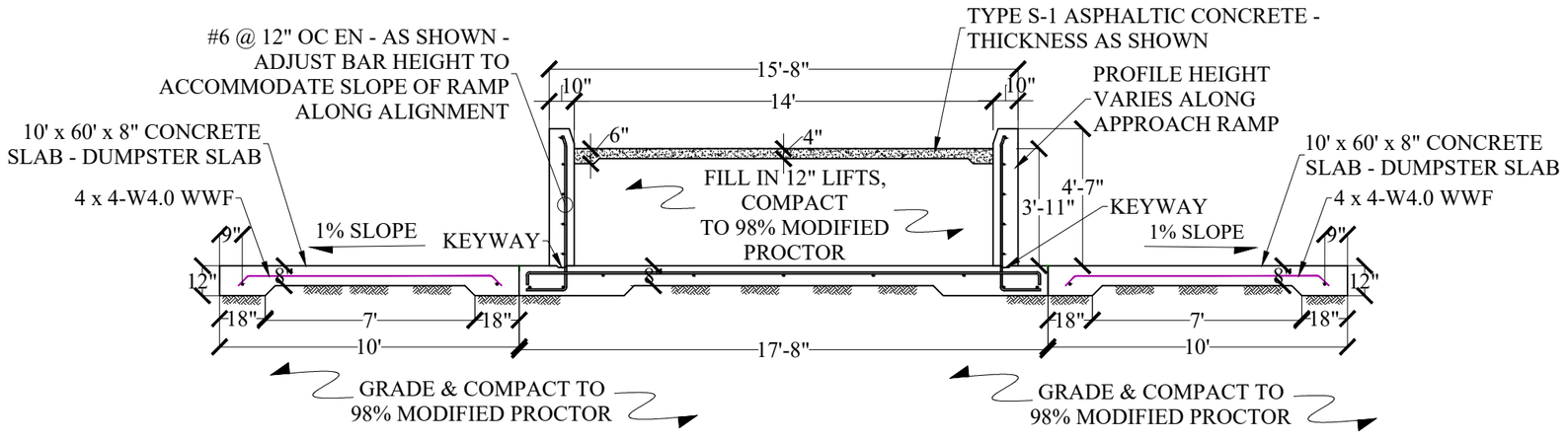

S1 SECTION VIEW - THRU DUMPSTER LOADING AREA

1:60

REV No.	ISS.DATE	ISSUED FOR CONSTRUCTION	BY	CH	APR
-	12/18/2019	SUBMITTED FOR REVIEW	KEG	RJC	RJC

REV No.	ISS.DATE	REVISION DESCRIPTION
-	-	-

P.E. SEAL

MANATEE PLANT
FLORIDA POWER & LIGHT
DUMPSTER LOADING AREA

SHEET
PLAN VIEW & SECTION VIEW - DUMPSTER LOADING AREA

CUTCHER & ASSOCIATES, INC.
COASTAL ENGINEERS
725 N. HWY A1A STE D101
JUPITER, FL 33477
Ph: (561) 748-6745
Email: depth@gate.net
P.E. No.: 50722 / Auth. Cert. No.: 8641

FILE NUMBER: 2019-581	DRAFTED BY: KEG
DATE: FEBRUARY 20, 2022	DRAWING SIZE: 11" x 17"
REVISION: -	SHEET: 4 OF 15
CADFOLDER / ARCHIVE FILE NAME	

TECHNICAL ACCEPTANCE — ENGINEERING ORGANIZATION — ORG / BY / DATE
WALKDOWN INFORMATION — AS-BUILT INFORMATION — ORG / BY / DATE

FULL SCALE
SCALE 3/8"= 1'-0"
SCALE 1/4"= 1'-0"

NOTES:
1. ALL CONCRETE SHALL BE Fc' ≥ 5,000 PSI @ 28 DAYS
2. PROFILE HEIGHT VARIES ALONG APPROACH RAMP

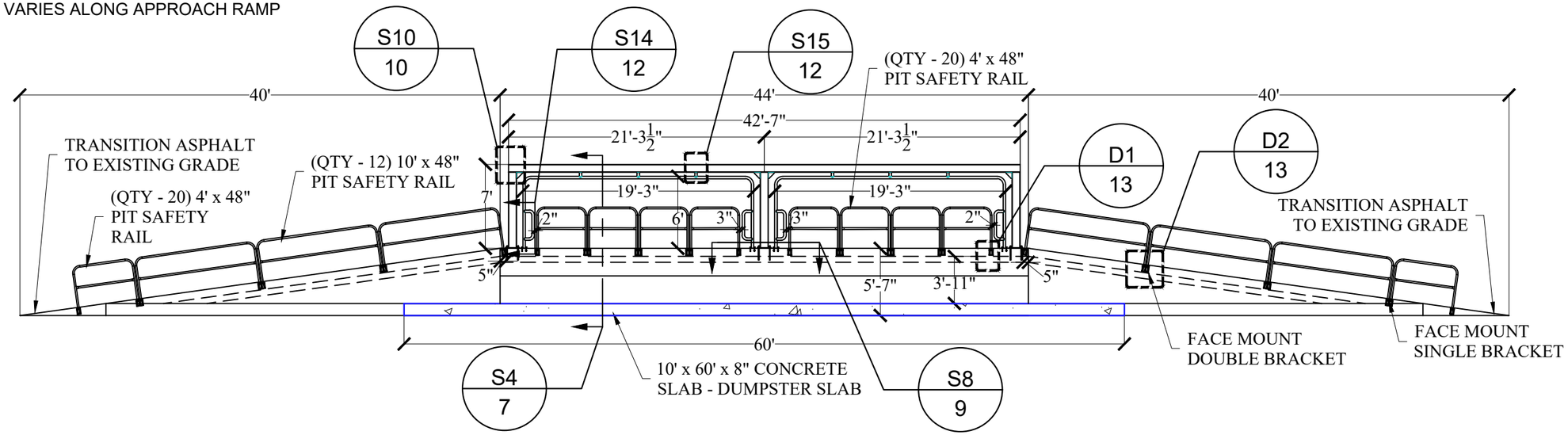

E1 ELEVATION VIEW - DUMPSTER LOADING AREA
1:120

NOTES:
1. ALL CONCRETE SHALL BE Fc' ≥ 5,000 PSI @ 28 DAYS
2. PROFILE HEIGHT VARIES ALONG APPROACH RAMP

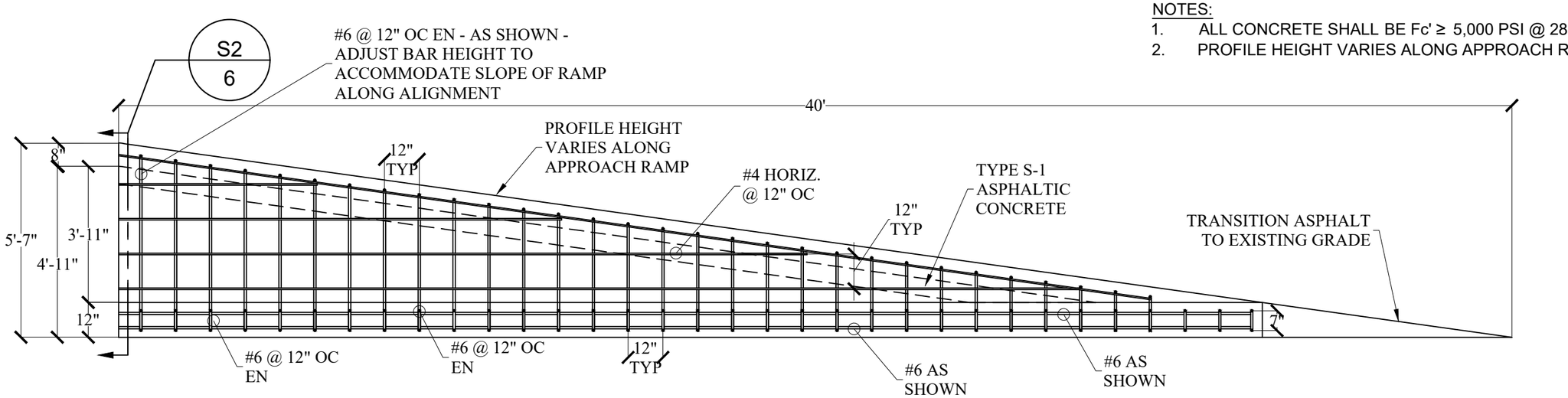

E2 PARTIAL ELEVATION VIEW- RAMP REINFORCEMENT
1:40

REV No.	ISS.DATE	ISSUED FOR CONSTRUCTION	BY	CH	APR
-	12/18/2019	SUBMITTED FOR REVIEW	KEG	RJC	RJC

REV No.	ISS.DATE	REVISION DESCRIPTION
-	-	-

P.E. SEAL

MANATEE PLANT
FLORIDA POWER & LIGHT
DUMPSTER LOADING AREA

SHEET ELEVATION VIEW & PARTIAL ELEVATION VIEW - DUMPSTER LOADING AREA & RAMP REINFORCEMENT

CUTCHER & ASSOCIATES, INC.
COASTAL ENGINEERS
725 N. HWY A1A STE D101
JUPITER, FL 33477
Ph: (561) 748-6745
Email: depth@gate.net
P.E. No.: 50722 / Auth. Cert. No.: 8641

FILE NUMBER:	DRAFTED BY:
2019-581	KEG
DATE	DRAWING SIZE
FEBRUARY 20, 2022	11" x 17"
REVISION	SHEET:
-	5 OF 15

CADFOLDER / ARCHIVE FILE NAME

TECHNICAL ACCEPTANCE
ENGINEERING ORGANIZATION
WALKDOWN INFORMATION
AS-BUILT INFORMATION
FULL SCALE
SCALE 3/8" = 1'-0"
SCALE 1/4" = 1'-0"

NOTES:
1. ALL CONCRETE SHALL BE Fc' ≥ 5,000 PSI @ 28 DAYS
2. PROFILE HEIGHT VARIES ALONG APPROACH RAMP

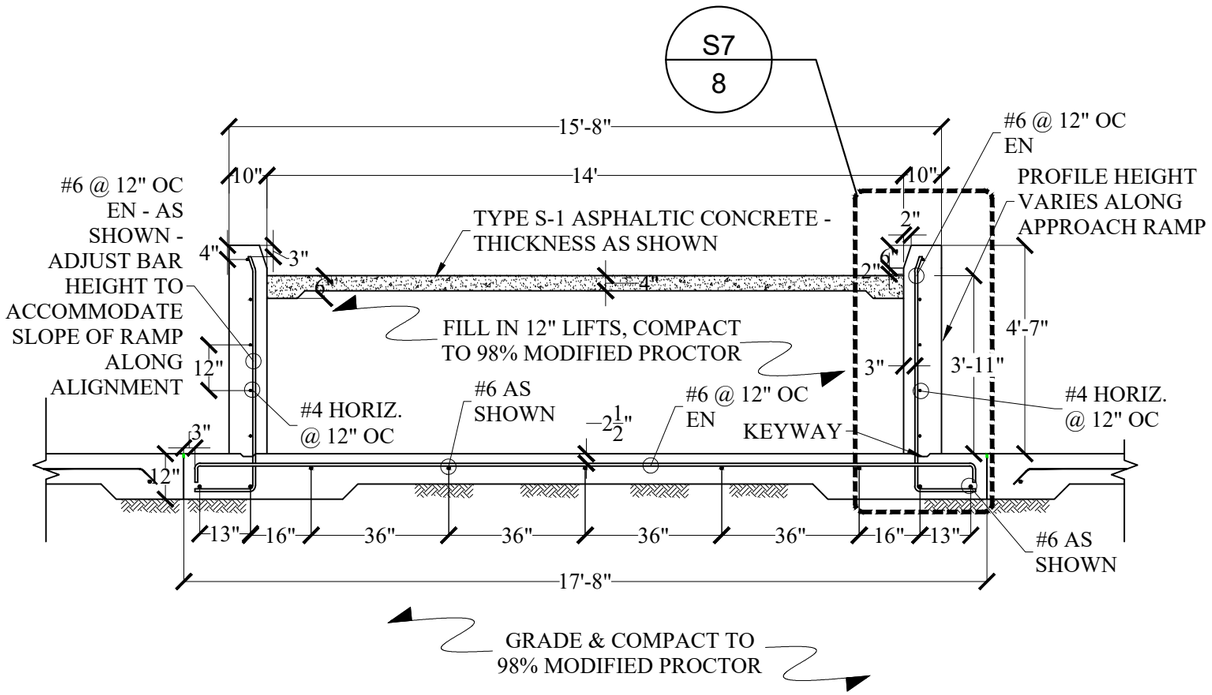

S2 SECTION VIEW - THRU RAMP

1:40

NOTES:
1. ALL CONCRETE SHALL BE Fc' ≥ 5,000 PSI @ 28 DAYS
2. PROFILE HEIGHT VARIES ALONG APPROACH RAMP

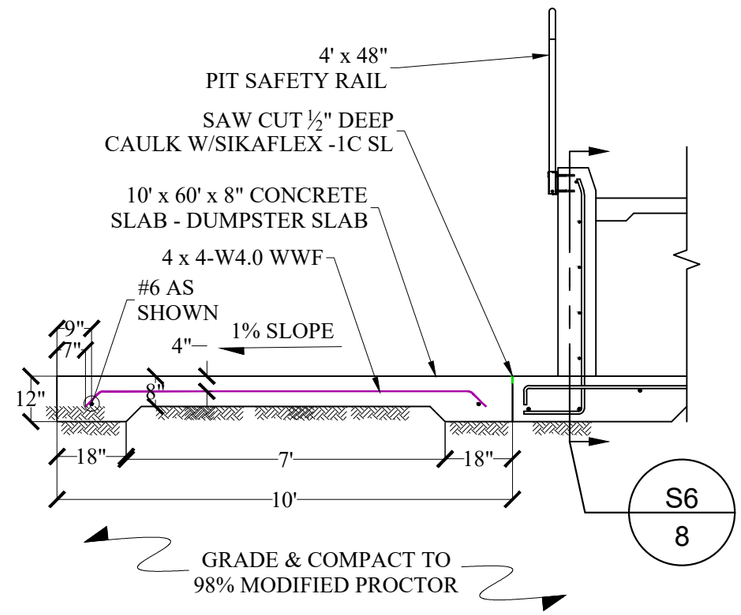

S3 SECTION VIEW - THRU CONCRETE SLAB

1:40

REV No.	ISS.DATE	ISSUED FOR CONSTRUCTION	BY	CH	APR
-	12/18/2019	SUBMITTED FOR REVIEW	KEG	RJC	RJC

REV No.	ISS.DATE	REVISION DESCRIPTION
-	-	-

P.E. SEAL

MANATEE PLANT
FLORIDA POWER & LIGHT
DUMPSTER LOADING AREA

SHEET
SECTION VIEW - THRU RAMP & CONCRETE SLAB

CUTCHER & ASSOCIATES, INC.
COASTAL ENGINEERS
725 N. HWY A1A STE D101
JUPITER, FL 33477
Ph: (561) 748-6745
Email: depth@gate.net
P.E. No.: 50722 / Auth. Cert. No.: 8641

FILE NUMBER: 2019-581	DRAFTED BY: KEG
DATE: FEBRUARY 20, 2022	DRAWING SIZE: 11" x 17"
REVISION: -	SHEET: 6 OF 15
CADFOLDER / ARCHIVE FILE NAME	

TECHNICAL ACCEPTANCE — ENGINEERING ORGANIZATION — ORG. BY: DATE:
WALKDOWN INFORMATION — AS-BUILT INFORMATION — ORG. BY: DATE:

FULL SCALE
SCALE 3/8"= 1'-0"
SCALE 1/4"= 1'-0"

NOTES:
1. ALL CONCRETE SHALL BE Fc' ≥ 5,000 PSI @ 28 DAYS
2. PROFILE HEIGHT VARIES ALONG APPROACH RAMP

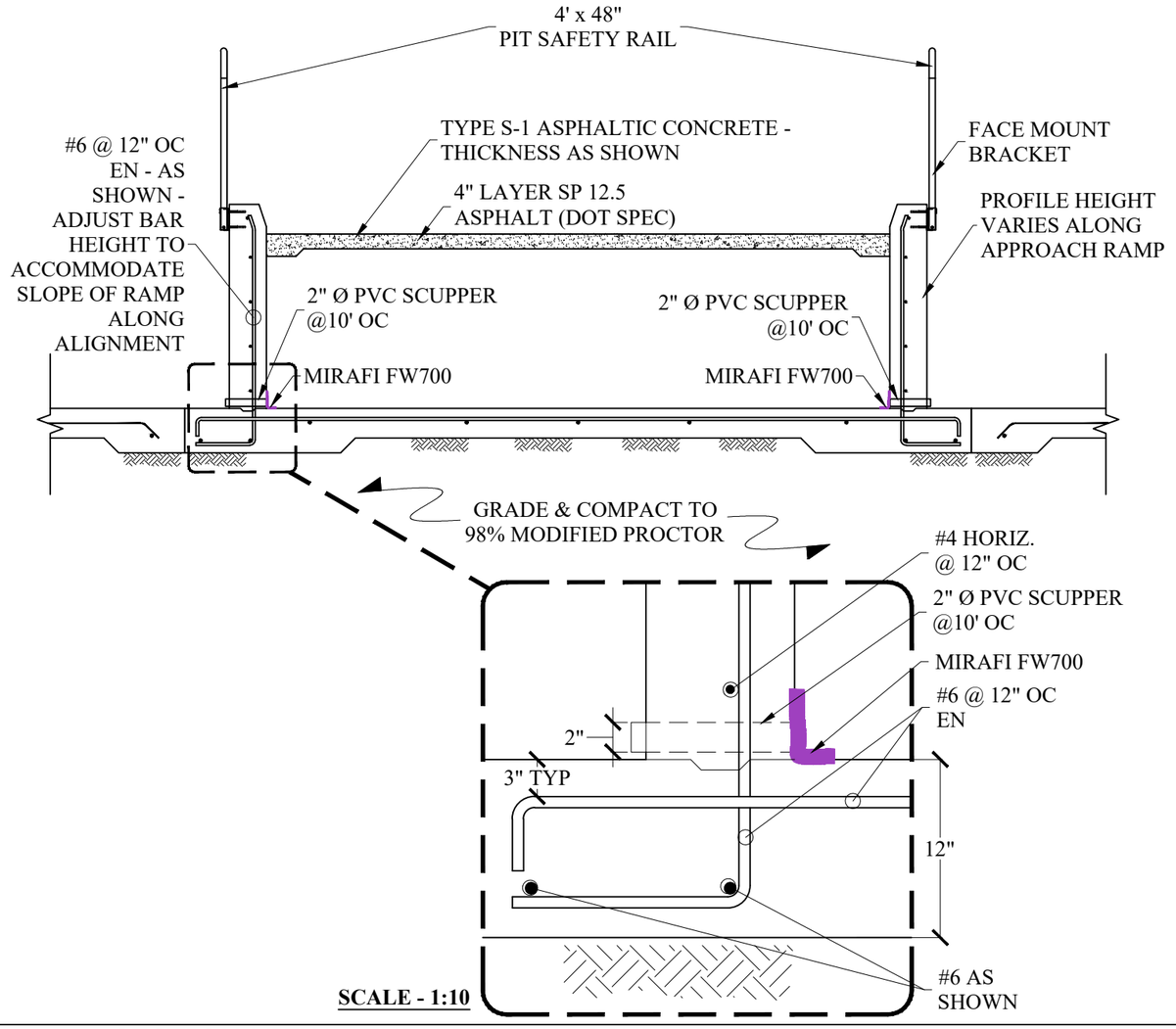

SCALE - 1:10

S4 SECTION VIEW - THRU RAMP W/SCUPPER

1:40

NOTES:
1. ALL CONCRETE SHALL BE Fc' ≥ 5,000 PSI @ 28 DAYS
2. PROFILE HEIGHT VARIES ALONG APPROACH RAMP

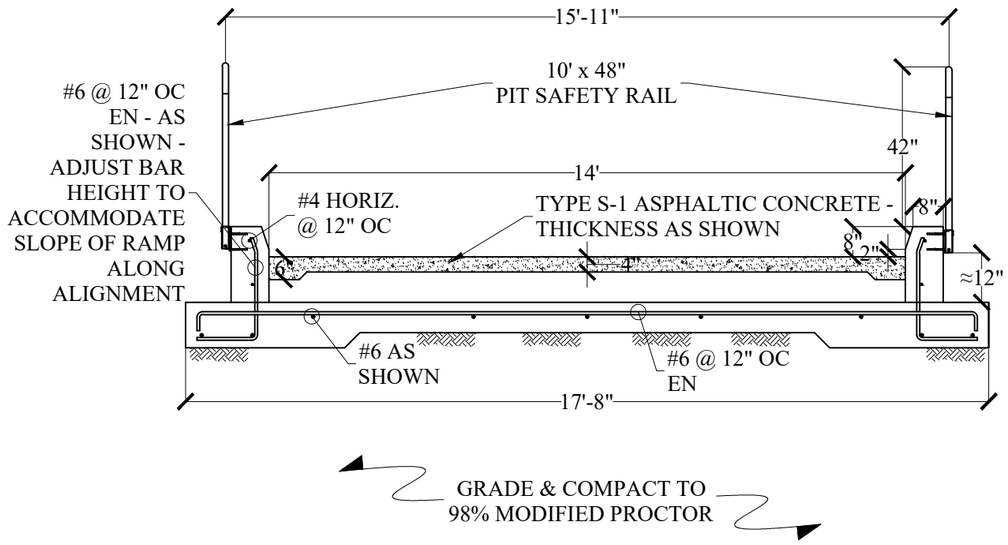

S5 SECTION VIEW - THRU RAMP

1:40

REV No.	ISS.DATE	ISSUED FOR CONSTRUCTION	BY	CH	APR
-	12/18/2019	SUBMITTED FOR REVIEW	KEG	RJC	RJC

REV No.	ISS.DATE	REVISION DESCRIPTION
-	-	-

P.E. SEAL

MANATEE PLANT
FLORIDA POWER & LIGHT
DUMPSTER LOADING AREA

SHEET
SECTION VIEW - THRU RAMP & THRU RAMP W/SCUPPER

CUTCHER & ASSOCIATES, INC.
COASTAL ENGINEERS
725 N. HWY A1A STE D101
JUPITER, FL 33477
Ph: (561) 748-6745
Email: depth@gate.net
P.E. No.: 50722 / Auth. Cert. No.: 8641

FILE NUMBER: 2019-581	DRAFTED BY: KEG
DATE: FEBRUARY 20, 2022	DRAWING SIZE: 11" x 17"
REVISION: -	SHEET: 7 OF 15
CADFOLDER / ARCHIVE FILE NAME	

TECHNICAL ACCEPTANCE — ENGINEERING ORGANIZATION — ORG / BY / DATE

WALKDOWN INFORMATION — AS-BUILT INFORMATION — ORG / BY / DATE

FULL SCALE
SCALE 3/8"= 1'-0"
SCALE 1/4"= 1'-0"

NOTES:

1. ALL CONCRETE SHALL BE Fc' ≥ 5,000 PSI @ 28 DAYS

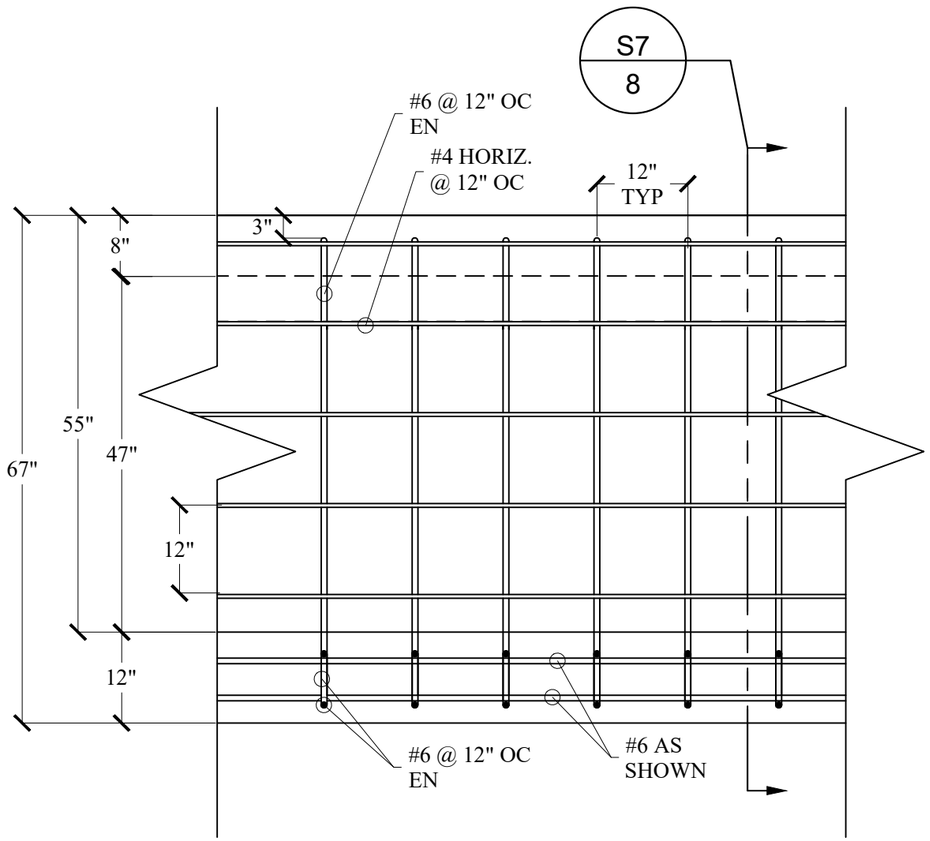

S6 SECTION VIEW - REINFORCEMENT THRU RAMP

1:20

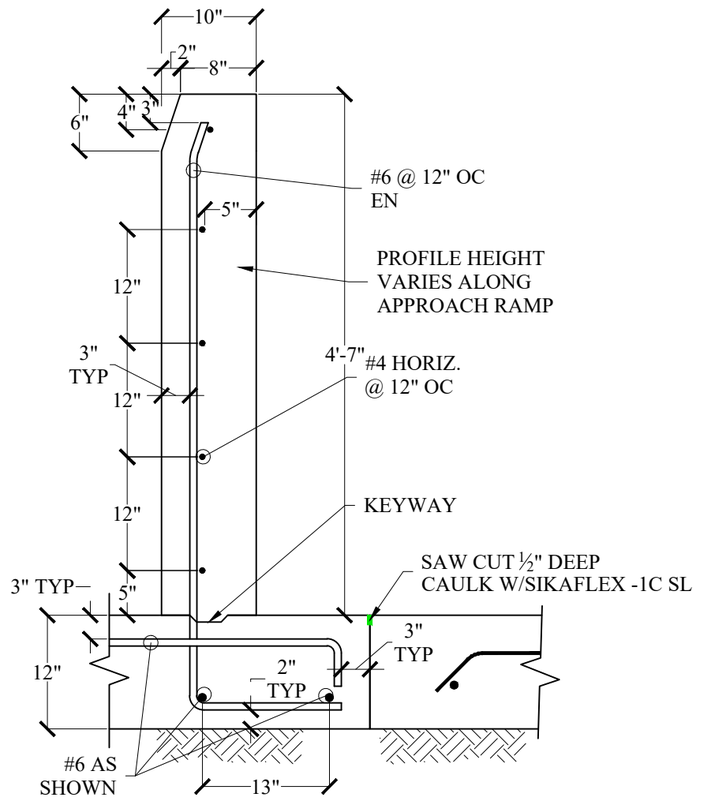

S7 SECTION VIEW - STEEL REINFORCEMENT

1:16

WALKDOWN INFORMATION

AS-BUILT INFORMATION | DRG | BY | DATE

TECHNICAL ACCEPTANCE

ENGINEERING ORGANIZATION | DRG | BY | DATE

FULL SCALE

SCALE 3/8"= 1'-0"

SCALE 1/4"= 1'-0"

REV No.	ISS.DATE	ISSUED FOR CONSTRUCTION	BY	CH	APR
-	12/18/2019	SUBMITTED FOR REVIEW	KEG	RJC	RJC

REV No.	ISS.DATE	REVISION DESCRIPTION
-	-	-

P.E. SEAL

MANATEE PLANT

FLORIDA POWER & LIGHT

DUMPSTER LOADING AREA

SHEET SECTION VIEW - REINFORCEMENT THRU RAMP & SECTION VIEW - STEEL REINFORCEMENT

CUTCHER & ASSOCIATES, INC.
COASTAL ENGINEERS
725 N. HWY A1A STE D101
JUPITER, FL 33477
Ph: (561) 748-6745
Email: depth@gate.net
P.E. No.: 50722 / Auth. Cert. No.: 8641

FILE NUMBER:	DRAFTED BY:
2019-581	KEG
DATE	DRAWING SIZE
FEBRUARY 20, 2022	11" x 17"
REVISION	SHEET:
-	8 OF 15

CADFOLDER / ARCHIVE FILE NAME

NOTES:
1. ALL CONCRETE SHALL BE Fc' ≥ 5,000 PSI @ 28 DAYS

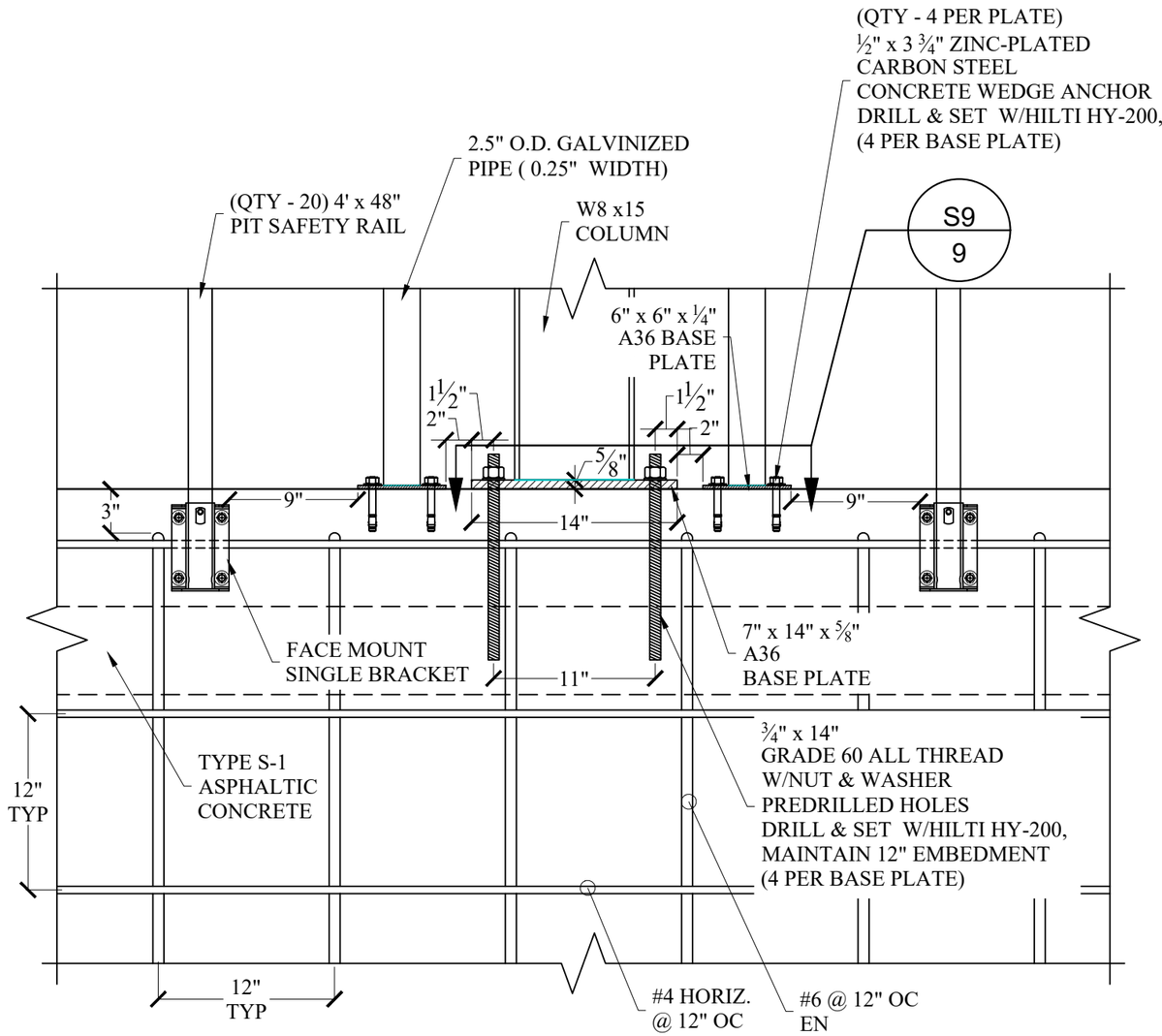

S8 SECTION VIEW - COLUMN, PIPE & SAFETY RAIL ATTACHMENT

1:10

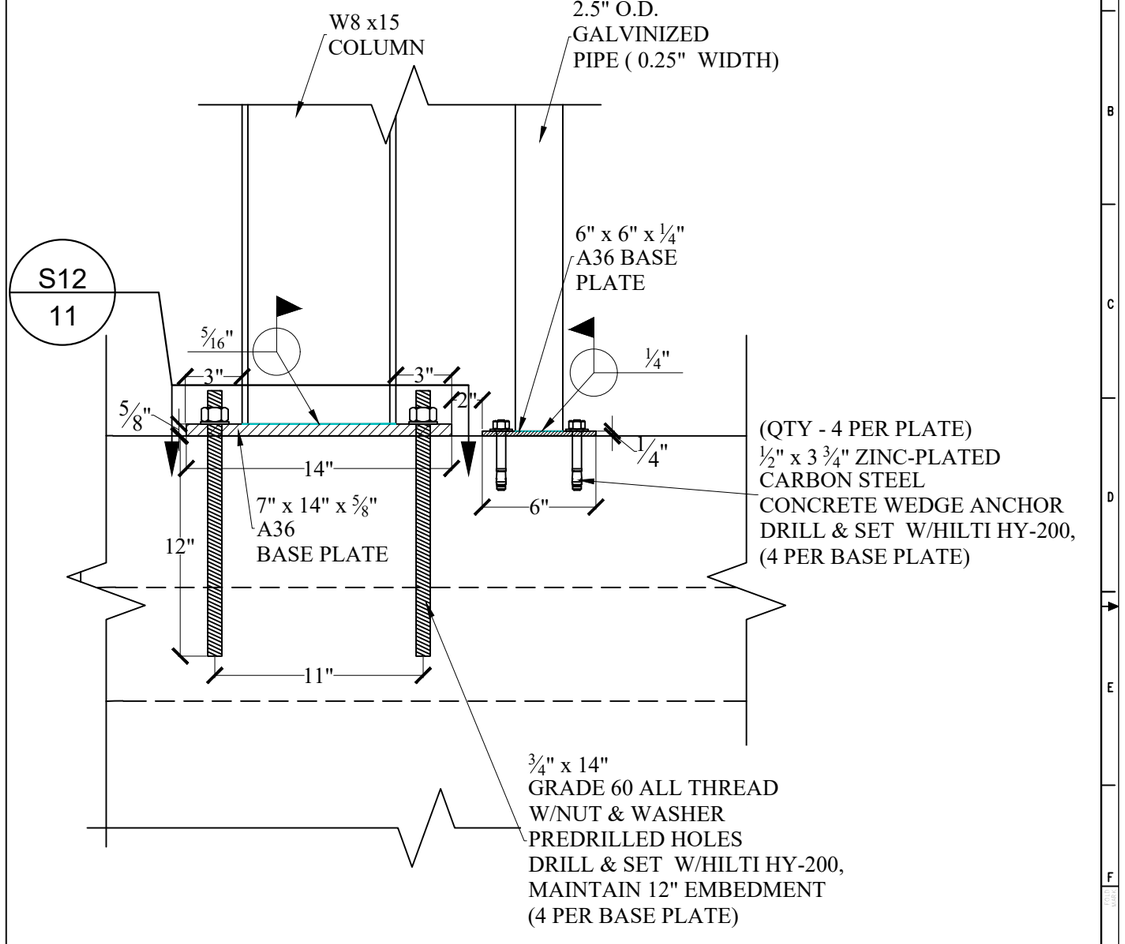

S9 SECTION VIEW - COLUMN & PIPE ATTACHMENT

1:8

REV No.	ISS.DATE	ISSUED FOR CONSTRUCTION	BY	CH	APR
-	12/18/2019	SUBMITTED FOR REVIEW	KEG	RJC	RJC

REV No.	ISS.DATE	REVISION DESCRIPTION
-	-	-

P.E. SEAL

MANATEE PLANT
FLORIDA POWER & LIGHT
DUMPSTER LOADING AREA

SHEET: SECTION VIEW - COLUMN, PIPE & SAFETY RAIL ATTACHMENT & SECTION VIEW - COLUMN & PIPE ATTACHMENT

CUTCHER & ASSOCIATES, INC.
COASTAL ENGINEERS
725 N. HWY A1A STE D101
JUPITER, FL 33477
Ph: (561) 748-6745
Email: depth@gate.net
P.E. No.: 50722 / Auth. Cert. No.: 8641

FILE NUMBER: 2019-581	DRAFTED BY: KEG
DATE: FEBRUARY 20, 2022	DRAWING SIZE: 11" x 17"
REVISION: -	SHEET: 9 OF 15
CADFOLDER / ARCHIVE FILE NAME	

TECHNICAL ACCEPTANCE — ENGINEERING ORGANIZATION — PRO. — BY: — DATE:
WALKDOWN INFORMATION — AS-BUILT INFORMATION — PRO. — BY: — DATE:
FULL SCALE
SCALE 3/8"= 1'-0"
SCALE 1/4"= 1'-0"

NOTES:

1. ALL CONCRETE SHALL BE Fc' ≥ 5,000 PSI @ 28 DAYS

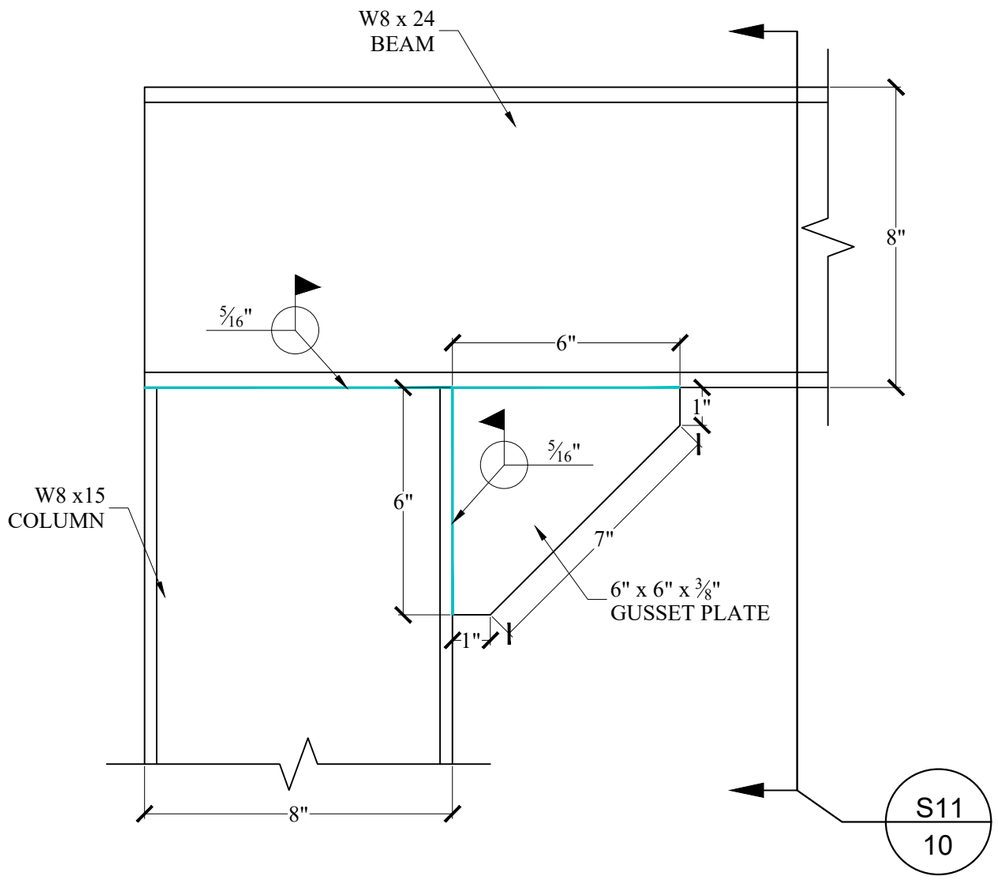

S10 SECTION VIEW - BEAM TO COLUMN ATTACHMENT

1:4

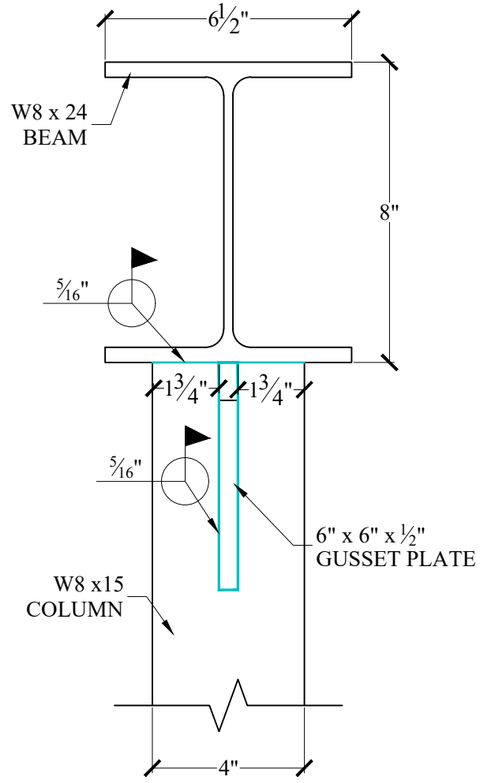

S11 SECTION VIEW - BEAM TO COLUMN W/GUSSET PLATE ATTACHMENT

1:4

REV No.	ISS.DATE	ISSUED FOR CONSTRUCTION	BY	CH	APR
-	12/18/2019	SUBMITTED FOR REVIEW	KEG	RJC	RJC

REV No.	ISS.DATE	REVISION DESCRIPTION
-	-	-

P.E. SEAL

MANATEE PLANT

FLORIDA POWER & LIGHT

DUMPSTER LOADING AREA

SHEET SECTION VIEW - BEAM TO COLUMN ATTACHMENT & SECTION VIEW - BEAM TO COLUMN W/GUSSET PLATE ATTACHMENT

CUTCHER & ASSOCIATES, INC.
COASTAL ENGINEERS
725 N. HWY A1A STE D101
JUPITER, FL 33477
Ph: (561) 748-6745
Email: depth@gate.net
P.E. No.: 50722 / Auth. Cert. No.: 8641

FILE NUMBER: 2019-581	DRAFTED BY: KEG
DATE: FEBRUARY 20, 2022	DRAWING SIZE: 11" x 17"
REVISION: -	SHEET: 10 OF 15
CADFOLDER / ARCHIVE FILE NAME	

TECHNICAL ACCEPTANCE — ENGINEERING ORGANIZATION — PRO — BY — DATE

WALKDOWN INFORMATION — AS-BUILT INFORMATION — PRO — BY — DATE

FULL SCALE

SCALE 3/8" = 1'-0"

SCALE 1/4" = 1'-0"

NOTES:

1. ALL CONCRETE SHALL BE Fc' ≥ 5,000 PSI @ 28 DAYS

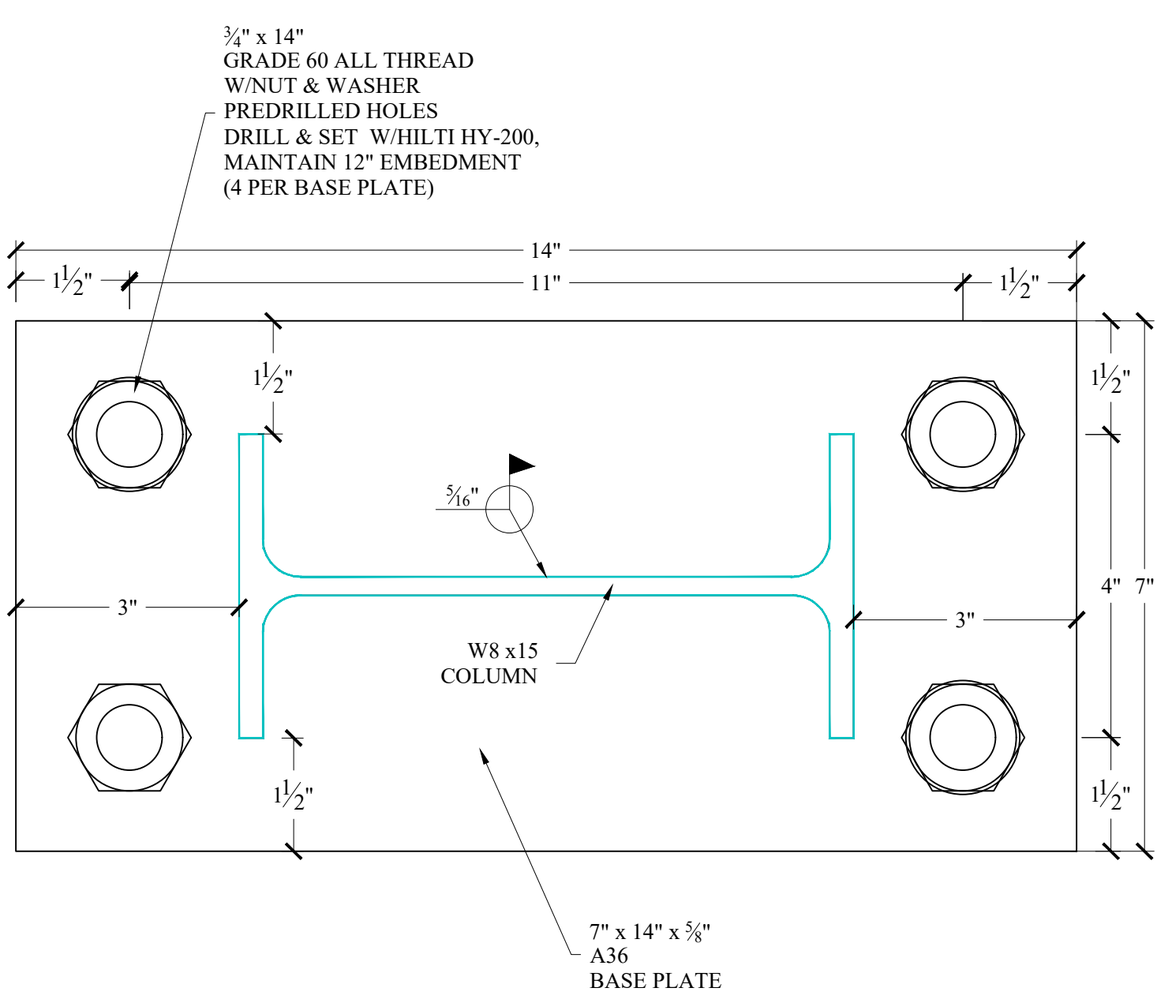

S12 SECTION VIEW - COLUMN TO BASE PLATE ATTACHMENT

1:2

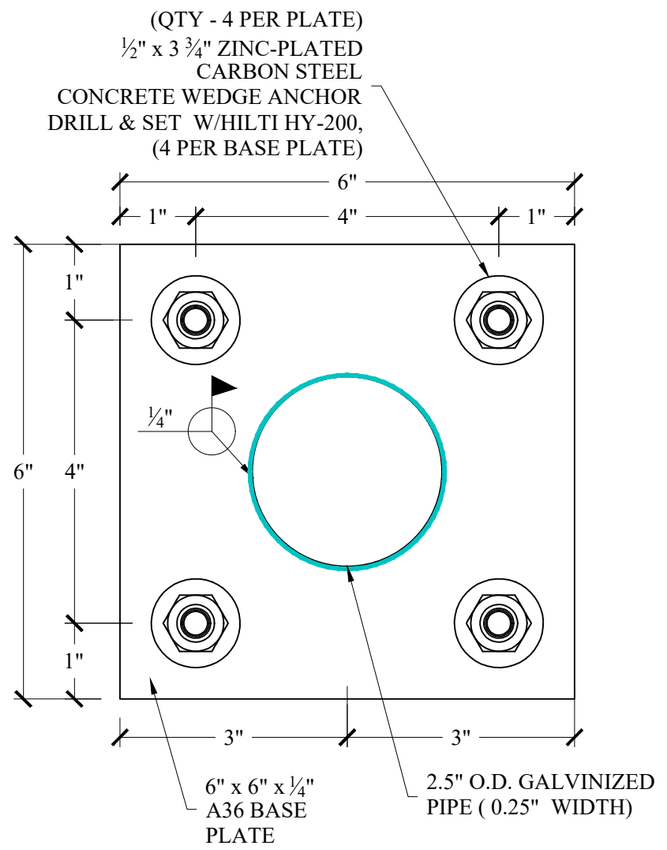

S13 SECTION VIEW - PIPE TO BASE PLATE ATTACHMENT

1:2

REV No.	ISS.DATE	ISSUED FOR CONSTRUCTION	BY	CH	APR
-	12/18/2019	SUBMITTED FOR REVIEW	KEG	RJC	RJC

REV No.	ISS.DATE	REVISION DESCRIPTION	BY	CH	APR
-	-	-	-		

P.E. SEAL

MANATEE PLANT

FLORIDA POWER & LIGHT

DUMPSTER LOADING AREA

SHEET SECTION VIEW - COLUMN TO BASE PLATE ATTACHMENT & SECTION VIEW - PIPE TO BASE PLATE ATTACHMENT

CUTCHER & ASSOCIATES, INC.
COASTAL ENGINEERS
725 N. HWY A1A STE D101
JUPITER, FL 33477
Ph: (561) 748-6745
Email: depth@gate.net
P.E. No.: 50722 / Auth. Cert. No.: 8641

FILE NUMBER: 2019-581	DRAFTED BY: KEG
DATE FEBRUARY 20, 2022	DRAWING SIZE 11" x 17"
REVISION -	SHEET: 11 OF 15
CADFOLDER / ARCHIVE FILE NAME	

TECHNICAL ACCEPTANCE
ENGINEERING ORGANIZATION
WALKDOWN INFORMATION
AS-BUILT INFORMATION
FULL SCALE
SCALE ⅜" = 1'-0"
SCALE ¼" = 1'-0"

NOTES:
1. ALL CONCRETE SHALL BE Fc' ≥ 5,000 PSI @ 28 DAYS

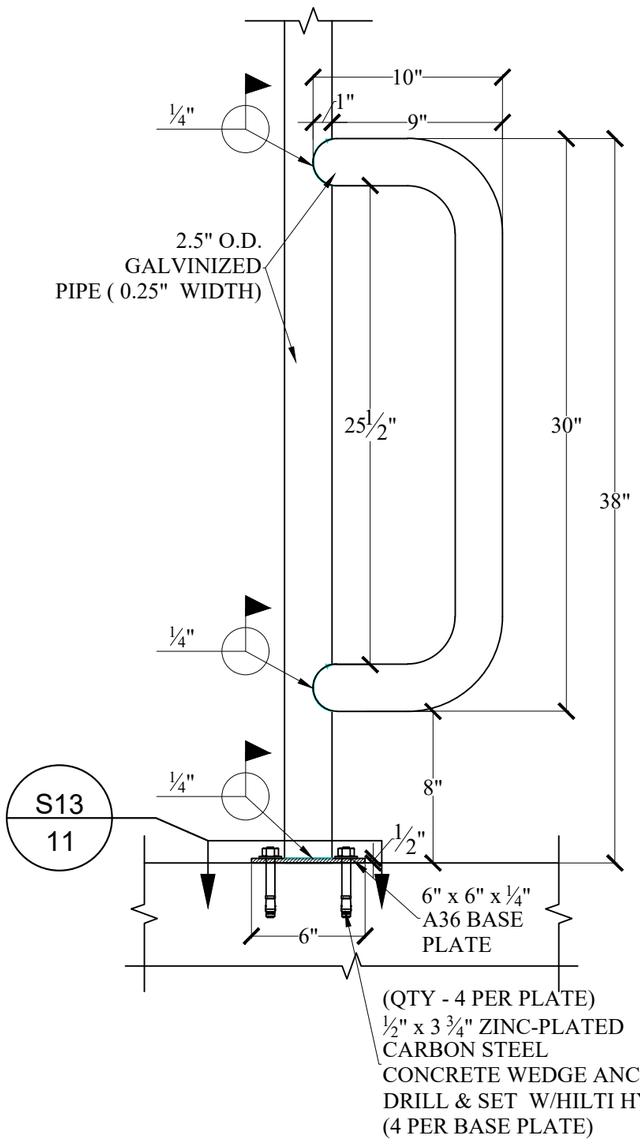

S14 SECTION VIEW - PIPE TO PIPE ATTACHMENT
1:8

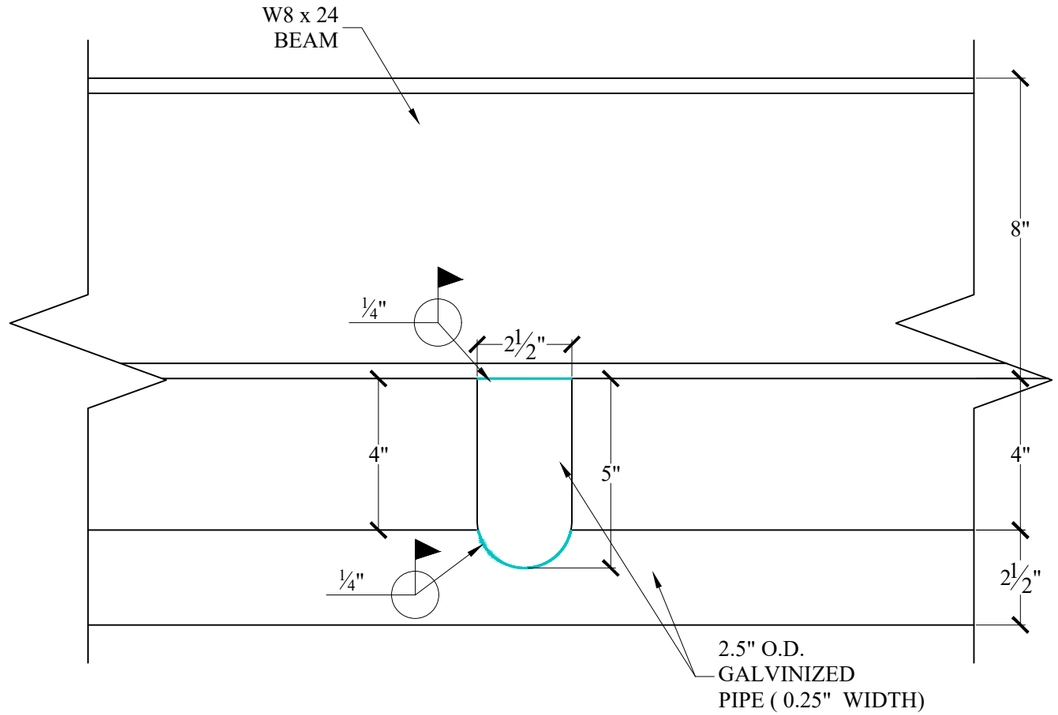

S15 SECTION VIEW - BEAM TO PIPE ATTACHMENT
1:4

REV No.	ISS.DATE	ISSUED FOR CONSTRUCTION	BY	CH	APR
-	12/18/2019	SUBMITTED FOR REVIEW	KEG	RJC	RJC

REV No.	ISS.DATE	REVISION DESCRIPTION
-	-	-

P.E. SEAL

MANATEE PLANT
FLORIDA POWER & LIGHT
DUMPSTER LOADING AREA

SHEET SECTION VIEW - PIPE TO PIPE ATTACHMENT & SECTION VIEW - BEAM TO PIPE ATTACHMENT

CUTCHER & ASSOCIATES, INC.
COASTAL ENGINEERS
725 N. HWY A1A STE D101
JUPITER, FL 33477
Ph: (561) 748-6745
Email: depth@gate.net
P.E. No.: 50722 / Auth. Cert. No.: 8641

FILE NUMBER:	DRAFTED BY:
2019-581	KEG
DATE	DRAWING SIZE
FEBRUARY 20, 2022	11" x 17"
REVISION	SHEET:
-	12 OF 15
CADFOLDER / ARCHIVE FILE NAME	

TECHNICAL ACCEPTANCE — ENGINEERING ORGANIZATION — ORG / BY / DATE
WALKDOWN INFORMATION — AS-BUILT INFORMATION — ORG / BY / DATE

FULL SCALE
SCALE ⅜" = 1'-0"
SCALE ¼" = 1'-0"

NOTES:
1.

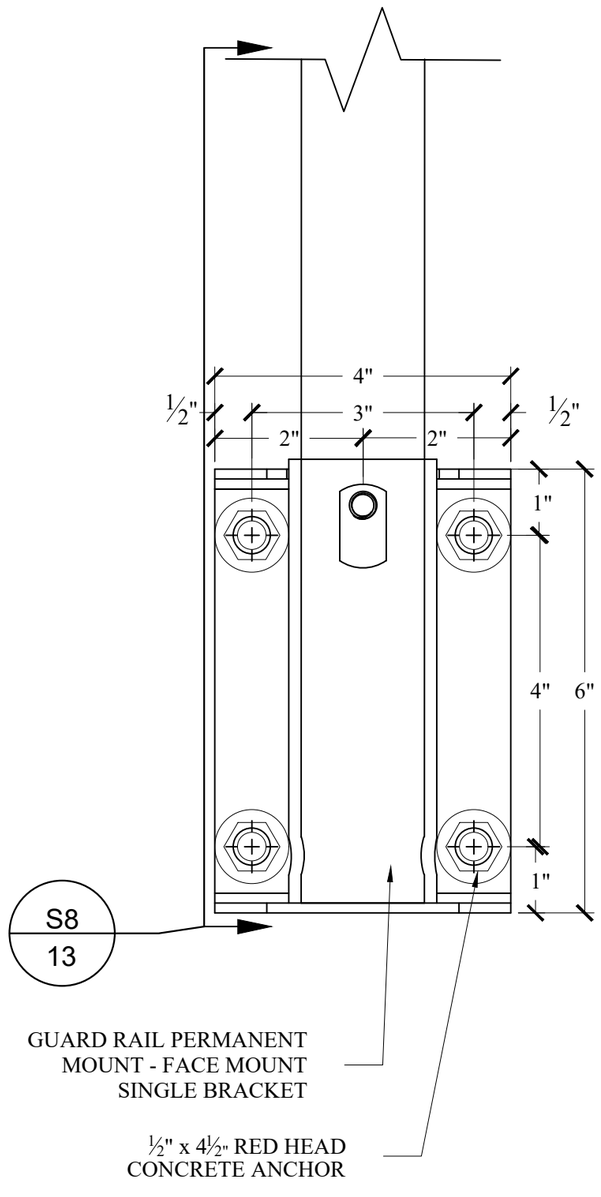

D1 DETAIL VIEW - SINGLE MOUNT BRACKET

1:2

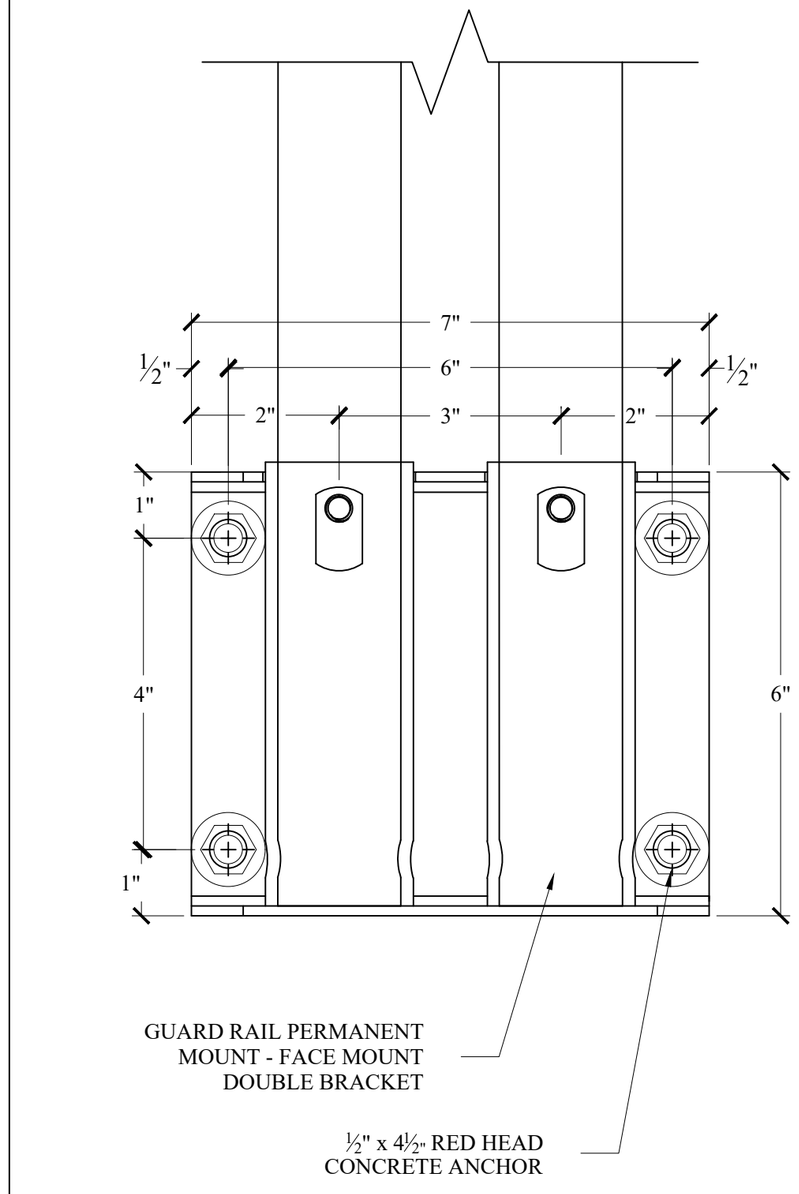

D2 DETAIL VIEW - DOUBLE MOUNT BRACKET

1:2

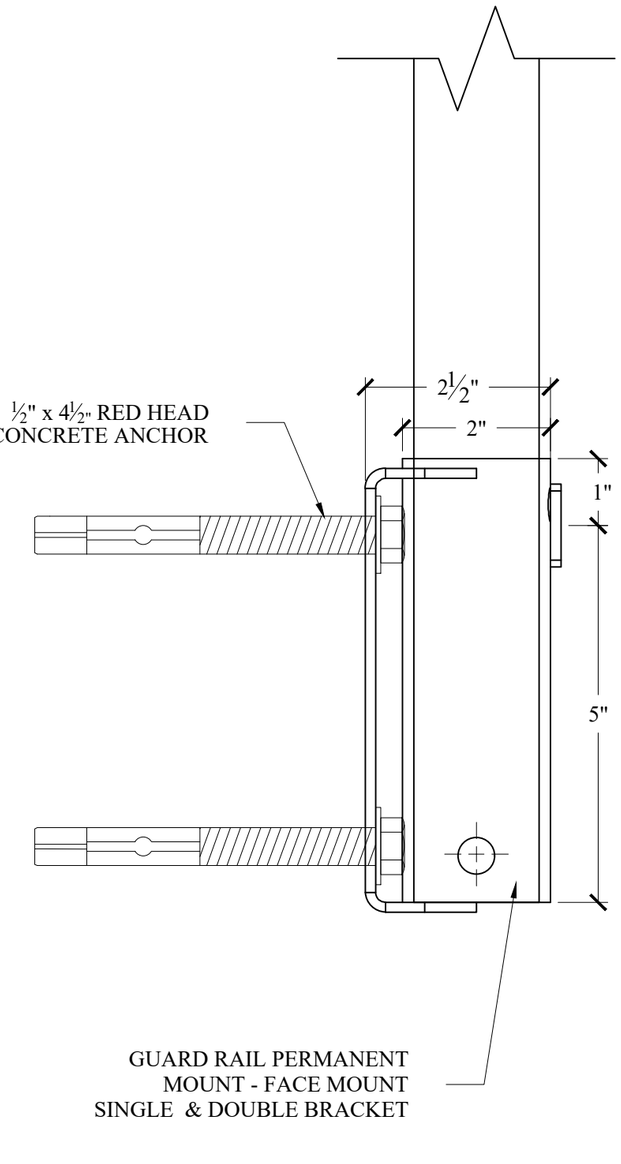

S8 SECTION VIEW - MOUNT BRACKET

1:2

TECHNICAL ACCEPTANCE
ENGINEERING ORGANIZATION — ORG | BY | DATE

WALKDOWN INFORMATION
AS-BUILT INFORMATION — ORG | BY | DATE

FULL SCALE
SCALE 3/8"= 1'-0"
SCALE 1/4"= 1'-0"

REV No.	ISS.DATE	ISSUED FOR CONSTRUCTION	BY	CH	APR
-	12/18/2019	SUBMITTED FOR REVIEW	KEG	RJC	RJC

REV No.	ISS.DATE	REVISION DESCRIPTION
-	-	-

P.E. SEAL

MANATEE PLANT

FLORIDA POWER & LIGHT

DUMPSTER LOADING AREA

SHEET

DEATIL & SECTION VIEW - MOUNT BRACKET

CUTCHER & ASSOCIATES, INC.
COASTAL ENGINEERS
725 N. HWY A1A STE D101
JUPITER, FL 33477
Ph: (561) 748-6745
Email: depth@gate.net
P.E. No.: 50722 / Auth. Cert. No.: 8641

FILE NUMBER: 2019-581	DRAFTED BY: KEG
DATE: FEBRUARY 20, 2022	DRAWING SIZE: 11" x 17"
REVISION: -	SHEET: 13 OF 15
CADFOLDER / ARCHIVE FILE NAME	

TECHNICAL ACCEPTANCE			
ENGINEERING ORGANIZATION	ORG	BY	DATE
WALKDOWN INFORMATION			
AS-BUILT INFORMATION	ORG	BY	DATE

SCALE 3/8" = 1'-0"

SCALE 1/4" = 1'-0"

FULL SCALE

SafetyRailCompany
Fall Protection for Life and Compliance

SAFETY RAIL COMPANY
4244 SHORELINE DRIVE
SPRING PARK, MN 55385
PHONE: (888) 434-2720
www.safetyrailcompany.com

☑ SELECT DESIRED FINISH:

- ☐ POWDER COATED SAFETY YELLOW
- ☐ GALVANIZED
- ☐ GALVANIZED & POWDER COATED SAFETY YELLOW

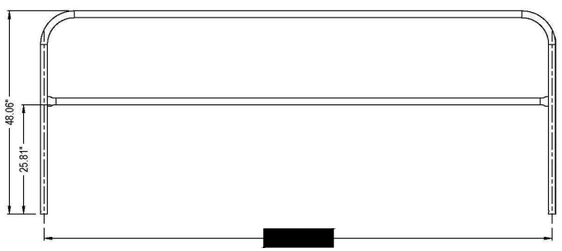

FRONT VIEW

SIDE VIEW

NOTES:
1. INSTALLATION TO BE COMPLETED IN ACCORDANCE WITH MANUFACTURER'S SPECIFICATIONS.
2. DO NOT SCALE DRAWING.
3. THIS DRAWING IS INTENDED FOR USE BY ARCHITECTS, ENGINEERS, CONTRACTORS, CONSULTANTS AND DESIGN PROFESSIONALS FOR PLANNING PURPOSES ONLY. THIS DRAWING MAY NOT BE USED FOR CONSTRUCTION.
4. ALL INFORMATION CONTAINED HEREIN WAS CURRENT AT THE TIME OF DEVELOPMENT BUT MUST BE REVIEWED AND APPROVED BY THE PRODUCT MANUFACTURER TO BE CONSIDERED ACCURATE.
5. CONTRACTOR'S NOTE: FOR PRODUCT AND COMPANY INFORMATION VISIT www.CADdetails.com/info AND ENTER REFERENCE NUMBER 5173-083

GUARD RAIL PERMANENT MOUNT

10' PIT SAFETY RAIL

5173-083 REVISION DATE 01/03/2019

PROTECTED BY COPYRIGHT ©2019 CADDETAILS.COM LTD. CADdetails.com

10' SAFETY RAIL

-

SafetyRailCompany
Fall Protection for Life and Compliance

SAFETY RAIL COMPANY
4244 SHORELINE DRIVE
SPRING PARK, MN 55385
PHONE: (888) 434-2720
www.safetyrailcompany.com

☑ SELECT DESIRED FINISH:

- ☐ POWDER COATED SAFETY YELLOW
- ☐ GALVANIZED
- ☐ GALVANIZED & POWDER COATED SAFETY YELLOW

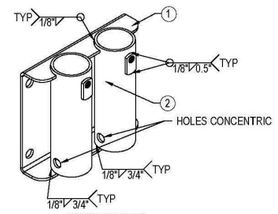

ISOMETRIC VIEW

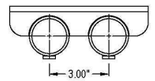

TOP VIEW

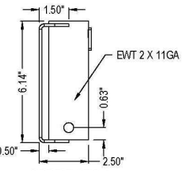

SIDE ELEVATION

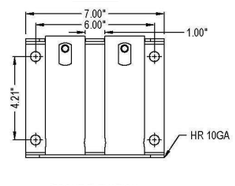

FRONT ELEVATION

LEGEND:
(1) (420043) QTY 1 [FACE MOUNT DOUBLE SHEET]
(2) (420074) QTY 1 [FACE MOUNT TUBE]
(3) (100041) QTY 1 [WELD NUT OFFSET 3/8"-16"]

NOTES:
1. INSTALLATION TO BE COMPLETED IN ACCORDANCE WITH MANUFACTURER'S SPECIFICATIONS.
2. DO NOT SCALE DRAWING.
3. THIS DRAWING IS INTENDED FOR USE BY ARCHITECTS, ENGINEERS, CONTRACTORS, CONSULTANTS AND DESIGN PROFESSIONALS FOR PLANNING PURPOSES ONLY. THIS DRAWING MAY NOT BE USED FOR CONSTRUCTION.
4. ALL INFORMATION CONTAINED HEREIN WAS CURRENT AT THE TIME OF DEVELOPMENT BUT MUST BE REVIEWED AND APPROVED BY THE PRODUCT MANUFACTURER TO BE CONSIDERED ACCURATE.
5. CONTRACTOR'S NOTE: FOR PRODUCT AND COMPANY INFORMATION VISIT www.CADdetails.com/info AND ENTER REFERENCE NUMBER 5173-087

GUARD RAIL PERMANENT MOUNT

FACE MOUNT DOUBLE BRACKET

5173-087 REVISION DATE 08/04/2019

PROTECTED BY COPYRIGHT ©2019 CADDETAILS.COM LTD. CADdetails.com

FACE MOUNT BRACKET

-

RED HEAD
CONCRETE ANCHORING SPECIALISTS

Submittal Information

Trubolt Wedge

SPECIFIED FOR ANCHORAGE INTO CONCRETE

Trubolt Wedge anchors feature a stainless steel expansion clip, threaded stud body, nut and washer. Anchor bodies are made of plated carbon steel, hot-dipped galvanized carbon steel, type 304 stainless steel or type 316 stainless steel as identified in the drawings or other notations.

The exposed end of the anchor is stamped to identify anchor length. Stampings should be preserved during installation for any subsequent embedment verification.

Use carbide tipped hammer drill bits made in accordance with ANSI B212.15-1994 to install anchors.

Anchors are tested to ACI 355.2 and ICC-ES AC193. Anchors are listed by the following agencies as required by the local building code: ICC-ES, UL, FM, City of Los Angeles, California State Fire Marshal and Caltrans.

See pages 42-43 for performance values in accordance to 2006 IBC.

APPROVALS/LISTINGS

Trubolt® Wedge Anchors

ICC Evaluation Service, Inc. # ESR-2251
- – Category 1 performance rating
- – 2006 IBC compliant
- – Meets ACI 318 ductility requirements
- – Tested in accordance with ACI 355.2 and ICC-ES AC193
- – For use in seismic zones A & B
- – 1/4", 3/8" & 1/2" diameter anchors listed in ESR-2251

Underwriters Laboratories
Factory Mutual
City of Los Angeles - #RR2748
California State Fire Marshall
Caltrans
Meets or exceeds U.S. Government G.S.A. Specification A-A-1923A Type 4 (formerlyGSA: FF-S-325 Group II, Type 4, Class 1)

INSTALLATION STEPS

1. Select a carbide drill bit with a diameter equal to the anchor diameter. Drill hole to any depth exceeding the desired embedment. See chart for minimum recommended embedment.
2. Clean hole or continue drilling additional depth to accommodate drill fines.
3. Assemble washer and nut, leaving nut flush with end of anchor to protect threads. Drive anchor through material to be fastened until washer is flush to surface of material.
4. Expand anchor by tightening nut 3-5 turns past the hand tight position, or to the specified torque requirement.

**** ONLY FOR USE IN CONCRETE****

LENGTH INDICATION CODE *

CODE	LENGTH OF ANCHOR		CODE	LENGTH OF ANCHOR	
A	1-1/2 < 2	(38.1 < 50.8)	K	6-1/2 < 7	(165.1 < 177.8)
B	2 < 2-1/2	(50.8 < 63.5)	L	7 < 7-1/2	(177.8 < 190.5)
C	2-1/2 < 3	(63.5 < 76.2)	M	7-1/2 < 8	(190.5 < 203.2)
D	3 < 3-1/2	(76.2 < 88.9)	N	8 < 8-1/2	(203.2 < 215.9)
E	3-1/2 < 4	(88.9 < 101.6)	O	8-1/2 < 9	(215.9 < 228.6)
F	4 < 4-1/2	(101.6 < 114.3)	P	9 < 9-1/2	(228.6 < 241.3)
G	4-1/2 < 5	(114.3 < 127.0)	Q	9-1/2 < 10	(241.3 < 254.0)
H	5 < 5-1/2	(127.0 < 139.7)	R	10 < 11	(254.0 < 279.4)
I	5-1/2 < 6	(139.7 < 152.4)	S	11 < 12	(279.4 < 304.8)
J	6 < 6-1/2	(152.4 < 165.1)	T	12 < 13	(304.8 < 330.2)

*Located on top of anchor for easy inspection.

ITW Red Head
1-800-899-7890

40

02/12
www.itwredhead.com

RED HEAD CONCRETE ANCHOR

-

REV No.	ISS.DATE	ISSUED FOR CONSTRUCTION	BY	CH	APR
-	12/18/2019	SUBMITTED FOR REVIEW	KEG	RJC	RJC

REV No.	ISS.DATE	REVISION DESCRIPTION
-	-	-

P.E. SEAL

MANATEE PLANT
FLORIDA POWER & LIGHT
DUMPSTER LOADING AREA

SHEET

MATERIAL SPECIFICATIONS

CUTCHER & ASSOCIATES, INC.
COASTAL ENGINEERS
725 N. HWY A1A STE D101
JUPITER, FL 33477
Ph: (561) 748-6745
Email: depth@gate.net
P.E. No.: 50722 / Auth. Cert. No.: 8641

FILE NUMBER:	DRAFTED BY:
2019-581	KEG
DATE: FEBRUARY 20, 2022	DRAWING SIZE: 11" x 17"
REVISION: -	SHEET: 14 OF 15
CADFOLDER / ARCHIVE FILE NAME	

BUILDING TRUST

PRODUCT DATA SHEET

Sikaflex®-1c SL

HIGH PERFORMANCE, SELF-LEVELING, 1-PART POLYURETHANE SEALANT

PRODUCT DESCRIPTION

Sikaflex®-1c SL is a single component, self-leveling, premium-grade polyurethane sealant with an accelerated curing capacity. Meets Federal Specification TT-S-00230C, Type I, Class A, Meets ASTM C-920, Type S, Grade P, Class 25, use T, M, A, G, I.

USES

Sikaflex®-1c SL is used to seal horizontal expansion joints in concrete and cementitious slabs such as:

- Sidewalks
- Balconies
- Pavements
- Terraces
- Warehouses
- Factories
- Civil Structures
- Plazas
- Pitch Pans
- Canals and Water Treatment

CHARACTERISTICS / ADVANTAGES

- 1-component, no mixing
- Self-leveling, pourable
- Accelerated curing
- Can be applied to green concrete 24 hours after pour
- Can be applied to damp concrete 1 hour after getting wet
- Extremely elastic
- High durability
- Resists aging, weathering
- Excellent adhesion
- Convenient, easy-to-use packaging
- Jet fuel resistant
- Water Immersion Applications

PRODUCT INFORMATION

Packaging	10.1 fl. oz. moisture-proof composite cartridges, 24/case. 29 oz. moisture-proof composite cartridges,12/case. 5 gallon pails. (filled to 5 gal.) 50 gallon drums.
Color	Limestone
Shelf Life	10.1 oz. & 29 oz. cartridge: 1 year in original unopened packaging. 5 gallon pail & 50 gallon drum: 6 months in original unopened packaging.
Storage Conditions	Store at 40–95 °F (4–35 °C). Condition material to 65–75 °F before using.

Volatile organic compound (VOC) content	40 g/l

TECHNICAL INFORMATION

Shore A Hardness	40 ± 5	(21 days at 73 °F (23 °C) and 50 % R.H.) (ASTM D-2240)
Tensile Strength	150 psi	(21 days at 73 °F (23 °C) and 50 % R.H.) (ASTM D-412)
Tensile Stress at Specified Elongation	110 psi at 100 %	(21 days at 73 °F (23 °C) and 50 % R.H.) (ASTM D-412)
Elongation at Break	320 %	(21 days at 73 °F (23 °C) and 50 % R.H.) (ASTM D-412)
Elastic Recovery	>90 %	

Adhesion in Peel (73 °F (23 °C) and 50 % R.H.) (ASTM C-794)

Substrate	Peel Strength	Adhesion loss
Mortar	> 78 lbs.	0 %
Aluminium	>30 lbs.	0 %
Glass	> 37 lbs.	0 %

Movement Capability	±25 %	(73 °F (23 °C) and 50 % R.H.) (ASTM C-719)
Resistance to Weathering	Excellent	
Service Temperature	-40 °F (-40 °C) to 170 °F (77 °C)	

APPLICATION INFORMATION

Coverage

10.1 oz Cartridge: Yield in Linear feet

Width/Depth	1/4"	3/8"	1/2"
1/4"	24.3		
3/8"	16.2	10.8	
1/2"	12.1	8.1	6.1
3/4"	8.1	5.4	4.0
1"			3.0
1.25"			2.4
1.5"			2.0

29 oz Cartridge: Yield in Linear feet

Width/Depth	1/4"	3/8"	1/2"
1/4"	69.8		
3/8"	46.5	31.0	
1/2"	34.9	23.3	17.4
3/4"	23.3	15.5	11.6
1"			8.7
1.25"			7.0
1.5"			5.8

1 gallon: Yield in Linear feet

Width/Depth	1/4"	3/8"	1/2"
1/4"	307.9		
3/8"	205.3	136.8	
1/2"	153.9	102.6	77.0
3/4"	102.6	68.4	51.3
1"			38.5
1.25"			30.8
1.5"			23.7

Ambient Air Temperature 40–100 °F. Sealant should be installed when joint is at mid-range of its anticipated movement.

BUILDING TRUST

Substrate Temperature 40–100 °F. Sealant should be installed when joint is at mid-range of its anticipated movements.

Curing Rate **Tack-free Time:** 1 to 2 hours
Final Cure: 3 to 5 days

APPLICATION INSTRUCTIONS

SUBSTRATE PREPARATION

Clean all surfaces. Joint walls must be sound, clean,dry, frost-free, and free of oil and grease. Curing compound residues and any other foreign matter must be thoroughly removed. A mechanically roughened surface will also enhance bond. Sikaflex®-1c SL can be applied in green concrete after the concrete has cured for a minimum of 24 hours at 75°F. (23°C). For green concrete applications in control joints the concrete must be cut 8 hours (min.) prior to sealant installation and in expansion joint the forms must be removed 6 hours (min.) prior to sealant installation. For wet concrete applications all excess or standing water must be displaced and concrete must then dry for a minimum of 60 min prior to sealant installation. Install bond breaker tape or backer rod to prevent bond at base of joint.

APPLICATION METHOD / TOOLS

Recommended application temperatures: 40–100 °F. Precconditioning sealant to approximately 70 °F is necessary when working at extremes. For best performance, Sikaflex®-1c SL should be poured into joint when joint slot is at mid-point of its designed expansion and contraction. Pour sealant into joint slot in one direction and allow sealant to flow and level out as necessary. Tool as required, although minimum tooling is necessary. Joint dimension should allow for 1/4 inch minimum and 1/2 inch maximum thickness for sealant. Proper design is 2:1 width to depth ratio. Always use bond breaker tape or closed cell backer rod for support on horizontal joints.
Sikaflex®-1c SL can be applied in green concrete after the concrete has cured for a minimum of 24 hours at 75 °F. Control joints must be cut and open for min of 8 hours prior to application. Expansion joints must have forms removed a minimum of 4 hours prior to application. For damp concrete applications Sikaflex-1c SL can be applied 60 minutes after any and all water has been displaced.

LIMITATIONS

- Allow 1 week cure at standard conditions when using Sikaflex®-1c SL in total water immersion situations.
- When overcoating with water, oil and rubber based paints, compatibility and adhesion testing is essential.
- Rigid paints, coatings, or primers will crack over elastomeric sealant experiencing expansion or contraction.
- Maximum exposure level of chlorine is 5 ppm.
- In joints subject to movement: - maximum depth of sealant must not exceed 1/2 In.; minimum depth is 1/4 In.
- Minimum depth of sealant for horizontal joints subject to traffic is 1/2 in.
- Maximum expansion and contraction should not exceed 25 % of average joint width.
- Do not cure in the presence of curing silicone sealants.
- Avoid contact with alcohol and other solvent cleaners during cure.
- Do not apply when moisture-vapor transmission condition exists from the substrate as this can cause bubbling within the sealant.
- Use opened cartridges the same day.
- The ultimate performance of Sikaflex®-1c SL depends on good joint design and proper application with joint surfaces properly prepared.
- Do not use in contact with bituminous/asphaltic materials.
- In green concrete applications sealing joints in poor or low strength concrete 24 hours after pour may impact ability of sealant to gain proper adhesion.
- In damp concrete applications all standing water and excess water must be eliminated prior to the 60 minute waiting time.

BASIS OF PRODUCT DATA

Results may differ based upon statistical variations depending upon mixing methods and equipment, temperature, application methods, test methods, actual site conditions and curing conditions.

OTHER RESTRICTIONS

See Legal Disclaimer.

ENVIRONMENTAL, HEALTH AND SAFETY

For further information and advice regarding transportation, handling, storage and disposal of chemical products, user should refer to the actual Safety Data Sheets containing physical, environmental, toxicological and other safety related data. User must read the current actual Safety Data Sheets before using any products. In case of an emergency, call CHEMTREC at 1-800-424-9300, International 703-527-3887.

LEGAL DISCLAIMER

- KEEP CONTAINER TIGHTLY CLOSED
- KEEP OUT OF REACH OF CHILDREN
- NOT FOR INTERNAL CONSUMPTION
- FOR INDUSTRIAL USE ONLY
- FOR PROFESSIONAL USE ONLY

BUILDING TRUST

TENCATE
Mirafi®

TENCATE GEOSYNTHETICS
Americas

Mirafi® FW700

EROSION PROTECTION | FILTRATION | SEPARATION

Mirafi® FW700 geotextile is composed of high-tenacity monofilament polypropylene yarns, which are woven into a stable network such that the yarns retain their relative position. Mirafi® FW700 geotextile is inert to biological degradation and resists naturally encountered chemicals, alkalis, and acids.

TenCate Geosynthetics Americas Laboratories are accredited by Geosynthetic Accreditation Institute – Laboratory Accreditation Program (GAI-LAP). NTPEP Listed

Mechanical Properties	Test Method	Unit	Minimum Average Roll Value	
			MD	CD
Grab Tensile Strength	ASTM D4632	lbs (N)	370 (1647)	250 (1113)
Grab Tensile Elongation	ASTM D4632	%	15	15
Trapezoid Tear Strength	ASTM D4533	lbs (N)	100 (445)	60 (267)
CBR Puncture Strength	ASTM D6241	lbs (N)	950 (4228)	
			Minimum Roll Value	
Percent Open Area	COE-02215	%	4	
Permittivity	ASTM D4491	sec^{-1}	0.28	
Flow Rate	ASTM D4491	gal/min/ft² (l/min/m²)	18 (733)	
			Maximum Opening Size	
Apparent Opening Size (AOS)	ASTM D4751	U.S. Sieve (mm)	70 (0.212)	
			Minimum Test Value	
UV Resistance (at 500 hours)	ASTM D4355	% strength retained	90	

Physical Properties	Unit	Roll Size
Roll Dimensions (width x length)	ft (m)	12 x 300 (3.7 x 91)
Roll Area	yd^2 (m^2)	400 (334)

Disclaimer: TenCate assumes no liability for the accuracy or completeness of this information or for the ultimate use by the purchaser. TenCate disclaims any and all express, implied, or statutory standards, warranties or guarantees, including without limitation any implied warranty as to merchantability or fitness for a particular purpose or arising from a course of dealing or usage of trade as to any equipment, materials, or information furnished herewith. This document should not be construed as engineering advice.

Mirafi® is a registered trademark of Nicolon Corporation.

Copyright © 2015 Nicolon Corporation. All Rights Reserved.

365 South Holland Drive
Pendergrass, GA 30567

Tel 706 693 2226
Tel 888 795 0808

Fax 706 693 4400
www.tencate.com

FGS000054
ETQR35

GAI-LAP-25-97

SELECTION CHART

Trubolt Wedge
Carbon Steel w/Zinc Plating

Meets ASTM B633 SC1, Type III specifications for electroplating of 5um = .0002" thickness. This material is well suited for non-corrosive environments.

Typical Applications—Structural Columns, Machinery, Equipment, etc.
Environment—Interior (non-corrosive)
Level of Corrosion—Low

TW-1400 Tie Wire Wedge

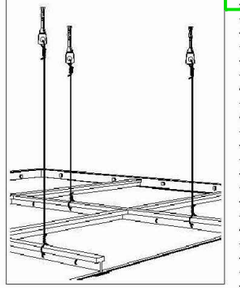

PART NUMBER	THREAD LENGTH in.	THREAD LENGTH (mm)	ANCHOR DIA. & DRILL BIT SIZE (THREADS) PER INCH	OVERALL LENGTH in.	OVERALL LENGTH (mm)	MAX. THICKNESS OF MATERIALS TO BE FASTENED in.	MAX. THICKNESS OF MATERIALS TO BE FASTENED (mm)	QTY/WT PER BOX qty.	QTY/WT PER BOX lbs.	QTY/WT PER MASTER CARTON qty.	QTY/WT PER MASTER CARTON lbs.
WS-1416	3/4	(19.1)		1-3/4	(44.5)	3/8	(9.5)	100	3.1	1000	32
WS-1422	1-1/4	(31.8)	1/4" - 20	2-1/4	(57.2)	7/8	(22.2)	100	3.6	1000	37
WS-1432	2-1/4	(57.2)		3-1/4	(82.6)	1-7/8	(47.6)	100	4.7	800	39
WS-3822	1-1/8	(28.6)		2-1/4	(57.2)	3/8	(9.5)	50	4.1	500	41
WS-3826	1-5/8	(41.3)		2-3/4	(69.9)	7/8	(22.2)	50	4.7	400	39
WS-3838	1-3/4	(44.5)		3	(76.2)	1-1/8	(28.6)	50	5.0	400	41
WS-3836	2-1/2	(63.5)	3/8" - 16	3-3/4	(95.3)	1-7/8	(47.6)	50	5.9	300	36
WS-3850	3-3/4	(95.2)		5	(127.0)	3-1/8	(79.4)	50	7.4	250	38
WS-3870	3-7/8	(98.4)		7	(177.8)	5-1/8	(130.2)	50	10.4	250	53
WS-1226	1-1/4	(31.8)		2-3/4	(69.9)	1/8	(3.2)	25	4.6	200	38
WS-1236	2-1/4	(57.2)		3-3/4	(95.3)	1	(25.4)	25	5.7	150	35
WS-1242	2-3/4	(69.9)		4-1/4	(108.0)	1-1/2	(38.1)	25	6.2	150	38
WS-1244	3	(76.2)	1/2" - 13	4-1/2	(114.3)	1-3/4	(44.5)	25	6.5	150	39
WS-1254	4	(101.6)		5-1/2	(139.7)	2-3/4	(69.9)	25	7.7	150	47
WS-1270	5-1/2	(139.7)		7	(177.8)	4-1/4	(108.0)	25	9.3	150	57
WS-5834	1-3/4	(44.5)		3-1/2	(88.9)	1/8	(3.2)	10	3.6	100	37
WS-5842	2-1/2	(63.5)		4-1/4	(108.0)	7/8	(22.2)	10	4.1	100	42
WS-5850	3-1/4	(82.6)		5	(127.0)	1-5/8	(41.3)	10	4.7	100	48
WS-5860	4-1/4	(107.9)	5/8" - 11	6	(152.4)	2-5/8	(66.7)	10	5.4	50	28
WS-5870	5-1/4	(133.4)		7	(177.8)	3-5/8	(92.1)	10	6.2	30	19
WS-5884	5-3/4	(146.0)		8-1/2	(215.9)	5-1/8	(130.2)	10	8.0	30	25
WS-58100	5-3/4	(146.0)		10	(254.0)	6-5/8	(168.3)	10	9.4	30	29
WS-3442	2-3/8	(60.3)		4-1/4	(108.0)	1/4	(31.8)	10	6.8	60	42
WS-3446	2-7/8	(73.0)		4-3/4	(120.7)	3/4	(19.1)	10	7.4	60	45
WS-3454	3-5/8	(92.1)		5-1/2	(139.7)	1-1/2	(38.1)	10	8.1	50	41
WS-3462	4-3/8	(111.1)	3/4" - 10	6-1/4	(158.8)	2-1/4	(57.2)	10	9.1	30	28
WS-3470	5-1/8	(130.2)		7	(177.8)	3	(76.2)	10	9.7	30	30
WS-3484	5-3/4	(146.0)		8-1/2	(215.9)	4-1/2	(114.3)	10	12.3	30	38
WS-34100	5-3/4	(146.0)		10	(254.0)	6	(152.4)	10	14.0	30	43
WS-34120	1-3/4	(44.5)		12	(304.8)	8	(203.2)	10	16.6	30	51
WS-7860	2-1/2	(63.5)		6	(152.4)	1-3/8	(34.9)	5	6.3	25	32
WS-7880	2-1/2	(63.5)	7/8" - 9	8	(203.2)	3-3/8	(85.7)	5	8.1	15	25
WS-78100	2-1/2	(63.5)		10	(254.0)	5-3/8	(136.5)	5	9.8	15	30
WS-10060	2-1/2	(63.5)		6	(152.4)	1/2	(12.7)	5	8.3	25	43
WS-10090	2-1/2	(63.5)	1" - 8	9	(228.6)	3-1/2	(88.9)	5	11.6	15	36
WS-100120	2-1/2	(63.5)		12	(304.8)	6-1/2	(165.1)	5	15.0	15	46
TIE WIRE											
TW-1400	N/A		1/4"	2-1/8	(54.0)	9/32" hole	(7.1)	100	3.6	1000	36

SELECTION CHART

Trubolt Wedge
Carbon Steel w/ Hot Dipped Galvanizing

Meets ASTM A153 Class specifications for hot-dipped galvanizing > 45um = .002". It is highly recommended for damp, humid environments near coastal regions. Hot dipped galvanized Trubolts have a coating thickness of zinc that is almost 10 times as thick as electroplating. This creates greater corrosion resistance at a minimal cost.

Typical Applications—Railings, Signage, Awnings, etc.
Environment—Rural/ Suburban Exterior environment—essentially unpolluted areas)
Level of Corrosion—Low to Medium

PART NUMBER	THREAD LENGTH in.	THREAD LENGTH (mm)	ANCHOR DIA. & DRILL BIT SIZE (THREADS) PER INCH	OVERALL LENGTH in.	OVERALL LENGTH (mm)	MAX. THICKNESS OF MATERIALS TO BE FASTENED in.	MAX. THICKNESS OF MATERIALS TO BE FASTENED (mm)	QTY/WT PER BOX qty.	QTY/WT PER BOX lbs.	QTY/WT PER MASTER CARTON qty.	QTY/WT PER MASTER CARTON lbs.
WS-12066	1-1/4	(31.8)		2-3/4	(69.9)	1/8	(3.2)	25	4.8	200	39
WS-12426	2-3/4	(69.9)	1/2" - 13	4-1/4	(108.0)	1-1/2	(38.1)	25	6.7	150	41
WS-12546	4	(101.6)		5-1/2	(139.7)	2-3/4	(69.9)	25	8.0	150	49
WS-12706	5-1/2	(139.7)		7	(177.8)	4-1/4	(108.0)	25	9.7	150	59
WS-58346	1-3/4	(44.5)		3-1/2	(88.9)	1/8	(3.2)	10	3.7	100	38
WS-58606	4-1/4	(107.9)	5/8" - 11	6	(152.4)	2-5/8	(66.7)	10	5.6	50	29
WS-34466	2-7/8	(73.0)		4-3/4	(120.7)	3/4	(19.1)	10	7.5	60	46
WS-34546	3-5/8	(92.1)	3/4" - 10	5-1/2	(139.7)	1-1/2	(38.1)	10	8.4	50	42
WS-34846	5-3/4	(146.0)		8-1/2	(215.9)	4-1/2	(114.3)	10	12.5	30	38

RED HEAD

Call our toll free number **800-848-5651** or visit our website for the most current product and technical information at **www.theredhead.com**

SCALE 3/8"= 1'-0"

SCALE 1/4"= 1'-0"

FULL SCALE

WALKDOWN INFORMATION — AS-BUILT INFORMATION — ORG | BY | DATE

TECHNICAL ACCEPTANCE — ENGINEERING ORGANIZATION — ORG | BY | DATE

SIKAFLEX 1c SL

MIRAFI FW700

CONCRETE WEDGE ANCHOR

REV No.	ISS.DATE	ISSUED FOR CONSTRUCTION	BY	CH	APR
-	12/18/2019	SUBMITTED FOR REVIEW	KEG	RJC	RJC

REV No.	ISS.DATE	REVISION DESCRIPTION
-	-	-

P.E. SEAL

MANATEE PLANT

FLORIDA POWER & LIGHT

DUMPSTER LOADING AREA

SHEET

MATERIAL SPECIFICATIONS

CUTCHER & ASSOCIATES, INC.
COASTAL ENGINEERS
725 N. HWY A1A STE D101
JUPITER, FL 33477
Ph: (561) 748-6745
Email: depth@gate.net
P.E. No.: 50722 / Auth. Cert. No.: 8641

FILE NUMBER: 2019-581	DRAFTED BY: KEG
DATE: FEBRUARY 20, 2022	DRAWING SIZE: 11" x 17"
REVISION: -	SHEET: 15 OF 15
CADFOLDER / ARCHIVE FILE NAME	