FPL TURKEY POINT
DRY STORAGE WAREHOUSE
HOMESTEAD, FLORIDA

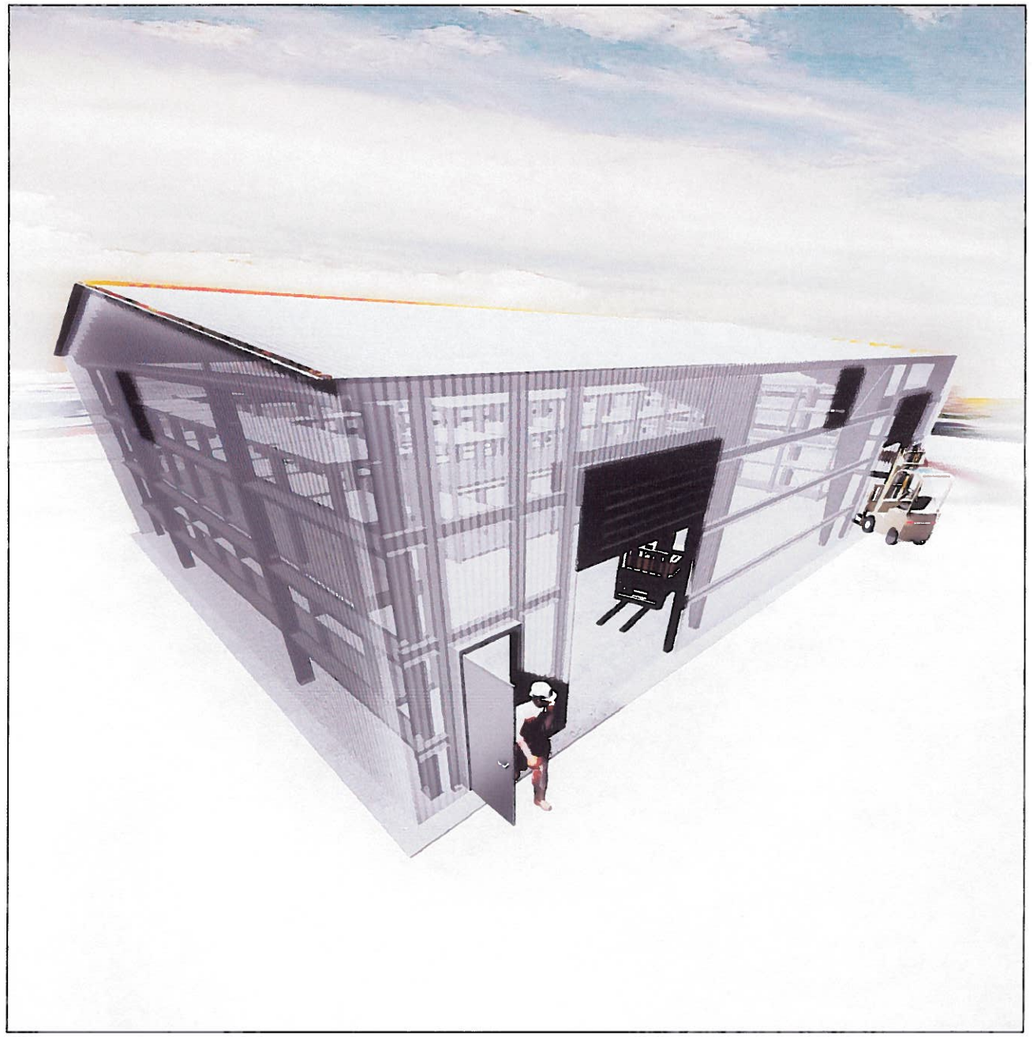

01.30.2014

ARCHITECT OF RECORD

MICHAEL F. HEWES JR
AR 94027

brph

www.brph.com

Copyright © 2012

Architects, Engineers, Constructors
Offices in Melbourne, West Palm Beach, Orlando, Fort Myers, Atlanta, Savannah

Board of Architectural License No. AA C000141
Board of Professional Engineers License No. 1429

These plans are protected by Federal Copyright protection. Unauthorized use may result in an infringement action.

DRAWN BY MFH	APPROVED BY PXR
DESIGNED BY MFH	DATE 11-08-12
CHECKED BY PXR	CAD EDIT

FPL

SYSTEM	DISCIPLINE ARCH	PLANT/UNIT FPL TURKEY POINT
SCALE AS SHOWN	CAD FILE NAME	TITLE DRY STORAGE WAREHOUSE 9700 SW 344 STREET HOMESTEAD, FLORIDA
DRAWING SIZE 30" x 42"	FPL ARCHIVE NAME	
DRAWING NUMBER COVER SHEET		SHEET G-100 REV

REV	DATE	REVISION DESCRIPTION	BY	CH	COR	APP	ORG	REV	DATE	REVISION DESCRIPTION	BY	CH	COR	APP	ORG

FULL SCALE

SCALE 3/8" = 1'-0"

SCALE 1/4" = 1'-0"

GENERAL NOTES

1. DRAWINGS REPRESENT CONDITIONS AS SHOWN BY THE INFORMATION AVAILABLE. THE CONTRACTOR SHALL EXAMINE THE EXISTING CONDITIONS PRIOR TO COMMENCEMENT TO DETERMINE ANY CONCEALED OR UNKNOWN CONDITIONS.

SHEET INDEX

SHEET NUMBER	SHEET TITLE	ORIGINAL DATE	REV NO.	LATEST REV DATE
G-100	COVER SHEET	11-06-12		
G-101	SITE PLAN AND SHEET INDEX	11-06-12		
G-102	LIFE SAFETY PLAN	11-06-12		
C-101	CIVIL SITE PLAN	11-06-12		
A-100	FLOOR PLAN & DETAILS	11-06-12		
A-200	ELEVATIONS	11-06-12		
S-1	FOUNDATION PLAN	01-23-14		
1 THROUGH 28	PRE-ENGINEERED METAL BUILDING DRAWING PACKAGE	11-07-12		
MEP-100	MECHANICAL,ELECTRICAL, PLUMBING PLAN	11-06-12		

AREA MAP

N.T.S.

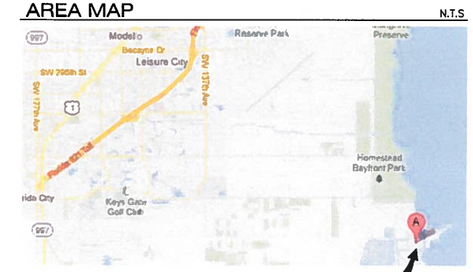

PROJECT LOCATION

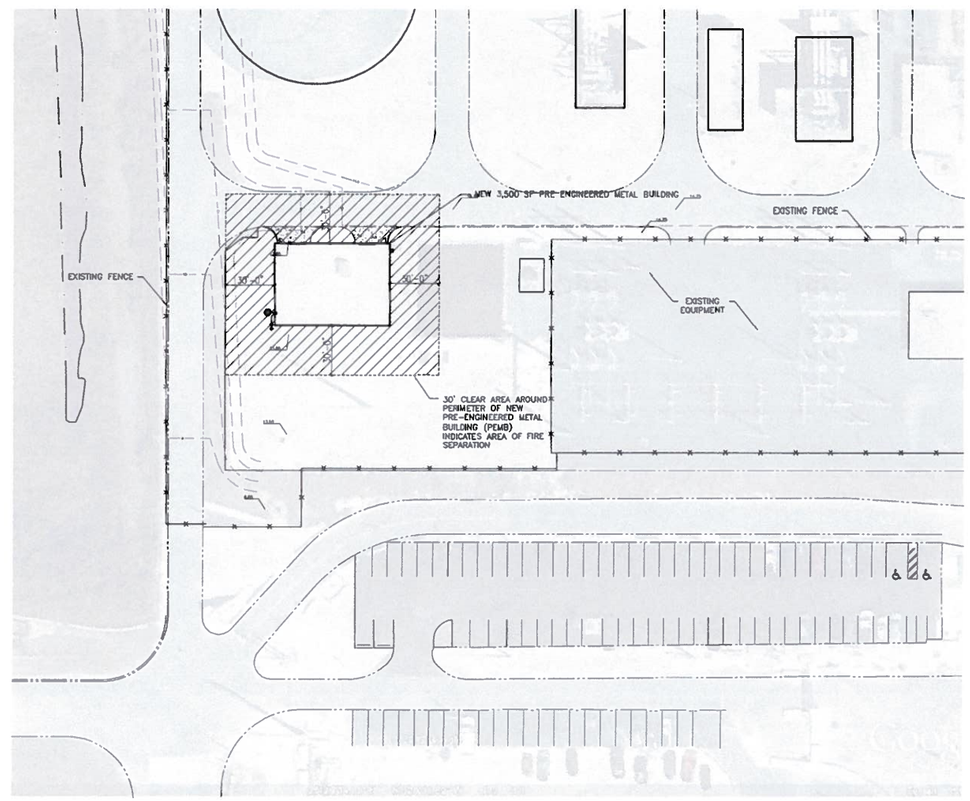

1 SITE PLAN
1/32" = 1'

N

0 16' 32' 64'
SCALE: 1/32" = 1'-0"

01.30.2014

ARCHITECT OF RECORD
MICHAEL F. HEWES JR
AR 94827

brph
www.brph.com
Copyright © 2012
Architects, Engineers, Constructors
Offices in Melbourne, West Palm Beach, Orlando, Fort Myers, Atlanta, Savannah
Board of Architecture License No. AA C000149
Board of Professional Engineers License No. 1479
These plans are protected by Federal Copyright protection. Unauthorized use may result in infringement actions.

DRAWN BY	APPROVED BY
MFH	PXR
DESIGNED BY MFH	DATE 11-06-12
CHECKED BY PXR	CAD CODE

FPL

SYSTEM	DISCIPLINE ARCH	PLANT/UNIT FPL TURKEY POINT
SCALE AS SHOWN	CAD FILE NAME	TITLE DRY STORAGE WAREHOUSE 9700 SW 344 STREET HOMESTEAD, FLORIDA
DRAWING SIZE 30" x 42"	FPL ARCHIVE NAME	
DRAWING NUMBER SITE PLAN AND SHEET INDEX		SHEET G-101 REV

REV	DATE	REVISION DESCRIPTION	BY	CH	COR	APP	ORG	REV	DATE	REVISION DESCRIPTION	BY	CH	COR	APP	ORG

BUILDING CODE/ LIFE SAFETY CODE ANALYSIS

1 GENERAL

REVIEW QUALIFICATION:
This review is based on Code interpretations by the author and includes architectural issues associated with the Building and Life Safety Codes. Note that no confirmation of the information herein has been obtained by the Review Agencies, which, as stated in the Codes, have the authority to direct more stringent requirements.
The Architect of Record reserves the right to implement more stringent requirements.

PROJECT LOCATION/ GOVERNING AGENCY JURISDICTION:
Miami-Dade County, Florida

APPLICABLE CODES:
A. Florida Building Code (FBC), 2010 Edition with Supplements
B. Florida Fire Prevention Code 2010 (FFPC), including NFPA 10, 13 and 101
C. Public Law 101-336: American with Disabilities Act of 1993 (ADA)
D. National Electrical Code (NEC), 2010
E. Florida Building Code- Plumbing, 2010 Edition
F. Federal Emergency Management Agency (FEMA)

PROJECT SUMMARY:
The project consists of a 3,500 square foot dry storage warehouse located within Florida Power and Light's existing facility at Turkey Point. The new construction will be a pre-engineered metal building over a concrete slab on grade.

2 USE AND OCCUPANCY CLASSIFICATION

STORAGE GROUP S - Section 311
311.2 Moderate-hazard Storage, Group S-1
-Capital spare parts will be stored in this facility, therefore this falls under Group S-1

3 GENERAL BUILDING HEIGHT and AREA

STORAGE GROUP S - Moderate-hazard Storage, Group S-1

ALLOWABLE BUILDING HEIGHT and AREA: (FBC Table 503)

Occupancy Classification	Construction Type	Allowable Stories	Allowable Area	Provided Stories	Provided Area
S-1	II-B	2	17,500	1	3,500
Actual area = 3,500 < allowable area of 17,500 therefore Compliant					

4 TYPE of CONSTRUCTION

Type II-B Construction
Unprotected and without sprinkler system

FIRE-RESISTANCE RATING REQUIREMENTS FOR BUILDING ELEMENTS (Hrs):(FBC Table 601)

BUILDING ELEMENT	TYPE IIB (hours)
Primary Structural Frame	0
Bearing walls	
Exterior	0
Interior	0
Nonbearing walls and partitions	
Interior: Exterior	≥30'-0": 0
Floor construction	
Including secondary members	0
Roof construction	
Including secondary members	0

5 FIRE PROTECTION SYSTEMS

903 - Automatic Sprinkler Systems
903.2.9 Group S-1
An automatic sprinkler system is <u>not</u> required for this storage building because it does <u>not</u> have any of the four below listed conditions:
1 - Group S-1 fire area exceeds 12,000 square feet
2 - Group S-1 fire area is located more than three stories above grade plane
3 - Combined area of all fire areas on all floors exceeds 24,000 square feet
4 - The fire area used for the storage of commercial trucks or buses where the fire area exceeds 5,000 square feet

NFPA 101 LIFE SAFETY
42.3.4 DETECTION, ALARM, AND COMMUNICATIONS SYSTEM
42.3.4.1 GENERAL
A fire alarm system shall be required in accordance with section 9.6 for storage occupancies, except as modified by 42.3.4.1, 42.3.4.1.2 and 42.3.4.1.3
42.3.4.1.1 - Not Applicable
42.3.4.1.2 - Storage occupancies with ordinary or high hazard contents not exceeding an aggregate floor area of 100,000 square feet shall not be required to have a fire alarm system.

PROPOSED STORAGE BUILDING IS 3,500 SF; 3,500 SF < 100,000 SF AND SATISFIES THE REQUIREMENTS OF 42.3.4.1.2. THEREFORE A FIRE ALARM SYSTEM IS NOT REQUIRED.

42.3.4.1.3 - Not Applicable

6 MEANS of EGRESS

1004 - Occupant Load
Table 1004.1 Maximum floor area allowances per occupant
Storage = 300 gross per occupant

Exit Capacity: (FBC Table 1005.1 & NFPA Table 7.3.3.1)
0.2 inches per person for clear door opening width, level and ramp travel

TRAVEL DISTANCE TO AN EXIT:
FBC Table 1016.1, S-1 Occupancy, 200' maximum (without sprinkler system). Actual travel distance = 82' < 200' allowed, therefore O.K.

COMMON PATH of TRAVEL:
FBC 1036.4.1: No common path of travel shall exceed 50'.

7 REQUIRED PLUMBING FIXTURES

PLUMBING CALCULATIONS: (FBC-Plumbing Table 403.1)

Occupancy	WATER CLOSETS 1 Per 100	LAVATORIES 1 Per 100	DF (1:1000)	SERVICE SINK
S-1 (12 occupants)	1	1	1	1
TOTAL REQUIRED	1	1	1	1
TOTAL PROVIDED	1	1	1	1

LEGEND

FE — FIRE EXTINGUISHER
EMERGENCY EXIT SIGN
EMERGENCY LIGHT
3500 — ROOM AREA (SQUARE FEET)
300 — OCCUPANT LOAD FACTOR
12 — OCCUPANT LOAD - (PERSONS)
8 — OCCUPANT LOAD - PERSONS
39" — REQUIRED EGRESS WIDTH
32" — PROVIDED EGRESS WIDTH

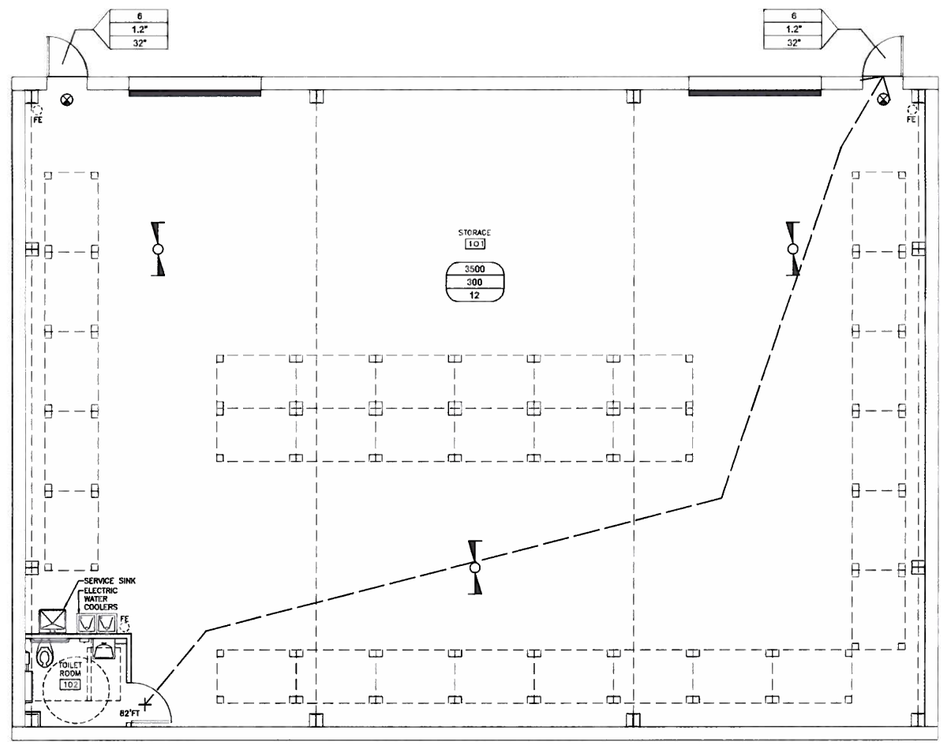

1 LIFE SAFETY PLAN
1/4"=1'-0"

SCALE: 1/4" = 1'-0"

01.30.2014

ARCHITECT OF RECORD
MICHAEL F. HEWES JR.
AR 94827

brph
www.brph.com
Copyright © 2012
Architects, Engineers, Constructors
Offices in Melbourne, West Palm Beach, Orlando, Fort Myers, Atlanta, Savannah
Board of Architecture License No. AA C000149
Board of Professional Engineers License No. 1429
These plans are protected by Federal Copyright protection. Unauthorized use may result in an infringement action.

DRAWN BY	MFH
APPROVED BY	PXR
DESIGNED BY	MFH
DATE	11-06-12
CHECKED BY	PXR
CAD CODE	

FPL

SYSTEM	DISCIPLINE: ARCH	PLANT/UNIT: FPL TURKEY POINT
SCALE: AS SHOWN	CAD FILE NAME	TITLE: DRY STORAGE WAREHOUSE 9700 SW 344 STREET HOMESTEAD, FLORIDA
DRAWING SIZE: 30" x 42"	FPL ARCHIVE NAME	
DRAWING NUMBER: LIFE SAFETY PLAN		SHEET: G-102 REV

REV	DATE	REVISION DESCRIPTION	BY	CH	COR	APP	ORG	REV	DATE	REVISION DESCRIPTION	BY	CH	COR	APP	ORG

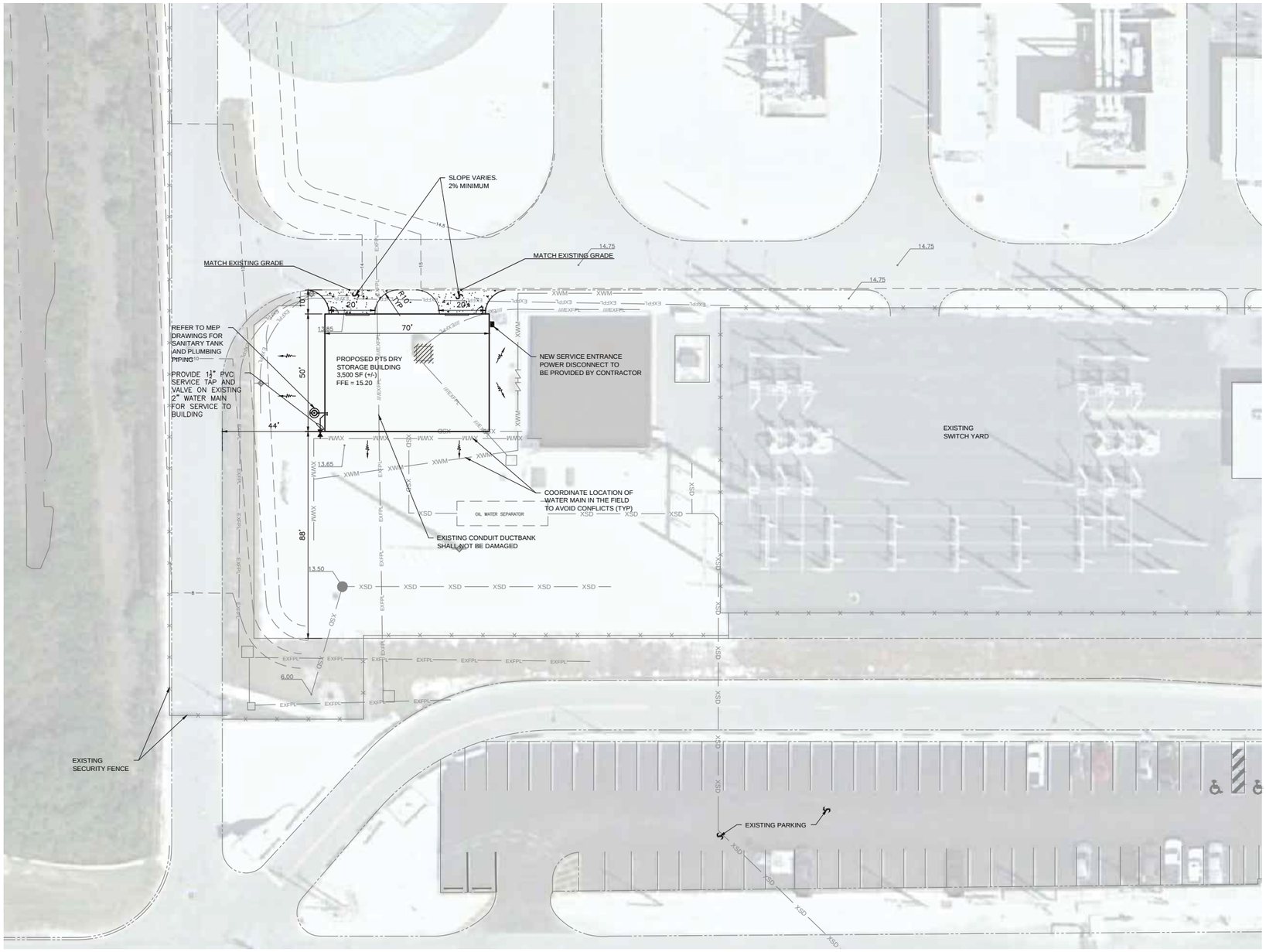

CIVIL SITE PLAN

1" = 20'

0 10' 20' 40' 60'

SCALE: 1" = 20'

LEGEND:

- PROVIDE NEW ASPHALT PAVEMENT. PAVEMENT STRUCTURE SHALL BE 2" SP 12.5, 8" LIMEROCK BASE COURSE COMPACTED TO 98% MODIFIED PROCTOR, ASTM 1557, AND 12" COMPACTED SUBGRADE 98% MODIFIED PROCTOR ASTM 1557
- TO BE DECOMMISSIONED AND/OR RELOCATED BY FPL
- EXISTING LIGHT POLE
- EXFPL — EXISTING FPL LINE
- ////EXFPL — EXISTING UNDERGROUND POWER LINES TO BE DECOMMISSIONED AND/OR RELOCATED BY CONTRACTOR
- XSD — EXISTING STORM LINE
- XWM — EXISTING 2" PVC WATER LINE
- EXISTING DOUBLE CHECK DETECTOR
- EXISTING CATCH BASIN

EROSION AND SEDIMENT CONTROL REQUIREMENTS

1. THE CONTRACTOR SHALL MAKE EVERY EFFORT DURING CONSTRUCTION TO CONTROL WIND AND WATER EROSION OF THE SOIL ON SITE.
2. SHOULD THE SITE BECOME EXCESSIVELY DRY, AND WIND AND SOIL EROSION BECOMES PREVALENT AND A NUISANCE TO THE COMMUNITY, THE CONTRACTOR SHALL WATER AND/OR SEED AND MULCH THE AREA, AND/OR PROVIDE FENCING AS NECESSARY AT NO ADDITIONAL COST TO OWNER.

GENERAL NOTES

1. CONTRACTOR SHALL FIELD VERIFY ELEVATIONS OF ALL EXISTING STRUCTURES PROTRUDING IN THE ASPHALT OR CURRENTLY UNDER THE ASPHALT INCLUDING, BUT NOT LIMITED TO CATCH BASINS, MANHOLES, UTILITY COVERS, RIMS AND CLEAN-OUTS, INCLUDING LOCATIONS, ELEVATIONS AND CONFLICTS AND INFORM ENGINEER PRIOR TO CONSTRUCTION OF ANY DISCREPANCIES. CONTRACTOR SHALL ACCOMMODATE FOR FIELD ADJUSTMENTS IN DEPTH, DISTANCE AND LOCATION OF SAID STRUCTURES.
2. CONTRACTOR SHALL REPAIR AND/OR REPLACE ITEMS DAMAGED DURING CONSTRUCTION AS REQUIRED.
3. ALL CATCH BASINS WITHIN LIMITS OF CONSTRUCTION SHALL HAVE FILTER FABRIC PRIOR TO AND DURING CONSTRUCTION ACTIVITIES.
4. ADJUST STRUCTURE RIMS AS REQUIRED TO MATCH FINISHED ASPHALT OR CONCRETE, AND FINISHED GRADE.
5. CONTRACTOR SHALL PROVIDE POSITIVE FINISHED SLOPE AWAY FROM BUILDING.

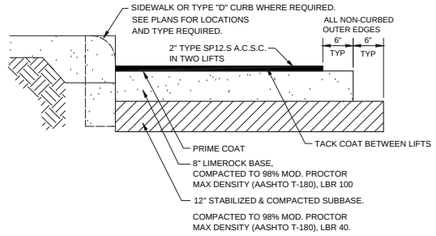

HEAVY DUTY PAVEMENT

DETAIL

NTS

REV	DATE	REVISION DESCRIPTION	BY	CH	COR	APP	ORG	REV	DATE	REVISION DESCRIPTION	BY	CH	COR	APP	ORG

brph
www.brph.com Copyright © 2012
5700 North Harbor City Blvd | Suite 400 | Melbourne | FL | 32940 | 321-254-7166

Architects, Engineers, Constructors
Offices in Melbourne, West Palm Beach, Orlando, Fort Myers, Atlanta, Savannah
Board of Architecture License No. AA C000149
Board of Professional Engineers License No. 1439
These plans are protected by Federal Copyright protection. Unauthorized use may result in an infringement action.

DRAWN BY	APPROVED BY
GXA	CCV
DESIGNED BY: GXA	DATE: 11-06-12
CHECKED BY: CCV	CAD CODE

FPL

SYSTEM	DISCIPLINE	PLANT/UNIT
	CIVIL	FPL TURKEY POINT
SCALE: AS SHOWN	CAD FILE NAME	TITLE: DRY STORAGE WAREHOUSE 9700 SW 344 STREET HOMESTEAD, FLORIDA
DRAWING SIZE: 30" x 42"	FPL ARCHIVE NAME	
DRAWING NUMBER: CIVIL SITE PLAN		SHEET: C-101 / REV

FPGSYM/FPGBDR-E 9/90

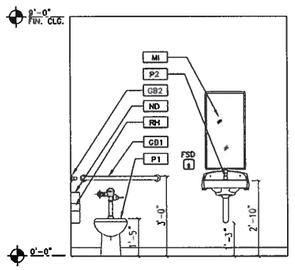

5 TYPICAL RESTROOM ELEVATION
1/2"=1'-0"

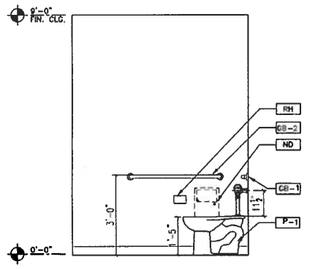

4 TYPICAL RESTROOM ELEVATION
1/2"=1'-0"

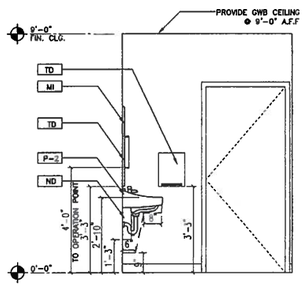

3 TYPICAL RESTROOM ELEVATION
1/2"=1'-0"

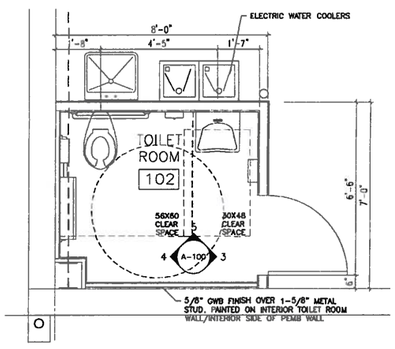

2 ENLARGED TOILET PLAN
1/2"=1'-0"

TOILET ACCESSORY SCHEDULE	
MARK	DESCRIPTION
FSD	STAINLESS STEEL FOAM SOAP DISPENSER
GB1	36" STAINLESS STEEL 1 1/2" ø HORIZONTAL GRAB BAR
GB2	42" STAINLESS STEEL 1 1/2" ø HORIZONTAL GRAB BAR
MI	POLISHED STAINLESS STEEL MIRROR 18"X36"
ND	SURFACE MOUNTED FEMININE NAPKIN DISPOSAL
P-1	NEW TOILET, COORDINATE WITH PLUMBING
P-2	NEW SINK, COORDINATE WITH PLUMBING
RH	TOILET ROLL HOLDER
TD	STAINLESS STEEL PAPER TOWEL DISPENSER

MATERIAL LEGEND:

B1 RUBBER BASE
B2 EPOXY FINISH WITH INTEGRAL BASE

C1 GWB STRUCTURE @ 9'-0" AFF-PAINTED
C2 EXPOSED STRUCTURE-PAINTED

F1 SEALED CONCRETE
F2 EPOXY FINISH WITH INTEGRAL BASE

W1 ECO-FRIENDLY, LOW VOC PAINT

NOTES:

1. PROVIDE MOISTURE RESISTANT GYPSUM WALL BOARD ON BOTH SIDES OF WET WALL
2. PROVIDE EPOXY PAINT TO 4'-0" AFF IN TOILET ROOM.

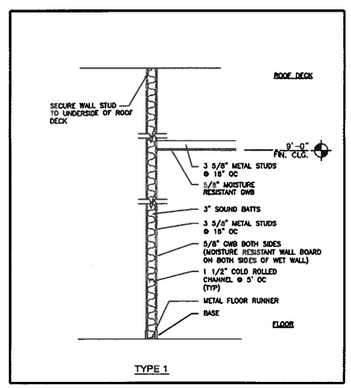

TYPE 1

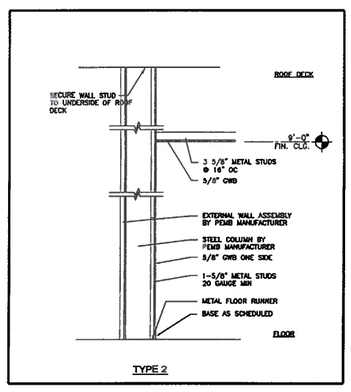

TYPE 2

6 WALL TYPES
1/4"=1'-0"

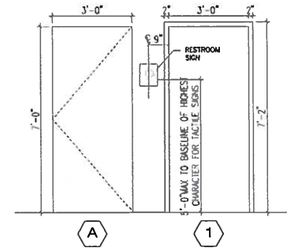

7 DOOR AND FRAME TYPES
1/2"=1'-0"

DOOR SCHEDULE											
NUMBER	DOOR					FRAME		THRESHOLD	FIRE RATING LABEL	NOTES
	TYPE	SIZE			MATL	MATL	TYPE			
		WD	HGT	THK						
102	A	3'-0"	7'-0"	1 3/4"	SC	HM	1	3/4" UNDERCUT	--	--

ROOM FINISH SCHEDULE									
NUMBER	ROOM NAME	FLOOR	BASE	WALLS				CEILING	NOTES
				N	S	E	W	MATL	
101	STORAGE	F1	--	W1	W1	W1	W1	C2	BASE B1 AT TOILET ROOM WALLS
102	TOILET ROOM	F2	B2	W1	W1	W1	W1	C1	EPOXY PAINT TO 4'-0" AFF

GENERAL NOTES

A. ALL EXTERIOR ASSEMBLIES SHALL COMPLY WITH SMALL AND LARGE MISSILE IMPACT CRITERIA IN ACCORDANCE WITH FLORIDA BUILDING CODE 2010 AND SHALL BE COMPLIANT WITH A MIAMI-DADE NOA.

B. CONTINUOUS FOAM BACKER ROD AND SEALANT TYPICAL AROUND ALL DOORS AND LOUVERS

C. ALL EXTERIOR HOLLOW METAL DOOR FRAMES SHALL BE GALVANIZED AND PAINTED

D. SEALANT COLOR SHALL MATCH WALL COLOR

KEY NOTES:

2-1 ADJUST GRADES AT BUILDING EXTERIOR SO WATER DRAINS AWAY FROM BUILDING PERIMETER
3-1 PRECAST CONCRETE SPLASH BLOCK
5-1 STRUCTURAL STEEL-PAINT ALL VISIBLE STEEL
7-1 24 GAUGE STAINLESS STEEL GUTTER PER CONTRACT; SEE PEMB DRAWINGS FOR EAVE CONDITIONS
7-2 24 GAUGE STAINLESS STEEL RAIN WATER LEADER
7-3 1" STAINLESS STEEL STRAP @ 72" OC
7-4 METAL ROOF PANEL-SEE PEMB DRAWINGS
7-5 METAL WALL PANEL-SEE PEMB DRAWINGS
7-6 ALUMINUM DRIP EDGE AT DOOR HEAD
8-1 HOLLOW METAL DOOR-GALVANIZED AND PAINTED; GREENHECK EVH-660D MIAMI-DADE NOA #12-0418.06
8-2 OVERHEAD COILING DOOR-GALVANIZED AND PAINTED (BY PRE-ENGINEERED METAL BUILDING MANUFACTURER)
8-3 FIXED METAL LOUVER-GALVANIZED AND PAINTED
9-1 PAINT ALL INTERIOR WALLS/VISIBLE STEEL
10-1 METAL STORAGE SHELVING
10-2 FIRE EXTINGUISHER
13-1 PRE-ENGINEERED METAL BUILDING

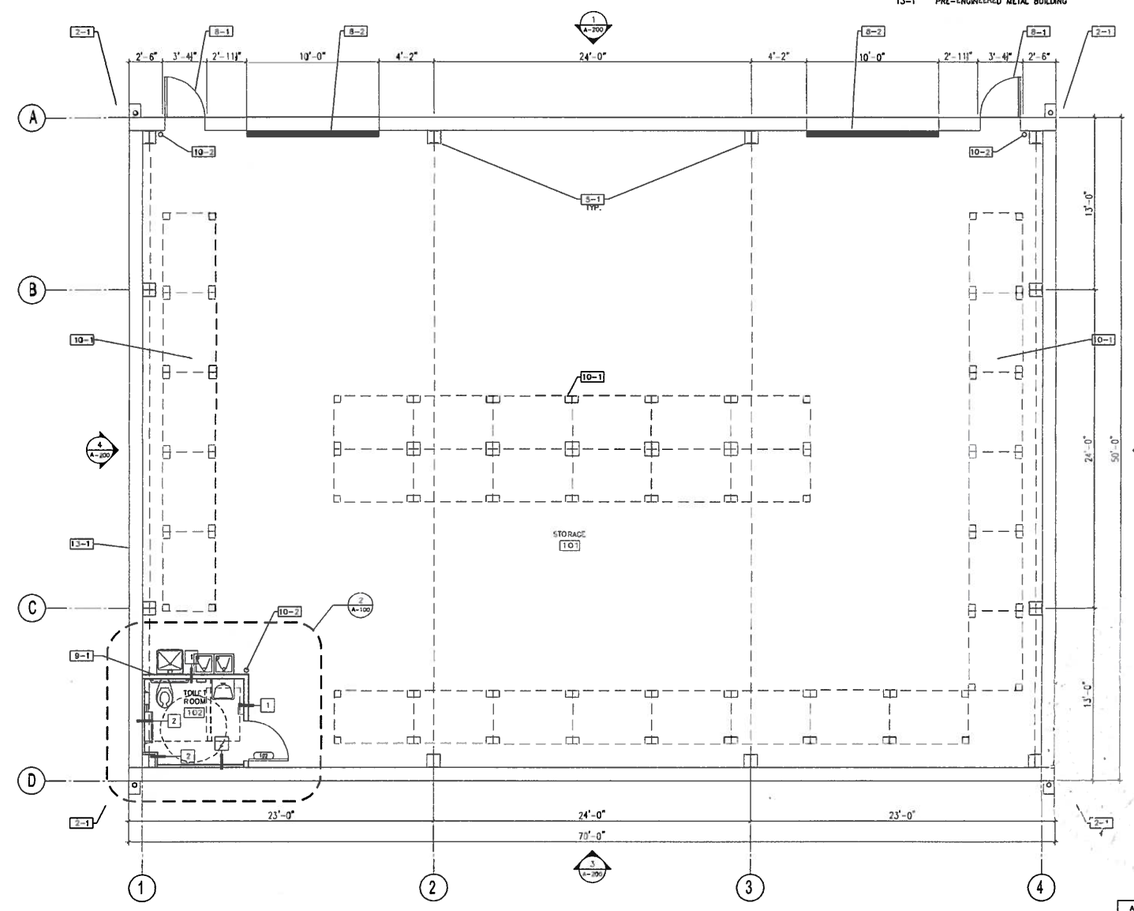

1 FIRST FLOOR PLAN
1/4"=1'-0"

SCALE: 1/4" = 1'-0"
SCALE: 1/2" = 1'-0"

ARCHITECT OF RECORD
MICHAEL F. NEVES JR
AR 94827

01.30.2014

brph
www.brph.com
Copyright: © 2012
Architects, Engineers, Constructors
Offices in Melbourne, West Palm Beach, Orlando, Fort Myers, Atlanta, Savannah
Board of Architecture License No. AA C000149
Board of Professional Engineers License No. 1439
These plans are protected by Federal Copyright protection. Unauthorized use may result in an infringement action.

DRAWN BY	MFH
APPROVED BY	PXR
DESIGNED BY	MFH
DATE	11-06-12
CHECKED BY	PXR
CAD CODE	

FPL

SYSTEM	
DISCIPLINE	ARCH
PLANT/UNIT	FPL TURKEY POINT
SCALE	AS SHOWN
CAD FILE NAME	
TITLE	DRY STORAGE WAREHOUSE 9700 SW 344 STREET HOMESTEAD, FLORIDA
DRAWING SIZE	30" x 42"
FPL ARCHIVE NAME	
DRAWING NUMBER	FLOOR PLAN & DETAILS
SHEET	A-100
REV	

REV	DATE	REVISION DESCRIPTION	BY	CH	COR	APP	ORG	REV	DATE	REVISION DESCRIPTION	BY	CH	COR	APP	ORG

GENERAL NOTES

A. ALL EXTERIOR ASSEMBLIES SHALL COMPLY WITH SMALL AND LARGE MISSILE IMPACT CRITERIA IN ACCORDANCE WITH FLORIDA BUILDING CODE 2010

B. CONTINUOUS FOAM BACKER ROD AND SEALANT TYPICAL AROUND ALL DOORS AND LOUVERS

C. ALL EXTERIOR HOLLOW METAL DOOR FRAMES SHALL BE GALVANIZED AND PAINTED

D. SEALANT COLOR SHALL MATCH WALL COLOR

KEY NOTES:

2-1	ADJUST GRADES AT BUILDING EXTERIOR SO WATER DRAINS AWAY FROM BUILDING PERIMETER
3-1	POLYCARBONATE SPLASH BLOCK
7-1	24 GAUGE STAINLESS STEEL GUTTER PER CONTRACT; SEE PEMB DRAWINGS FOR EAVE CONDITIONS
7-2	24 GAUGE STAINLESS STEEL RAIN WATER LEADER
7-3	1" STAINLESS STEEL STRAP @ 72" OC
7-4	METAL ROOF PANEL-SEE PRE-ENGINEERED METAL BUILDING MANUFACTURER DRAWINGS
7-5	METAL WALL PANEL-SEE PRE-ENGINEERED METAL BUILDING MANUFACTURER DRAWINGS
7-6	ALUMINUM DRIP EDGE AT DOOR HEAD
8-1	HOLLOW METAL DOOR-GALVANIZED AND PAINTED
8-2	OVERHEAD COILING DOOR-GALVANIZED AND PAINTED
8-3	FIXED METAL LOUVER-GALVANIZED AND PAINTED; GREENHECK EVH-660D MIAMI-DADE NOA #12-0418.06
13-1	PRE-ENGINEERED METAL BUILDING

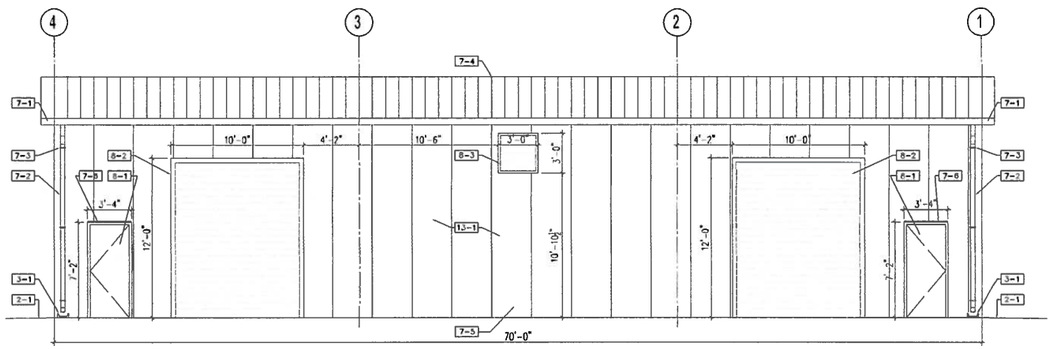

1 NORTH ELEVATION
1/4"=1'-0"

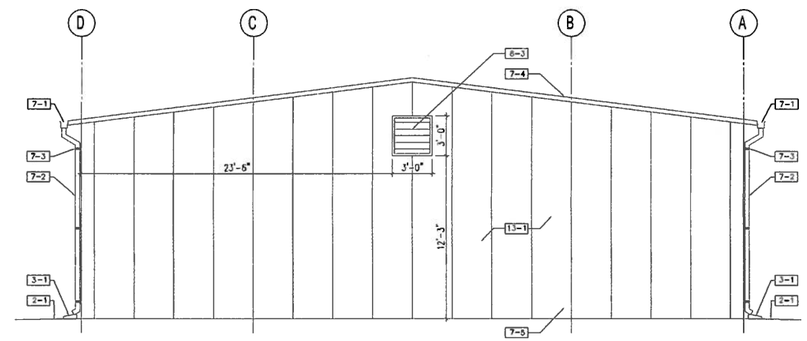

2 EAST ELEVATION
1/4"=1'-0"

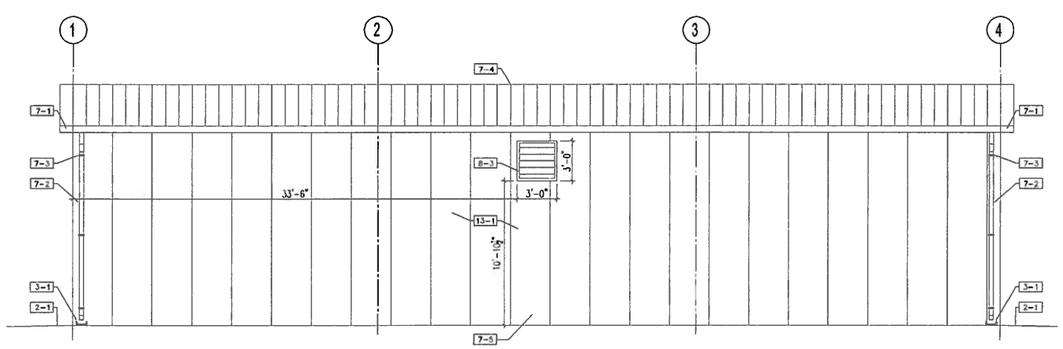

3 SOUTH ELEVATION
1/4"=1'-0"

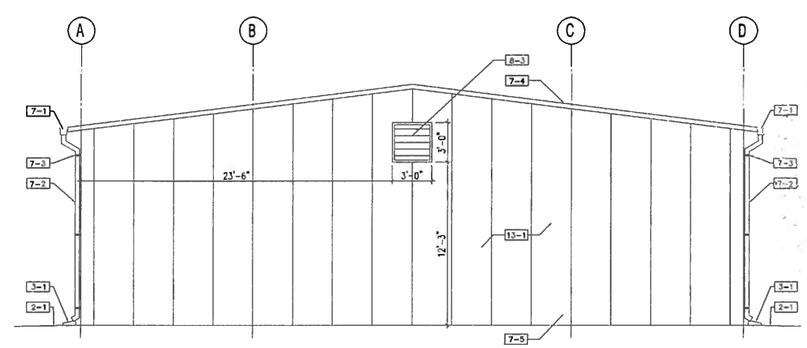

4 WEST ELEVATION
1/4"=1'-0"

01.30.2014

SCALE: 1/4" = 1'-0"

ARCHITECT OF RECORD
MICHAEL F HEWES JR
AR 94827

brph
www.brph.com
Copyright © 2012

Architects, Engineers, Constructors
Offices in Melbourne, West Palm Beach, Orlando, Fort Myers, Atlanta, Savannah
Board of Architecture License No. AA C000149
Board of Professional Engineers License No. 1429
These plans are protected by Federal Copyright protection. Unauthorized use may result in an infringement action.

DRAWN BY	MFH
APPROVED BY	PXR
DESIGNED BY	MFH
DATE	11-06-12
CHECKED BY	PXR
CAD EDGE	

FPL

SYSTEM	DISCIPLINE: ARCH	PLANT UNIT: FPL TURKEY POINT
SCALE: AS SHOWN	CAD FILE NAME	TITLE: DRY STORAGE WAREHOUSE 9700 SW 344 STREET HOMESTEAD, FLORIDA
DRAWING SIZE: 30" x 42"	FPL ARCHIVE NAME	
DRAWING NUMBER: ELEVATIONS		SHEET: A-200 REV

REV	DATE	REVISION DESCRIPTION	BY	CH	COR	APP	ORG	REV	DATE	REVISION DESCRIPTION	BY	CH	COR	APP	ORG

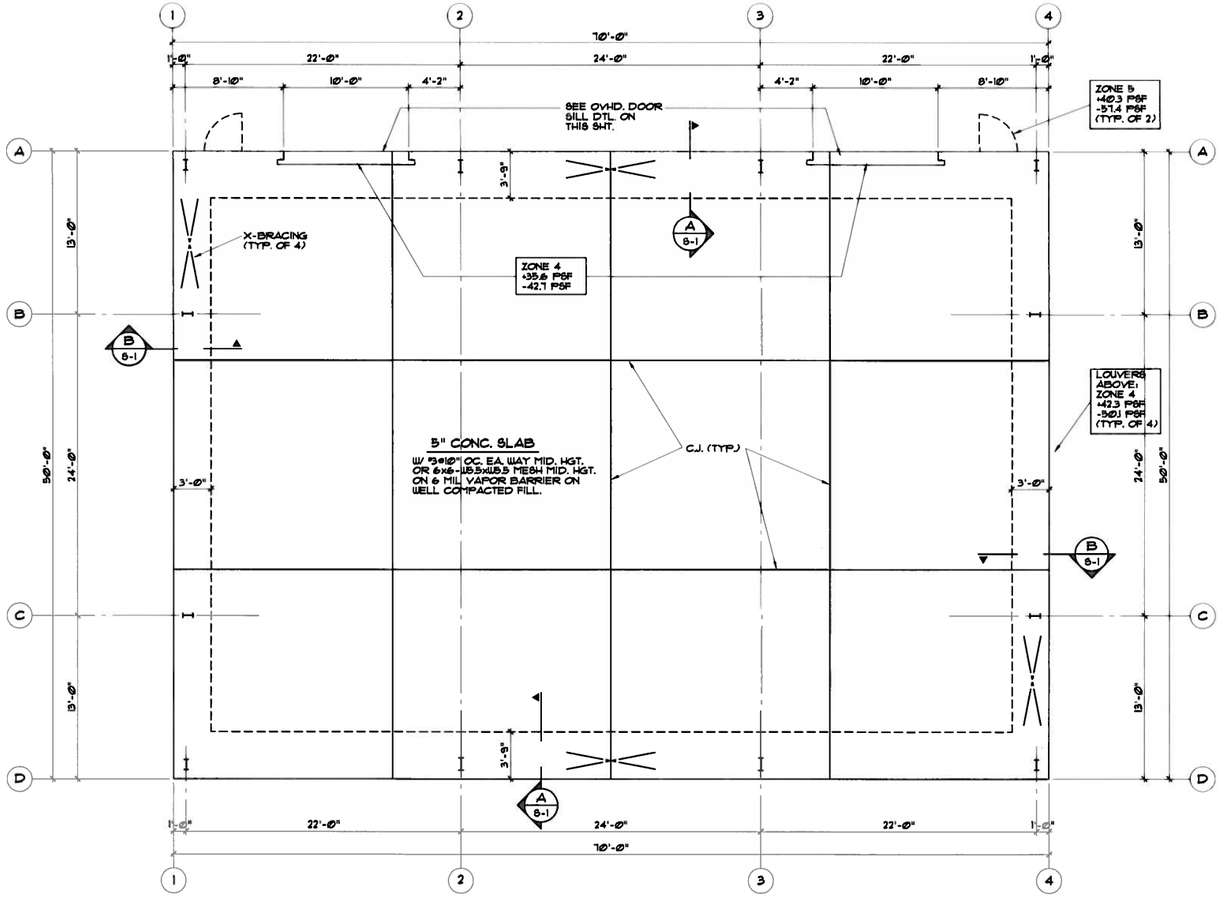

FOUNDATION PLAN

3/16" = 1'-0"

WIND PRESSURES NOTE:

ALL WIND PRESSURES FOR FRAME OPENINGS SHOWN ARE WORKING STRESS.

MAX. COLUMN REACTIONS

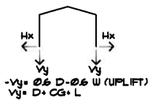

COL.	KIPS -Vy UPL.	Vy	Hin (T)	Hout (C)
1A	6.3	2.1	-	-
1B	13.01	15.2	4.6	5.1
1C	9.8	15.2	4.6	5.1
1D	2.3	2.8	-	-
2A	20.0	34.2	11.0	13.6
2D	20.2	34.2	11.0	13.6
3A	20.1	34.2	11.0	13.6
3D	20.1	34.2	11.0	13.6
4A	2.4	2.8	-	-
4B	9.8	15.2	5.1	4.6
4C	13.0	15.2	5.1	4.6
4D	6.3	2.1	-	-

REACTIONS AS PROVIDED BY MTL. BLDG. MANUF.

NOTES:

1.- ANCHOR BOLTS AS DESIGNED BY THE MTL. BLDG. MANUF. ANCHOR BOLTS SIZES AND LAYOUTS AS PER THE SIGNED AND SEALED SHOP DWGS. AND CALCS. BY THE SPECIALTY ENGINEER OF PREFAB. MTL. BLDG. MANUF.

LENGTHS PROVIDED BY THE E.O.R. AND ANCHOR BOLTS SUPPLIED AND INSTALLED BY CONTRACTOR.

2.- ANCHOR BOLTS, NUTS AND WASHERS TO BE HOT-DIP GALVANIZED.

GENERAL STRUCTURAL NOTES

FOUNDATIONS / SOIL STATEMENTS:

1. SPREAD FOOTINGS. (SHOP DRAWINGS FOR CONCRETE AND REINFORCEMENT REQUIRED
2. AS STATED IN THE GEOTECHNICAL REPORT PREPARED BY PEICO, FILE # 45369, DATED MAY 21, 2003, NEAREST APPLICABLE BORING LOCATION B-4
   THE SOIL CONSISTS OF LIGHT BROWN FRAGMENTS (POORLY GRADED GRAVEL) DOWN TO 4' FROM THE SOIL ELEVATION ENCOUNTERED AT THAT DATE
   THE WATER LEVEL WAS FOUND AT 4' DOWN ALSO
   THE FOUNDATION WAS DESIGNED ASSUMING 2,500 PSF BEARING CAPACITY OF THE SOIL AND THE DEPTH OF THE FOUNDATION WAS CONSIDERED IN ORDER TO BE ABOVE THE REPORTED WATER LEVEL.
   THE GEOTECHNICAL ENGINEER SHOULD PROVIDE THE RECOMMENDATIONS FOR SOIL PREPARATION AND COMPACTION REQUIREMENTS AND SHOULD CONFIRM THE ADEQUACY OF THE SOIL FOR THE ASSUMED 2,500 PSF BEARING CAPACITY
   NOTIFY ENGINEER OF ANY DISCREPANCY IN SOIL BEARING CAPACITY AND THE SUB SOIL CONDITIONS BEFORE PROCEEDING WITH THE WORK.
3. TOP OF FOOTINGS ARE AT SAME ELEVATION AT JUNCTURE OF WALL FOOTING AND COLUMN FOOTING. WALL FOOTING REINFORCEMENT TO RUN CONTINUOUS THROUGH COLUMN FOOTING. BOTTOM OF FOOTING OF HIGHER FOOTING SLOPE TO BOTTOM OF LOWER FOOTING AT 1 VERTICAL TO 2 HORIZONTAL SLOPE.

CONCRETE:

1. ALL POURED IN PLACE CONCRETE f'c = 4,000 PSI. AT 28 DAYS.
2. ALL CONCRETE WORK IN ACCORDANCE WITH "SPECIFICATIONS FOR STRUCTURAL CONCRETE FOR BUILDINGS" (A.C. 301-LATEST EDITION) UNLESS OTHERWISE NOTED (NON)
3. NO ADMIXTURES PERMITTED WITHOUT WRITTEN APPROVAL OF ENGINEER.

REINFORCING STEEL:

1. TO BE NEW BILLET STEEL CONFORMING TO LATEST ASTM. A-615 GRADE 60 SPECIFICATIONS, FABRICATED IN ACCORDANCE WITH MANUAL OF STANDARD PRACTICE OF THE C.R.S., UNLESS OTHERWISE NOTED AND PLACING IN ACCORDANCE WITH AC BUILDING CODE AND MANUAL OF STANDARD PRACTICE.
2. COLUMN DOWELS, BARS SIZE AND NUMBER OF VERTICALS ABOVE. LAP 36 BAR DIAMETER, MINIMUM 18 INCHES.
3. MINIMUM COVERS: FOOTINGS 3; COLUMNS 2; BEAMS 1-1/2; INTERIOR SLABS 3/4 EXPOSED SLABS 1-1/2 UNLESS OTHERWISE NOTED.
4. REINFORCEMENT, LAPPED 36 BAR DIAMETER, MINIMUM 18" BOTTOM BARS SPLICED AT SUPPORTS. TOP BARS AT MIDSPAN AND HOOKED AT NON-CONTINUOUS EDGES.
5. TEMPERATURE REINFORCEMENT IN SLABS, PERPENDICULAR TO MAIN STEEL IN SECOND LAYER. SLABS 4" T: # 2" T: #4 @ 9" & 4" # 18" & 4" # 2"
6. REINFORCEMENT SHOWN ON PLANS IS BOTTOM UNLESS MARKED T (TOP BARS).
7. SUBMIT ONE BEPIA AND ONE PRINT OF SHOP DRAWINGS FOR ENGINEER'S APPROVAL BEFORE STARTING FABRICATION.

GENERAL:

1. STRUCTURAL DRAWINGS SHALL BE WORKED TOGETHER WITH ARCHITECTURAL AIR CONDITIONING, MECHANICAL AND ELECTRICAL DRAWINGS TO LOCATE DEPRESSED SLABS, SLOPES, DRAINS, OUTLETS, RECESSES, OPENINGS, REGLETS, BOLT SETTINGS, SLEEVES, DIMENSIONS, ETC., DISCREPANCIES SHALL BE BROUGHT TO THE ATTENTION OF THE ARCHITECT-ENGINEER BEFORE PROCEEDING WITH THE WORK.
2. CONTRACTOR TO VERIFY ALL DIMENSIONS AND CONDITIONS AT JOB SITE BEFORE STARTING WORK. BRING ALL DISCREPANCIES TO THE ATTENTION OF THE ARCHITECT-ENGINEER BEFORE PROCEEDING WITH THE WORK.

PRE-ENGINEERED METAL BUILDING DESIGN LOADS:

COLLATERAL LOAD: 25 PSF
COLLATERAL UPLIFT Ø PSF
ROOF LIVE LOAD: 20 PSF NON-REDUCIBLE (FOR SLOPED ROOF)
WIND LOAD: 166 MPH (ULTIMATE) 144 MPH (NOMINAL)
EXPOSURE "C"
ENCLOSED STRUCTURE (Gcpi=+/-Ø.180)
RISK CATEGORY III (ESSENTIAL FACILITIES)
AS PER 2010 FBC (MIAMI-DADE COUNTY) AND ASCE 7-10 WIND PARAMETERS.

PRODUCT CONTROL APROVALS (NOA):

ROOF PANELS: NOA# 08-0402.21
WALL PANELS: NOA# 09-0505.01

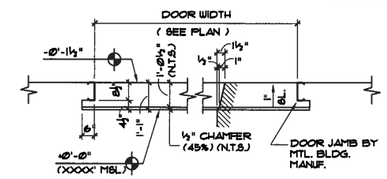

TYP. OVERHEAD DOOR SILL DETAIL

3/8" = 1'-0"

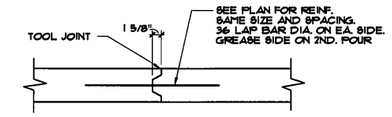

TYP. FLOOR CONSTRUCTION JOINT (CNJ)

NOT TO SCALE

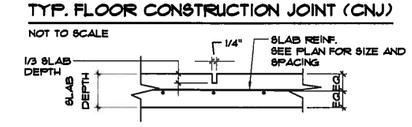

SAW CUT JOINT 12 HOURS AFTER CONC. POURED BUT NO LATER THAN 24 HOURS.

TYPICAL SAW CUT JOINT (C.J.)

NOT TO SCALE

CONCRETE SLAB NOTE:

THE CONCRETE SLAB DESIGN IS ADEQUATE TO SUSTAIN THE FOLLOWING LOADS:

1.- FORKLIFT "FDA050" FRONT TIRES (115 PSI).
2.- FORKLIFT REAR TIRES (140 PSI).
3.- 9,000 LBS CAPACITY LULL MODEL 944E-42 (MAX. 59 PSI TIRES).
4.- RACK ASSEMBLY AT 4,000 LBS LOADING PER LEG.

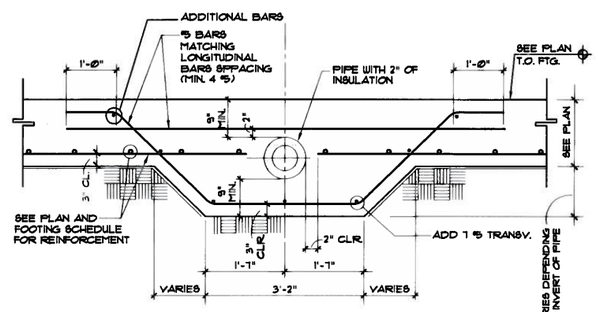

TYPICAL DETAIL OF UTILITY PIPE THRU WALL FOOTING

3/4" = 1'-0"

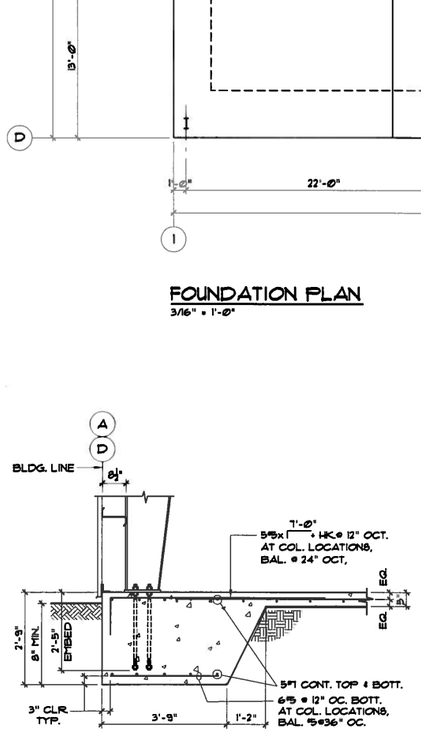

SECTION A 8-1

1/2" = 1'-0"

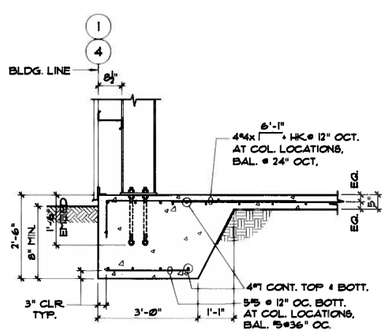

SECTION B 8-1

1/2" = 1'-0"

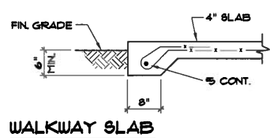

WALKWAY SLAB

THICKENED EDGE OF SLAB DETAIL

NOT TO SCALE

STRUCTURAL ENGINEER
ROBERTO J. GARCIA-T RON P.E.
FL. REG. No. 38636

design-builder:

lemartec
engineering & construction corporation
11740 s.w. 80th st. • miami, florida 33183 usa • (305)273-8676 • www.lemartec.com

V3 BUILDINGS

brph
Architects, Engineers, Constructors
Offices in Melbourne, West Palm Beach, Orlando, Fort Myers, Atlanta, Savannah
Board of Architecture: License No. AA C000149
Board of Professional Engineers License No. 1439
www.brph.com Copyright © 2012
These plans are protected by Federal Copyright protection. Unauthorized use may result in an infringement action.

DRAWN BY	APPROVED BY
DESIGNED BY	DATE 01-23-14
CHECKED BY	CAD CODE

FPL

SYSTEM	DESCIPLINE	PLANT/UNIT	FPL TURKEY POINT
SCALE	CAD FILE NAME	TITLE	DRY STORAGE WAREHOUSE 9700 SW 344 STREET HOMESTEAD, FLORIDA
DRAWING SIZE	FPL ARCHIVE NAME		
DRAWING NUMBER		SHEET S-1	REV

REV	DATE	REVISION DESCRIPTION	BY	CH	COR	APP	ORG	REV	DATE	REVISION DESCRIPTION	BY	CH	COR	APP	ORG

VP BUILDINGS
VARCO PRUDEN
a division of BlueScope Buildings North America, Inc.

DRAWING INDEX

DRAWING TITLE	PAGES
Cover Sheet	1
Notes	2
Anchor Rod Plan	3-4
Primary Structural	5-9
Secondary Structural	12,15-19
Covering	22-26
Special Drawings	
Standard Erection Details	10,11,13,14
~~Planograph Details~~	20,21,27,28

DRAWING RELEASE HISTORY

TYPE	DATE	DESCRIPTION
APPROVAL DWG.s	11/2/12	FOR APPROVAL- NOT FOR CONSTRUCTION
PERMIT DRAWINGS	11/7/12	PERMIT SET- For Building Dept. Approval

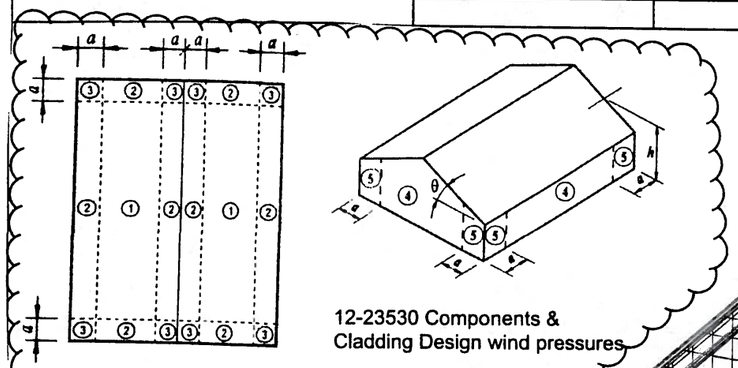

12-23530 Components & Cladding Design wind pressures

Zone	Pressure psf	Suction psf
1	26.1	41.4
2	26.1	72.1
3	26.1	106.6
4	41.4	44.8
5	41.4	55.2

a = 5 feet

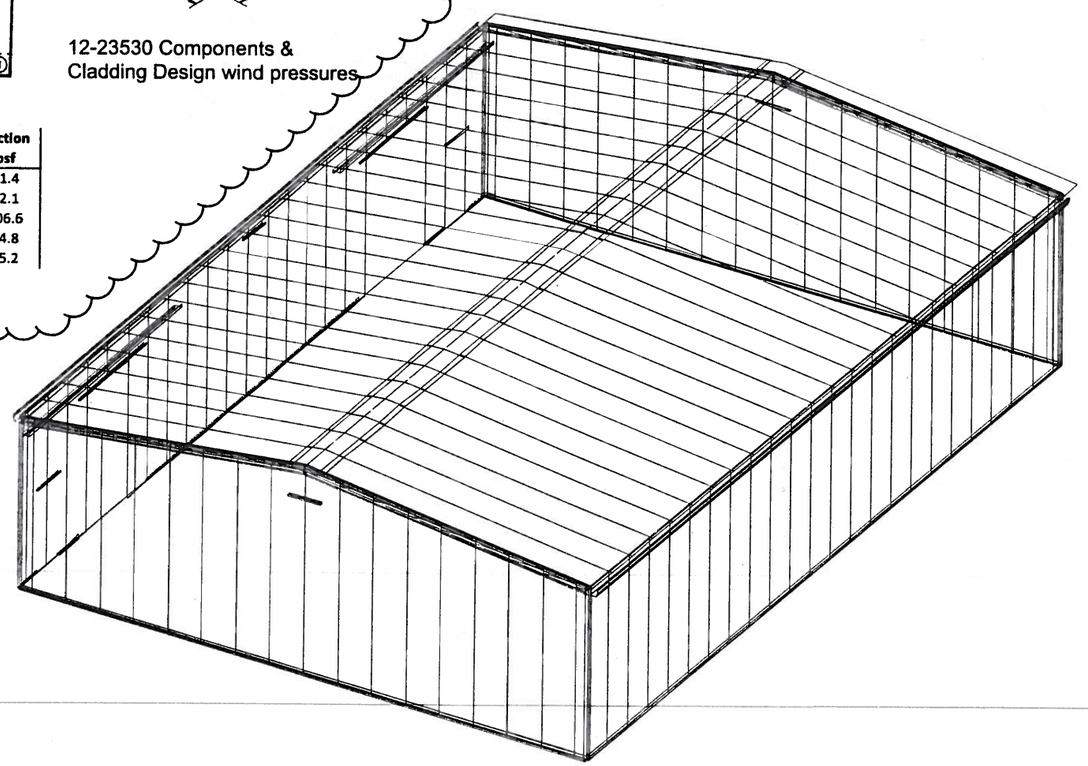

GENERAL NOTES

MATERIALS

	ASTM DESIGNATION	
3 PLATE WELDED SECTIONS	A529, A572, A1011, A1018	GRADE 55
COLD FORMED LIGHT GAGE SHAPES	A653, A1011	GRADE 60
BRACE RODS	A572, A510	GRADE 50
HOT ROLLED MILL SHAPES	A36, A529, A572, A588, A709, A992	GRADE 36 OR 50
HOT ROLLED ANGLES	A529, A572, A588, A709, A992	GRADE 50
HOLLOW STRUCTURAL SECTION (HSS)	A500	GRADE B
CLADDING	A653, A792	GRADE 50 OR GRADE 80

A325 & A490 BOLT TIGHTENING REQUIREMENTS

IT IS THE RESPONSIBILITY OF THE ERECTOR TO ENSURE PROPER BOLT TIGHTNESS IN ACCORDANCE WITH APPLICABLE REGULATIONS. SEE RCSC SPECIFICATION FOR STRUCTURAL JOINTS USING A325 OR A490 BOLTS FOR MORE INFORMATION. SEE ERECTION GUIDE FOR BOLT TIGHTENING INSTRUCTIONS. THE FOLLOWING CRITERIA MAY BE USED TO DETERMINE THE BOLT TIGHTNESS (I.E.-SNUG TIGHT OR PRE-TENSION) UNLESS REQUIRED OTHERWISE BY LOCAL JURISDICTION OR CONTACT.

ALL A490 BOLTS SHALL BE "PRE-TENSIONED". A325 BOLTS IN PRIMARY FRAMING AND BRACING CONNECTIONS MAY BE " SNUG-TIGHT" EXCEPT AS FOLLOWS;

PRE-TENSION A325 BOLTS IF BUILDING SUPPORTS A CRANE GREATER THAN 5 TON CAPACITY.

PRE-TENSION A325 BOLTS IF BUILDING SUPPORTS MACHINERY THAT CREATES VIBRATION, IMPACT, OR STRESS REVERSALS ON CONNECTIONS.

PRE-TENSION A325 BOLTS IF LOCATED IN HIGH SEISMIC AREAS. FOR IBC BASED CODES; HIGH SEISMIC IS DESIGN CATEGORY D, E OR F. SEE CODES AND LOADS SECTION BELOW FOR DETAILS.

PRE-TENSION ANY CONNECTION WITH DESIGNATION A325-SC. SLIP CRITICAL (SC) CONNECTIONS MUST BE FREE OF PAINT, OIL, OR OTHER MATERIALS THAT REDUCE FRICTION AT CONTACT SURFACES. GALVANIZED OR LIGHTLY RUSTED SURFACES ARE ACCEPTABLE.

IN CANADA ALL A325 AND A490 BOLTS SHALL BE "PRE-TENSIONED", EXCEPT FOR SECONDARY MEMBERS AND FLANGE BRACES.

SECONDARY MEMBERS AND FLANGE BRACE CONNECTIONS ARE ALWAYS "SNUG TIGHTENED" UNLESS INDICATED OTHERWISE IN ERECTION DRAWING DETAILS.

CODES AND LOADS

WHEN MULTIPLE BUILDINGS ARE INVOLVED, SPECIFIC LOAD FACTORS FOR DIFFERING OCCUPANCIES, BUILDING DIMENSIONS, HEIGHTS, FRAMING SYSTEMS, ROOF SLOPES, ETC., MAY RESULT IN DIFFERENT LOAD APPLICATION FACTORS THAN INDICATED BELOW. SEE CALCULATIONS FOR FURTHER DETAILS. WIND LOADS ARE APPLIED TO OVERALL BUILDING ENVELOPE. COMMON WALLS BETWEEN CONNECTED SHAPES ARE NOT SUBJECT TO EXTERNAL WIND LOADS.

Building Code: 2010 Florida State Building Code (HVHZ=SFI)
Dry Stge Building: Building Use:Essential Facility, Collateral Gravity: 25.00 psf (Not Including bldg wt)
LIVE LOADS AND RAINFALL
Roof Live Load 20.00 psf (Not Reducible)
Rainfall: 12.00 inches per hour
CONCRETE FOUNDATIONS Compressive Strength (Min.) - f'c: 3000 psi

SNOW LOAD
Ground Snow: 0.00 psf, Flat Roof Snow: 0.00 psf, Design Snow (Sloped): 0.00 psf
Snow Exposure Category (Factor): 1 Fully Exposed (0.90)
Snow Importance: 1.000 Thermal Category (Factor): Heated (1.00)

WIND LOAD
The 'Low Rise' Method is Used
Wind Speed: 186.00 mph, Wind Exposure: C
Basic Wind Pressure: 63.90 psf
Wind Importance Factor: 1.000, FT= Topographic Factor: 1.0000
Wind Enclosure: Enclosed, 0.180
Note: All windows, doors, skylights and other covered openings must be designed for the specified above wind loads

EARTHQUAKE DESIGN DATA
Lateral Force Resisting Systems using Equivalent Force Procedure
N/A

LARRY L. BOOZER
LICENSE
No. 44236
STATE OF FLORIDA
PROFESSIONAL ENGINEER

11/13/12
Larry L. Boozer, P.E. No. 44236
VP Buildings, Inc.
7031 Albert Pick Rd., Suite 200
Greensboro, NC 27409

VP Buildings 3200 Players Club Circle Memphis TN 38125

THE VP ENGINEER'S SEAL APPLIES ONLY TO THE WORK PRODUCT OF VP AND DESIGN AND PERFORMANCE REQUIREMENTS SPECIFIED BY VP. THE VP ENGINEER'S SEAL DOES NOT APPLY TO THE PERFORMANCE OR DESIGN OF ANY OTHER PRODUCT OR COMPONENT FURNISHED BY VP EXCEPT TO ANY DESIGN OR PERFORMANCE REQUIREMENTS SPECIFIED BY VP.

THIS DRAWING, INCLUDING THE INFORMATION HEREON, REMAINS THE PROPERTY OF VP BUILDINGS. IT IS PROVIDED SOLELY FOR ERECTING THE BUILDING DESCRIBED IN THE APPLICABLE PURCHASE ORDER AND SHALL NOT BE MODIFIED, REPRODUCED OR USED FOR ANY OTHER PURPOSE WITHOUT PRIOR WRITTEN APPROVAL OF VP BUILDINGS.

THE GENERAL CONTRACTOR AND/OR ERECTOR IS SOLELY RESPONSIBLE FOR ACCURATE GOOD QUALITY WORKMANSHIP IN ERECTING THIS BUILDING IN ACCORDANCE WITH THIS DRAWING, DETAILS REFERENCED IN THIS DRAWING, ALL APPLICABLE VP BUILDINGS ERECTION GUIDES, AND INDUSTRY STANDARDS PERTAINING TO PROPER ERECTION, INCLUDING THE CORRECT USE OF TEMPORARY BRACING.

CANICSA A660 QUASAR Certified

IAS ACCREDITED AC472

COVER SHEET

BUILDER	Lemartec Eng. & Const. Corp.	VP BUILDINGS VARCO PRUDEN	JOB # 12-23530
CUSTOMER	Florida Power and Light		DATE 11/7/2012
LOCATION	Homestead, Florida		DRAWN / CHECK VPC / JLB
PROJECT	FPL-Dry Storage Building		PAGE 1
BUILDER'S PO#	2706-12158	VPC VERSION: 2012.3	

BUILDER/CONTRACTOR RESPONSIBILITIES

VP Buildings follows the guidelines as outlined in the AISC and MBMA Codes of Standard Practice. VP Buildings standard product specifications, design, fabrication, quality criteria shall govern all work unless stipulated otherwise in the contract documents. In case of discrepancies between VP Buildings structural plans and plans for other trades, VP Building structural plans shall govern.

It is the responsibility of the Builder to obtain approvals and permits from all governing agencies and jurisdictions as required. Approval of VP Building drawings constitutes the builders acceptance of VP interpretation of the contract purchase order. Unless specific design criteria concerning interface design and details are furnished as part of the contract, VP Buildings design assumptions shall govern.

VP engineers are not Project Engineers or Engineer of Record for the overall project. VP engineering supply sealed engineering design data and drawings for VP supplied material as part of the overall project for use by others to obtain permits, approvals, and coordinate with other trades. The Builder or A/E firm are responsible for the overall project coordination, including coordination with appropriate inspection and testing agencies. All interface and/or compatibility of any materials not furnished by VP are to be considered and coordinated by the builder or A/E firm.

CONSTRUCTION & ERECTION RESPONSIBILITY

The Builder is responsible for construction in strict accordance with VP Buildings "FOR CONSTRUCTION" drawings and all applicable product installation guides. VP is not responsible for work done from any other drawings that are not marked "FOR CONSTRUCTION", nor any drawings prepared by others.

As erected field assemblies of members shall be as specified in MBMA Metal Building Systems Manual Sec. 6 (in Canada - CSA S16-01 Clause 29.7), which generally require L/500 tolerance of assembled members. Occasional field work including shimming, cutting, coping and drilling for final fit-up are considered part of erection. Specified field work and field welding conditions indicted on these drawings shall also be included in the erectors scope of work. See Erection Guide for shimming procedures. For buildings with top riding bridge cranes see Crane Data drawing for column plumb tolerance.

The building erector shall be properly licensed and experienced in erecting metal building systems. The Builder is responsible for having knowledge of, and shall comply with, all OSHA requirements and all other governing site safety criteria. The builder is responsible for designing, supplying, locating and installing temporary supports and bracing during erection of the building. VP bracing is designed for code required loads after building completion and shall not be considered as adequate erection bracing. See Erection Guide.

EXISTING STRUCTURES

VP must be advised of any existing structure that is within 20 ft. of VP's building. Loadings of both buildings may be affected when adjacent buildings are within this distance. VP cannot be responsible for the design or loading of existing buildings.

BRACING

Tension brace rods work in pairs to balance forces caused by initial tensioning. Care must be taken while tightening brace rods so as not to cause accidental or misalignment of components. All rods must be installed loose and then tightened. Rods should not exhibit excessive sag. For long or heavy rods, or angles it may be necessary to support the rod at mid-bay by suspending it from a secondary member.

Bracing for seismic or wind loading of objects or equipment that are not a part of the VP structure must be designed by a qualified professional to deliver lateral loads to primary frames and rod bracing struts. Equipment bracing and suspension connections must not impose torsion or minor axis loads, or cause local distortion in any VP components. VP accepts no responsibility for design or installation of bracing systems not furnished by VP.

FIELD WELDING

All field welding shall be done at the direction of a design professional, and done in accordance with governing requirements (AWS in USA, CWB in Canada) by welders qualified to perform the welding as directed by the applicable welding procedure specification (WPS). A WPS shall be prepared by the contractor for each welding variation specified. The contractor is responsible for any special welding inspection as required by local jurisdiction. Filler metal shall be 70 ksi (480 MPa) tensile strength. For welds in high seismic force resisting system (Seismic Cat D, E or F), minimum Charpy V-Notch toughness shall meet AISC-341 criteria (20 ft-lbs min @ 0Deg F). Interpass temperatures shall not exceed 550Deg F (300Deg C).

DELIVERIES

It is the responsibility of the builder to have adequate equipment available at the job site to unload trucks in a safe and timely manner. The Builder will be responsible for all retention charges from carriers as a result of job site unloading delays.

Claims for damage or shorts MUST be noted on the Bill-of-Lading or delivery receipt and filed against the carrier by the consignee as per VP's Terms of Sales (F.O.B. Plant) under the Uniform Commercial Code. It is critical that damages or shorts be noted on the Bill-of-Lading or you have little recourse with the carrier. Immediately upon delivery of material, material quantities are verified by the Builder against quantities billed on the shipping document. Neither the Manufacturer nor the carrier is responsible for material shortages against quantities billed on the shipping document if such shortages are not noted on the shipping documents upon delivery of material and acknowledged by the carriers agent. For materials concealed in bundles, boxes, or crates, shortages must be reported immediately upon unpacking. Should products get wet, bundled and crated materials must be unpacked and unbundled immediately to provide drainage of trapped moisture. See Erection Guide for proper job site storage procedure.

SEALANTS

Sealants shall be applied in strict accordance with VP details or weather tightness will be compromised.
Sealant must be applied in temperatures and weather conditions consistent with labeling.
Butyl Sealants - Service Temperature Range (Degrees): Min -60F (-51C); Max 220F (104C)
Tape sealants - Service Temperature Range (Degrees): Min -60F (-51C); Max 212F (100C)

INDEPENDENT MEZZANINES

Independent mezzanines must be designed by a professional engineer. The engineer must ensure that proper isolation from the VP building has been provided to avoid structural damage due to differential movements, or inadvertently apply loads to the VP structure. VP accepts no responsibility for the design of the independent mezzanine.

FIRE CODE COMPLIANCE

It is the responsibility of the project design professional and builder to comply with local fire code regulations including consideration of, but not limited to, building use and occupancy, all building construction materials, separation requirements, egress requirements, fire protection systems, etc. Builder shall advise VP of any special requirements to be furnished by VP.
SSR roof fire tested to ASTM E108-93-Class A rating.
VP steel roof systems are defined by IBC as Fire Class A roof assemblies.
VP SSR steel roof systems are available for FM Class 1 fire rating.
UL 263 approved fire rated assemblies listed as Design No. P265, P268 and P516.

FIELD MODIFICATIONS

Modifications to this building from details and instructions contained on these drawings must be approved in writing by VP Building engineers, or other licensed structural engineer. This includes, but is not limited to, removal of roof or wall cladding, removing or moving any flange braces or rod braces, cutting of openings for doors, windows or RTU's, correction of fabrication errors, etc. The owner shall not impose loads to this structure beyond what is specified for this building in the contract documents. VP Buildings, Inc. accepts no responsibility for the consequences of any unauthorized additions, alterations, or added loads to this structure.

If the builder intends to invoice VP Buildings for modifications in excess of $1000, The builder must notify VP Buildings immediately, and obtain a Work Authorization from VP Buildings prior to proceeding.
All final claims must be submitted to VP Buildings with all supporting documentation within 30 days of the building completion. Claims submitted without work authorizations, or after 30 days will not be accepted. Correction of minor misfits, shimming and plumbing, moderate amount of reaming, drilling, chipping / cutting and minor welding are considered by Code of Standard Practice to be part of erection are not subject to claim reimbursement.

CONCRETE/MASONRY/CONVENTIONAL STUD WALLS

The engineer responsible for the design of the wall system is responsible for coordinating with, or specifying to VP Buildings, any wall to steel compatibility issues such as drift and deflection compatibility, special base details, and wall to VP steel connections. All fasteners, sealant and counter flashing of wall systems are to be provided by contractor. The engineer responsible for the wall shall design the anchorage to VP supporting elements consistent with Code required forces.

PANELS

Oil canning is an inherent characteristic of cold formed steel panels. It is the result of several factors that include induced stresses in the raw material delivered to VP, fabrication methods, installation procedures, and post installation thermal forces. Thru fastened panels will exhibit some dimpling when installed, especially when insulation is installed between panels and secondary supports. Dimpling can be minimized by careful installation, taking care not to over drive fasteners.

Roof rumble is a phenomenon that is caused by wind gusts lifting up on the roof panels and then springing back into place. All panels experience this action to some degree, especially with concealed clip standing seam panels. Roof rumble noise may be minimized by providing a layer of blanket insulation between the panels and any hard support surface such as steel secondary members, substrates such as plywood, steel decking, or rigid board insulation. A minimum of 3 inch thick blanket is recommended over steel secondary members, or 2 inch over substrates.

Oil canning, dimpling, and roof rumble do not affect the structural integrity or weather tightness of the panels and is not grounds for rejection of panels.

The standing seam joint detail is designed with an interlocking feature for ease of installation. However, it is imperative that installed SSR/SLR panels be secured to the secondary structural members and properly seamed prior to departure from the job site each day.

SKYLIGHTS

VP's Tuflites have been tested to support a 300 lb. load over a 1 sq. ft.. area, as well as uniform gravity and uplift load test. Local building departments may require added fall restraint due to conditions that may affect the skylight structural integrity. It is the responsibility of the builder to determine and provide any added fall restraint under the skylight as may be required by your building department.

RAIN WATER RUNOFF

Drainage systems must be designed by the project professional to comply with code requirements. VP is not responsible for drainage designs, overflow scuppers, down piping, etc. The project professional and contractor are responsible to ensure that primary drains and overflow devices such as scuppers and auxillary drains are provided as required for the required rain intensity at the building perimeter and at valley conditions to prevent ponding.

STEEL SHOP COAT

The purpose of VP's shop coat is to provide protection for the steel members during transportation, during temporary job site storage and during erection. Standard shop formulation is not designed to perform as a finish coat when exposed to environmental conditions. Members shall be kept free of the ground and properly drained during job site storage. It is the Builder's responsibility to ensure that if a finish coat is being applied over VP shop coat that the painting contractor verifies compatibility between his finish coat and VP's shop coat.

Fabricator Approvals
IAS FA304; IAS FA377; IAS FA378; IAS FA388; IAS FA389; IAS FA409; IAS FA432;
IAS FA455; IAS FA456; Los Angeles, CA #FB00031; CITY OF HOUSTON 767

Canadian CSA A660 Certifications
VPBMO0; VPBWI9; BUTPA0; BUTNC0; BUTCA0;

Engineering Certifications of Authorization
USA--AR#576; FL#28566; ID#C-2470; IL#184-002649; KS#E-29; MS#E-0592; MO#E-2010007736;
NC#F-0998; OK#CA4170PE; SD#C-1787; TX#F4828; WV#C03059-00
CAN--AB#P08900; NS#30123; YT#PP134

ICC Evaluation Reports (www.icc-es.org)
SSR Roof System - #ER-5621
TufLites- ER-5048

State of Florida Product Approvals (www.floridabuilding.org)
Approved Products Listed Under VP Buildings, Inc.
VP TextureClad - See Transamerican Structuroc, Inc.

Dade Co. Product Approval (www.miamidade.gov/buildingcode)
Approved Products Listed Under Varco Pruden Buildings, Inc.
VP TextureClad - See Transamerican Structuroc, Inc.

Underwriter's Laboratory Approvals
SSR Roof-UL#TGKX-113; SSR Composite Roof Class 90-UL#TGKX-113A; SSR Roof w/Super Block Class 90-UL#TGKX-328;
Panel Rib Roof UL Class 60-UL#TGKX-60; Panel Rib Roof UL Class 90-UL#TGKX-84;
VP SLR/AEP SL Roof Class 90-UL#TGKX-90

Factory Mutual Approved Assemblies (Available Only When Specified In Contact)
SSR Roof Systems are approved in various type applications and listed in FM Approval Guide.
24 Ga SSR (0.0227" Nominal), is available in Class 1-60, 1-75, 1-90. 22Ga SSR (0.0277" Nominal), is available in Class 1-75, 1-90-, 1-120.
SLR Roof Systems are approved in various type applications and listed in FM Approval Guide.
24 Ga SLR (0.0227" Nominal), is available in Class 1-75 and 1-120.

Army Corps Of Engineers
SSR Roof System - CEGS 07416
SLR Roof System - (AEP-SPAN; SPAN-LOK) - CEGS 07416

Dade Co. Product Approval
PR Roof:
NOA09-0402.21
File Classification High velocity hurricane zone
Category Roofing
Subcategory Deck - Roof
Material Steel
Applicant Varco-Pruden Buildings, Inc. a Div. of BluScope
File Status File Approved
Expiration_Date March/7/2014
Impact_Rate Large and Small Missile Impact
Description 0.022" (min.) 1-3/16" x 36" Steel Structural Roof Panel

LARRY L. BOOZER
LICENSE
No. 44236
STATE OF FLORIDA
PROFESSIONAL ENGINEER

11/13/12

Larry L. Boozer, P.E. No. 44236
VP Buildings, Inc.
7031 Albert Pick Rd , Suite 200
Greensboro, NC 27409

PERMIT SET- For Building Dept. Approval

THE VP ENGINEER'S SEAL APPLIES ONLY TO THE WORK PRODUCT OF VP AND DESIGN AND PERFORMANCE REQUIREMENTS SPECIFIED BY VP. THE VP ENGINEER'S SEAL DOES NOT APPLY TO THE PERFORMANCE OR DESIGN OF ANY OTHER PRODUCT OR COMPONENT FURNISHED BY VP EXCEPT TO ANY DESIGN OR PERFORMANCE REQUIREMENTS SPECIFIED BY VP.

THIS DRAWING, INCLUDING THE INFORMATION HEREON, REMAINS THE PROPERTY OF VP BUILDINGS. IT IS PROVIDED SOLELY FOR ERECTING THE BUILDING DESCRIBED IN THE APPLICABLE PURCHASE ORDER AND SHALL NOT BE MODIFIED, REPRODUCED OR USED FOR ANY OTHER PURPOSE WITHOUT PRIOR WRITTEN APPROVAL OF VP BUILDINGS.

THE GENERAL CONTRACTOR AND/OR ERECTOR IS SOLELY RESPONSIBLE FOR ACCURATE GOOD QUALITY WORKMANSHIP IN ERECTING THIS BUILDING IN ACCORDANCE WITH THIS DRAWING, DETAILS REFERENCED IN THIS DRAWING, ALL APPLICABLE VP BUILDINGS ERECTION GUIDES, AND INDUSTRY STANDARDS PERTAINING TO PROPER ERECTION, INCLUDING THE CORRECT USE OF TEMPORARY BRACING.

VP Buildings
3200 Players Club Circle Memphis TN 38125

REV	DATE	BY	DESCRIPTION

NTS

11/1/2012 12:20:03

Erection Notes

BUILDER	Lemartec Eng. & Const. Corp.
CUSTOMER	Florida Power and Light
LOCATION	Homestead, Florida
PROJECT	FPL-Dry Storage Building
BUILDER'S PO#	2706-12158
FILENAME:	2706-12158-FPL-Dry Storage Building copy 2 from FW

VP BUILDINGS
VARCO PRUDEN

VPC VERSION: 2012.3

JOB # 12-23530
DATE 11/7/2012
DRAWN/CHECK VPC / JLB
PAGE 2

A Division of BlueScope Buildings North America, Inc.

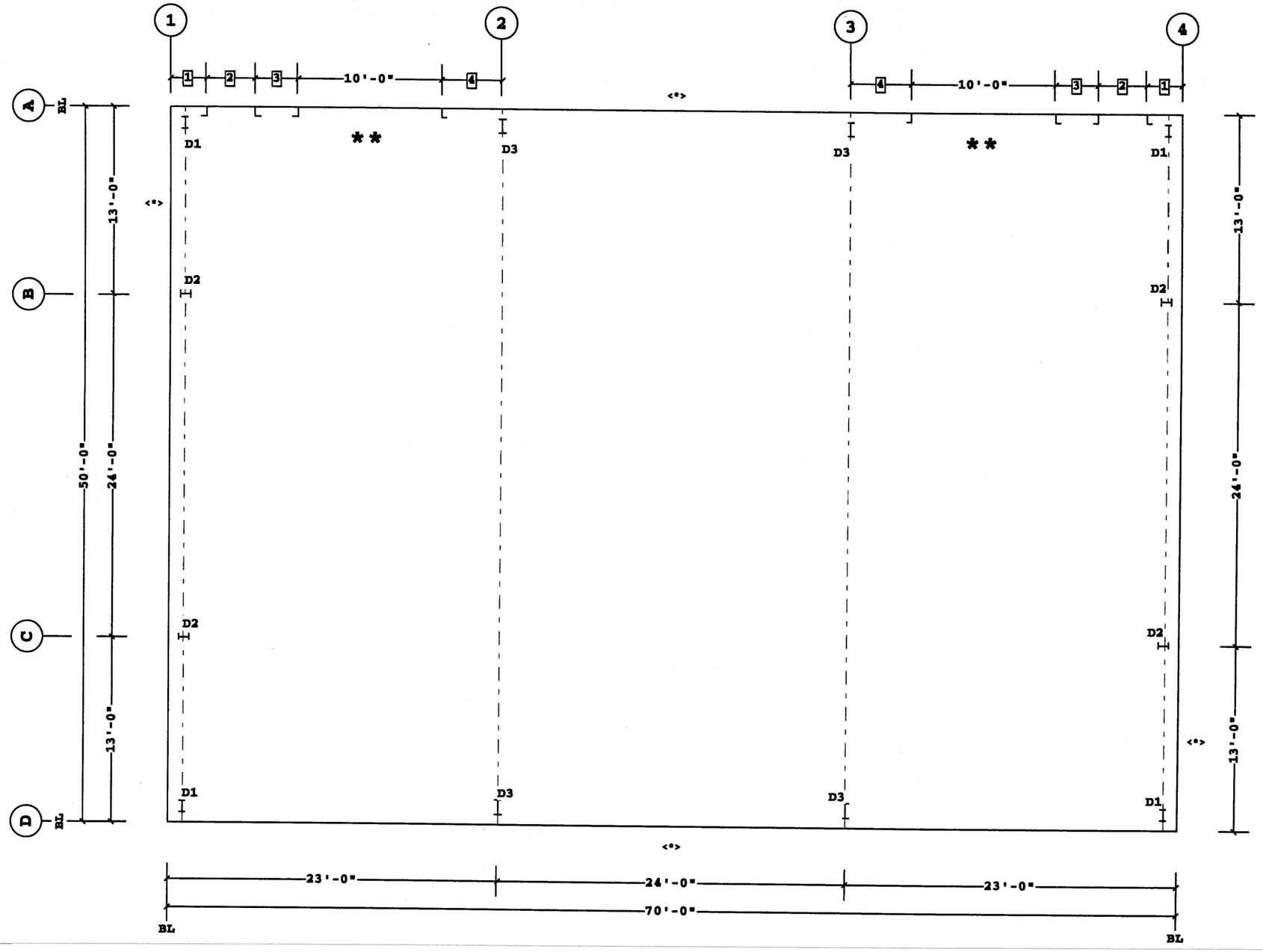

4 4'-2"
3 2'-11 1/2"
2 3'-4 1/2"
1 2'-6"
Dimension Key

ANCHOR ROD PLAN

LARRY L. BOOZER
LICENSE
No. 44236
STATE OF FLORIDA
PROFESSIONAL ENGINEER

11/13/12

Larry L. Boozer, P.E. No. 44236
VP Buildings, Inc.
7031 Albert Pick Rd., Suite 200
Greensboro, NC 27409

PERMIT SET- For Building Dept. Approval

<*> THE BUILDING IS DESIGNED WITH BRACING DIAGONALS IN THE DESIGNATED BAYS. COLUMN BASE REACTIONS, BASE PLATES AND ANCHOR RODS ARE AFFECTED BY THIS BRACING AND DIAGONALS MAY NOT BE RELOCATED WITHOUT CONSULTING THE BUILDING SUPPLIERS ENGINEER.

THE VP ENGINEER'S SEAL APPLIES ONLY TO THE WORK PRODUCT OF VP AND DESIGN AND PERFORMANCE REQUIREMENTS SPECIFIED BY VP. THE VP ENGINEER'S SEAL DOES NOT APPLY TO THE PERFORMANCE OR DESIGN OF ANY OTHER PRODUCT OR COMPONENT FURNISHED BY VP EXCEPT TO ANY DESIGN OR PERFORMANCE REQUIREMENTS SPECIFIED BY VP.

Finished Floor Elevation = 100'-0" (Unless Noted Otherwise)

THIS DRAWING, INCLUDING THE INFORMATION HEREON, REMAINS THE PROPERTY OF VP BUILDINGS. IT IS PROVIDED SOLELY FOR ERECTING THE BUILDING DESCRIBED IN THE APPLICABLE PURCHASE ORDER AND SHALL NOT BE MODIFIED, REPRODUCED OR USED FOR ANY OTHER PURPOSE WITHOUT PRIOR WRITTEN APPROVAL OF VP BUILDINGS.

THE GENERAL CONTRACTOR AND/OR ERECTOR IS SOLELY RESPONSIBLE FOR ACCURATE GOOD QUALITY WORKMANSHIP IN ERECTING THIS BUILDING IN ACCORDANCE WITH THIS DRAWING, DETAILS REFERENCED IN THIS DRAWING, ALL APPLICABLE VP BUILDINGS ERECTION GUIDES, AND INDUSTRY STANDARDS PERTAINING TO PROPER ERECTION, INCLUDING THE CORRECT USE OF TEMPORARY BRACING.

VP Buildings
3200 Players Club Circle Memphis TN 38125

REV	DATE	BY	DESCRIPTION

NTS

11/1/2012 12:19:48

ANCHOR ROD PLAN

BUILDER	Lemartec Eng. & Const. Corp.
CUSTOMER	Florida Power and Light
LOCATION	Homestead, Florida
PROJECT	FPL-Dry Storage Building
BUILDER'S PO#	2706-12158
FILENAME	2706-12158-FPL-Dry Storage Building copy 2 from TW

VP BUILDINGS
VARCO PRUDEN

VPC VERSION: 2012.3

JOB #	12-23530
DATE	11/7/2012
DRAWN/CHECK	VPC / JLB
PAGE	3

A Division of Riverstone Buildings North America, Inc.

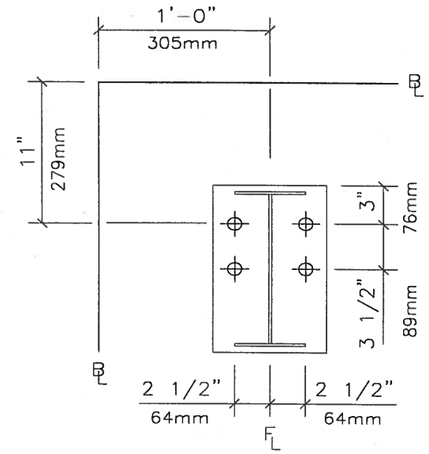

D1 (4)3/4" Dia. GR36 A.Rods
Plate W=8" L=11"
Elev.=100'-0"

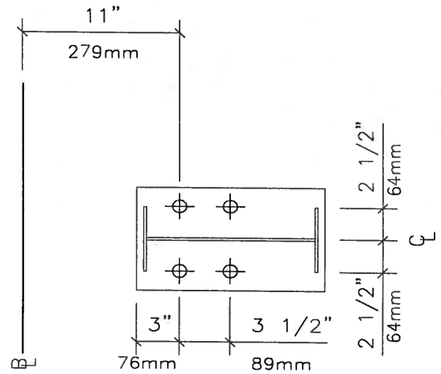

D2 (4)3/4" Dia. GR36 A.Rods
Plate W=8" L=10"
Elev.=100'-0"

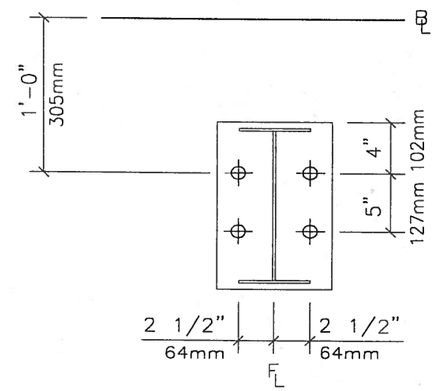

D3 (4)3/4" Dia. GR36 A.Rods
Plate W=8" L=1'-1"
Elev.=100'-0"

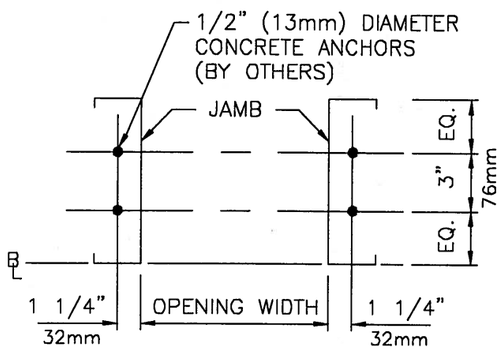

NOTE: 1" (25mm) PROJECTION ABOVE BOTTOM OF JAMB CLIP

JAMB 'EQ.' VALUES:

7" EQ = 2" 51mm, 8 1/2" EQ = 2 3/4" 70mm
10" EQ = 3 1/2" 89mm, 11 1/2" EQ = 4 1/4" 108mm

FRAMED OPENING DETAIL

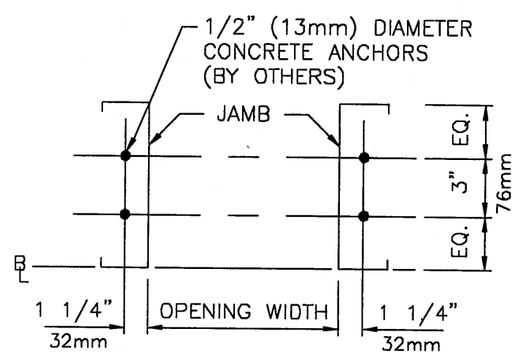

NOTE: 1" (25mm) PROJECTION ABOVE BOTTOM OF JAMB CLIP

JAMB 'EQ.' VALUES:

7" EQ = 2" 51mm, 8 1/2" EQ = 2 3/4" 70mm
10" EQ = 3 1/2" 89mm, 11 1/2" EQ = 4 1/4" 108mm

FRAMED OPENING DETAIL

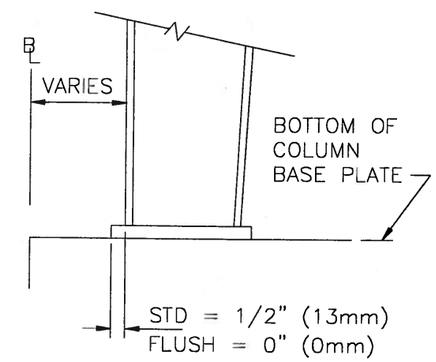

TYPICAL COLUMN BASE PLATE DETAIL

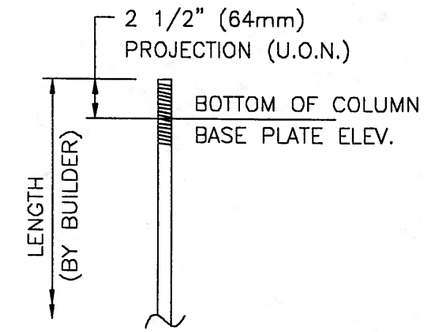

TYPICAL ANCHOR ROD PROJECTION

1. CONCRETE, GROUT, ANCHOR RODS, AND ANY OTHER EMBEDDED ITEMS ARE TO BE FURNISHED BY OTHERS.
2. ANCHOR ROD DIAMETERS WERE DETERMINED BY ALLOWABLE SHEAR AND TENSION PER AISC SPECIFICATIONS (FY=36KSI). ANCHOR ROD LENGTH, EFFECTS OF EMBEDDED ANCHOR ROD EDGE DIMENSIONS AND METHOD OF TRANSFERRING FORCES FROM ANCHOR RODS TO FOOTINGS ARE TO BE DETERMINED BY OTHERS.
3. UNLESS OTHERWISE SPECIFIED, ANCHOR RODS ARE DETAILED WITH A PITCH AND GAGE OF 5 INCHES ASSUMING "CAST-IN-PLACE" ANCHOR RODS WITH "SNUG TIGHT" CONNECTIONS.
4. FOUNDATION MUST BE LEVEL, SQUARE AND SMOOTH. ANCHOR RODS MUST BE ACCURATELY PLACED AS SHOWN ON THIS DRAWING OR STEEL WILL NOT FIT.
5. THE BUILDER IS RESPONSIBLE FOR ACCURATE SETTING OF ANCHOR RODS WITHIN INDIVIDUAL COLUMN ROD GROUPS -TOLERANCE +-1/8". DIMENSIONS BETWEEN ANCHOR ROD GROUPS - TOLERANCE +-1/4". ERECTION OF STEEL COMPONENTS MUST BE STRAIGHT AND PLUMB PER MBMA CODE OF STANDARD PRACTICE.
6. DESIGN LOADS AND REACTIONS ARE FURNISHED IN THE REACTIONS REPORT.

LARRY L. BOOZER
LICENSE
No. 44236
STATE OF FLORIDA
PROFESSIONAL ENGINEER

11/13/12

Larry L. Boozer, P.E. No. 44236
VP Buildings, Inc.
7031 Albert Pick Rd., Suite 200
Greensboro, NC 27409

PERMIT SET- For Building Dept. Approval

THE VP ENGINEER'S SEAL APPLIES ONLY TO THE WORK PRODUCT OF VP AND DESIGN AND PERFORMANCE REQUIREMENTS SPECIFIED BY VP. THE VP ENGINEER'S SEAL DOES NOT APPLY TO THE PERFORMANCE OR DESIGN OF ANY OTHER PRODUCT OR COMPONENT FURNISHED BY VP EXCEPT TO ANY DESIGN OR PERFORMANCE REQUIREMENTS SPECIFIED BY VP.

THIS DRAWING, INCLUDING THE INFORMATION HEREON, REMAINS THE PROPERTY OF VP BUILDINGS. IT IS PROVIDED SOLELY FOR ERECTING THE BUILDING DESCRIBED IN THE APPLICABLE PURCHASE ORDER AND SHALL NOT BE MODIFIED, REPRODUCED OR USED FOR ANY OTHER PURPOSE WITHOUT PRIOR WRITTEN APPROVAL OF VP BUILDINGS.

THE GENERAL CONTRACTOR AND/OR ERECTOR IS SOLELY RESPONSIBLE FOR ACCURATE GOOD QUALITY WORKMANSHIP IN ERECTING THIS BUILDING IN ACCORDANCE WITH THIS DRAWING, DETAILS REFERENCED IN THIS DRAWING, ALL APPLICABLE VP BUILDINGS ERECTION GUIDES, AND INDUSTRY STANDARDS PERTAINING TO PROPER ERECTION, INCLUDING THE CORRECT USE OF TEMPORARY BRACING.

VP Buildings
3200 Players Club Circle Memphis TN 38125

REV	DATE	BY	DESCRIPTION

NTS

11/1/2012 12:19:49

ANCHOR ROD PLAN - DETAILS

BUILDER	Lemartec Eng. & Const. Corp.
CUSTOMER	Florida Power and Light
LOCATION	Homestead, Florida
PROJECT	FPL-Dry Storage Building
BUILDER'S PO#	2706-12158
FILENAME:	2706-12158-FPL-Dry Storage Building copy 2 from PW

VP BUILDINGS
VARCO PRUDEN

VPC VERSION: 2012.3

JOB #	12-23530
DATE	11/7/2012
DRAWN/CHECK	VPC / JLB
PAGE	4

Subsidiary of Blue Scope Buildings North America, Inc.

Rod and Strut Bolts

Id	Qty	Grade	Bolt Diam.	Bolt Length
1	4	A325	1"	3 1/2"

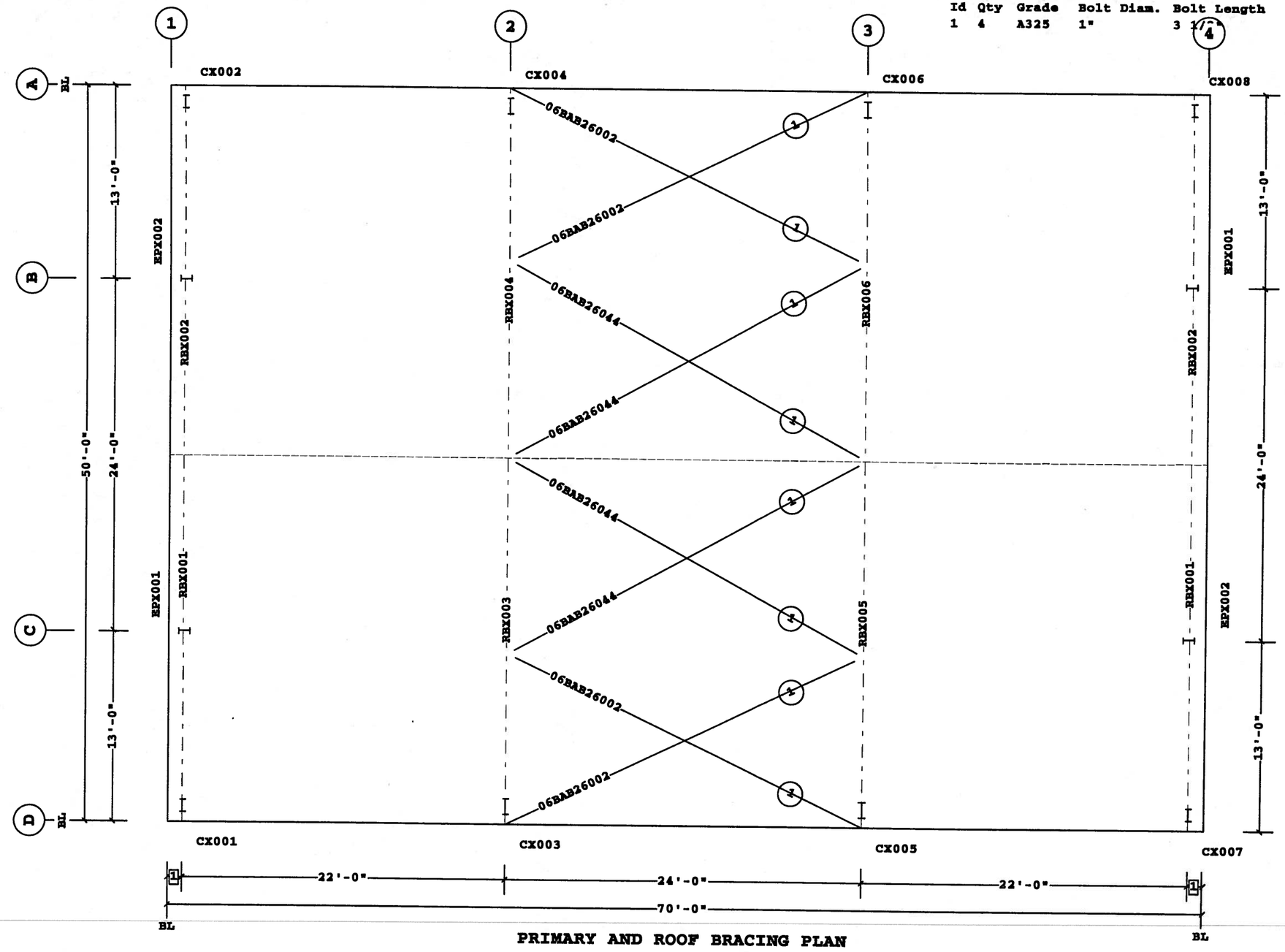

PRIMARY AND ROOF BRACING PLAN

1 1'-0"
Dimension Key

1. USE 1/2 X 1 1/2 A325 SNUG TIGHTENED BOLTS FOR ALL SECONDARY CONNECTIONS, SECONDARY CLIP CONNECTIONS, AND FLANGE BRACE CONNECTIONS, UNLESS NOTED OTHERWISE.
2. SLOT REINFORCEMENT PLATES NEED NOT BE LOCATED ON THE SAME SIDE OF THE WEB AS THE HILLSIDE WASHER.

THE VP ENGINEER'S SEAL APPLIES ONLY TO THE WORK PRODUCT OF VP AND DESIGN AND PERFORMANCE REQUIREMENTS SPECIFIED BY VP. THE VP ENGINEER'S SEAL DOES NOT APPLY TO THE PERFORMANCE OR DESIGN OF ANY OTHER PRODUCT OR COMPONENT FURNISHED BY VP EXCEPT TO ANY DESIGN OR PERFORMANCE REQUIREMENTS SPECIFIED BY VP.

Shape Name = Dry Stge Building

THIS DRAWING, INCLUDING THE INFORMATION HEREON, REMAINS THE PROPERTY OF VP BUILDINGS. IT IS PROVIDED SOLELY FOR ERECTING THE BUILDING DESCRIBED IN THE APPLICABLE PURCHASE ORDER AND SHALL NOT BE MODIFIED, REPRODUCED OR USED FOR ANY OTHER PURPOSE WITHOUT PRIOR WRITTEN APPROVAL OF VP BUILDINGS.

THE GENERAL CONTRACTOR AND/OR ERECTOR IS SOLELY RESPONSIBLE FOR ACCURATE GOOD QUALITY WORKMANSHIP IN ERECTING THIS BUILDING IN ACCORDANCE WITH THIS DRAWING, DETAILS REFERENCED IN THIS DRAWING, ALL APPLICABLE VP BUILDINGS ERECTION GUIDES, AND INDUSTRY STANDARDS PERTAINING TO PROPER ERECTION, INCLUDING THE CORRECT USE OF TEMPORARY BRACING.

VP Buildings
3200 Players Club Circle Memphis TN 38125

REV	DATE	BY	DESCRIPTION

NTS

11/1/2012 12:13:09

PERMIT SET- For Building Dept. Approval

PRIMARY AND ROOF BRACING PLAN

BUILDER	Lemartec Eng. & Const. Corp.
CUSTOMER	Florida Power and Light
LOCATION	Homestead, Florida
PROJECT	FPL-Dry Storage Building
BUILDER'S PO#	2706-12158

VP BUILDINGS
VARCO PRUDEN

VPC VERSION: 2012.3

JOB #	12-23530
DATE	11/7/2012
DRAWN/CHECK	VPC / JLB
PAGE	

FILENAME: 2706-12158-FPL-Dry Storage Building copy 2 from TW

A Division of Riverstone Buildings North America, Inc.

LARRY L. BOOZER
LICENSE
No. 44236
STATE OF FLORIDA
PROFESSIONAL ENGINEER

11/13/12

Larry L. Boozer, P.E. No. 44236
VP Buildings, Inc.
7031 Albert Pick Rd., Suite 200
Greensboro, NC 27409

Dimension Key

1	8 1/2"
2	3'-0"
3	1'-6"
4	1'-7 1/16"
5	4 @ 1'-6"
6	4 @ 1'-4 13/16"
7	18'-1 1/2" Ridge Ht.

Frame Member Schedule

Part	Width	Thick	WebThk.	Depth1	Depth2	Approx.Lgth	Approx.Weight	Detail
CX001	5.0000	.1345	.1345	10"	10"	14'-5 11/16"	158#	
RBX001	5.0000	.1875	.1345	11"	11"	23'-7 11/16"	293#	
	5.0000	.1875	.1345	11"	11"			
	5.0000	.1875	.1345	11"	11"			
RBX002	5.0000	.1875	.1345	11"	11"	23'-9"	293#	
	5.0000	.1875	.1345	11"	11"			
	5.0000	.1875	.1345	11"	11"			
CX002	5.0000	.1345	.1345	10"	10"	14'-5 11/16"	171#	
EPX001	5.0000	.1875	.1345	9"	9"	15'-0 3/16"	115#	BR25CA
EPX002	5.0000	.1875	.1345	9"	9"	15'-0 3/16"	128#	BR25CA

Frame Clearances

Horiz. Clearance between members 1(CX001) and 8(CX002): 46'-11"
Vert. Clearance at member 1(CX001): 13'-6 3/16"
Vert. Clearance at member 8(CX002): 13'-6 3/16"
Vert. Clearance at member 9(EPX001): 14'-11 7/8"
Vert. Clearance at member 10(EPX002): 14'-11 7/8"
Finished Floor Elevation = 100'-0" (Unless Noted Otherwise)

Bolt Connection & Plate Schedule

Id	Qty	Grade	Bolt Dia.	Bolt Length	Plate Thick.	Rows Out	Rows In	PartNo
A	4	A325	1/2"	1 1/2"	3/8"	1	1	49080
B	6	A325	1/2"	1 1/2"	3/8"	1	2	49080

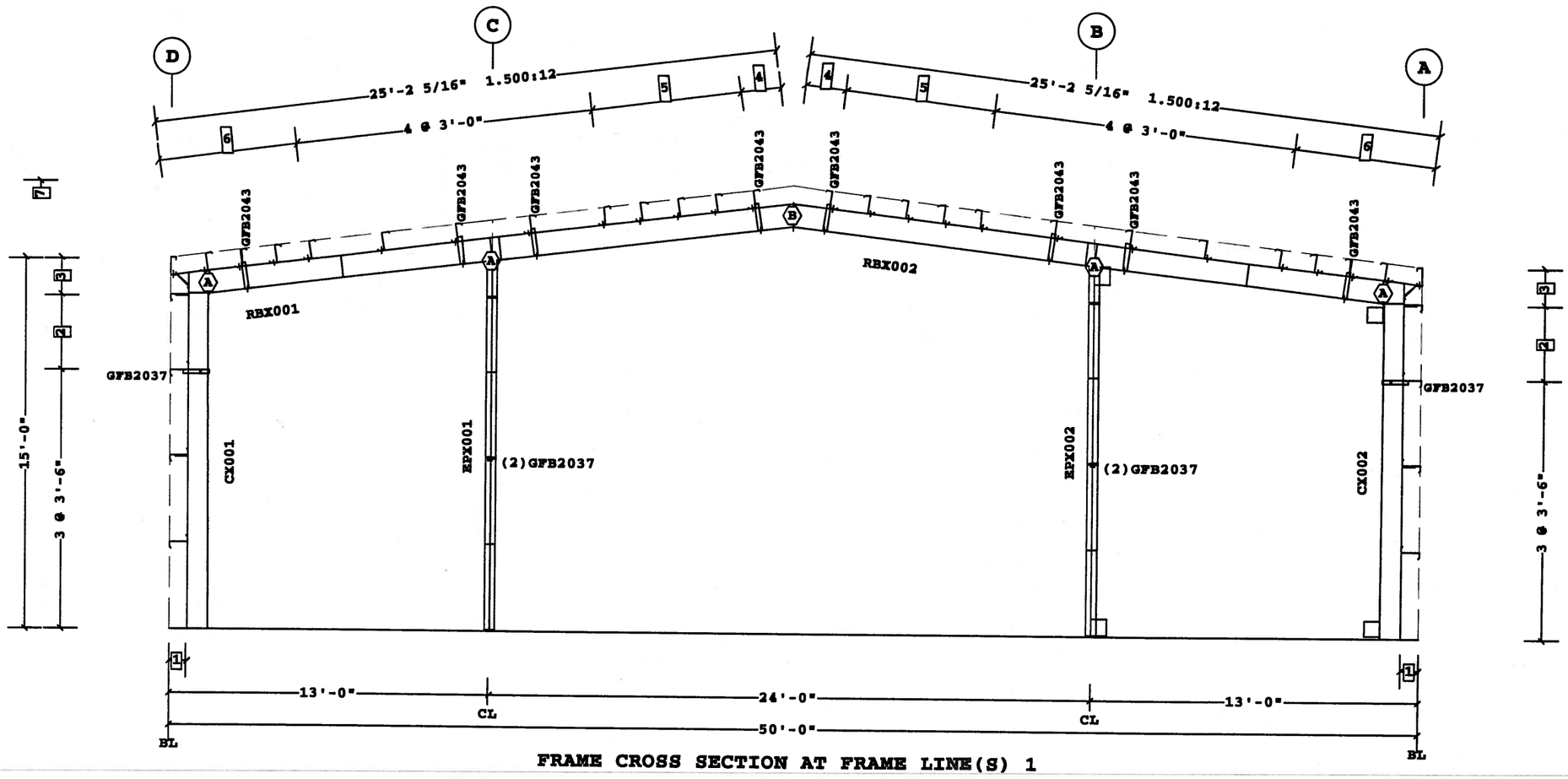

FRAME CROSS SECTION AT FRAME LINE(S) 1

LARRY L. BOOZER LICENSE No. 44236 STATE OF FLORIDA PROFESSIONAL ENGINEER

Larry L. Boozer, P.E. No. 44236
VP Buildings, Inc.
7031 Albert Pick Rd., Suite 200
Greensboro, NC 27409

PERMIT SET- For Building Dept. Approval

Shape Name = Dry Stge Building Wall 4, Frame 1

1. USE 1/2 X 1 1/2 A325 SNUG TIGHTENED BOLTS FOR ALL SECONDARY CONNECTIONS, SECONDARY CLIP CONNECTIONS, AND FLANGE BRACE CONNECTIONS, UNLESS NOTED OTHERWISE.
2. SLOT REINFORCEMENT PLATES NEED NOT BE LOCATED ON THE SAME SIDE OF THE WEB AS THE HILLSIDE WASHER.

THE VP ENGINEER'S SEAL APPLIES ONLY TO THE WORK PRODUCT OF VP AND DESIGN AND PERFORMANCE REQUIREMENTS SPECIFIED BY VP. THE VP ENGINEER'S SEAL DOES NOT APPLY TO THE PERFORMANCE OR DESIGN OF ANY OTHER PRODUCT OR COMPONENT FURNISHED BY VP EXCEPT TO ANY DESIGN OR PERFORMANCE REQUIREMENTS SPECIFIED BY VP.

THIS DRAWING, INCLUDING THE INFORMATION HEREON, REMAINS THE PROPERTY OF VP BUILDINGS. IT IS PROVIDED SOLELY FOR ERECTING THE BUILDING DESCRIBED IN THE APPLICABLE PURCHASE ORDER AND SHALL NOT BE MODIFIED, REPRODUCED OR USED FOR ANY OTHER PURPOSE WITHOUT PRIOR WRITTEN APPROVAL OF VP BUILDINGS.

THE GENERAL CONTRACTOR AND/OR ERECTOR IS SOLELY RESPONSIBLE FOR ACCURATE GOOD QUALITY WORKMANSHIP IN ERECTING THIS BUILDING IN ACCORDANCE WITH THIS DRAWING, DETAILS REFERENCED IN THIS DRAWING, ALL APPLICABLE VP BUILDINGS ERECTION GUIDES, AND INDUSTRY STANDARDS PERTAINING TO PROPER ERECTION, INCLUDING THE CORRECT USE OF TEMPORARY BRACING.

VP Buildings
3200 Players Club Circle Memphis TN 38125

REV	DATE	BY	DESCRIPTION

NTS

11/1/2012 12:13:11

FRAME CROSS SECTION AT FRAME LINE(S) 1

BUILDER	Lemartec Eng. & Const. Corp.
CUSTOMER	Florida Power and Light
LOCATION	Homestead, Florida
PROJECT	FPL-Dry Storage Building
BUILDER'S PO#	2706-12158
FILENAME	2706-12158-FPL-Dry Storage Building copy 2 from TW

VP BUILDINGS VARCO PRUDEN

VPC VERSION: 2012.3

JOB #	12-23530
DATE	11/7/2012
DRAWN/CHECK	VPC / JLB
PAGE	

Division of Blue Ridge Buildings North America, Inc.

Dimension Key

1	8 1/2"
2	3'-0"
3	1'-6"
4	0"
5	1'-7 1/16"
6	2 @ 2'-9 5/8"
7	0'-0"
8	18'-1 1/2" Ridge Ht.

Frame Member Schedule

Part	Mem	Width	Thick	WebThk.	Depth1	Depth2	Approx.Lgth	Approx.Weight
CX003	1	5.0000	.3125	.1875	1'-0"	2'-10"	14'-8 3/16"	516#
RBX003	2	5.0000	.2500	.2500	2'-6"	10"	21'-11 3/16"	533#
	3	5.0000	.3125	.1345	10"	2'-2"		
RBX004	4	5.0000	.3125	.1345	2'-2"	10"	21'-11 3/16"	533#
	5	5.0000	.2500	.2500	10"	2'-6"		
CX004	6	5.0000	.3125	.1875	1'-0"	2'-10"	14'-8 3/16"	517#

Frame Clearances

Horiz. Clearance between members 1(CX003) and 6(CX004): 42'-10 5/16"
Vert. Clearance at member 1(CX003): 11'-11 13/16"
Vert. Clearance at member 6(CX004): 11'-11 13/16"
Finished Floor Elevation = 100'-0" (Unless Noted Otherwise)

Bolt Connection & Plate Schedule

Id	Qty	Grade	Bolt Dia.	Bolt Length	Plate Thick.	Rows Out	Rows In	PartNo
A	8	A325	3/4"	2 1/2"	1/2"	2	2	0097284
B	6	A325	3/4"	2 1/2"	1/2"	1	2	0097284

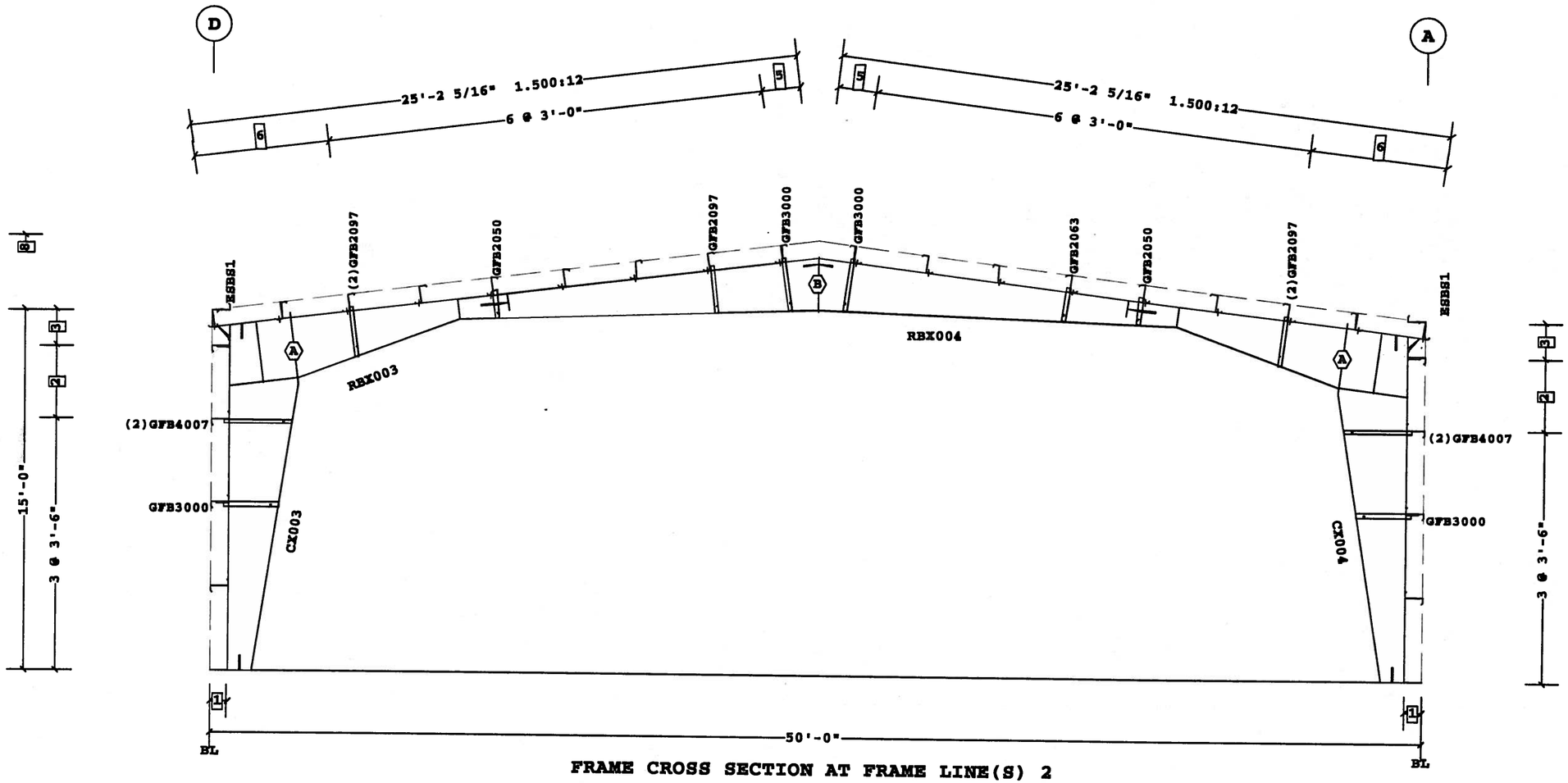

FRAME CROSS SECTION AT FRAME LINE(S) 2

LARRY L. BOOZER LICENSE No. 44236 STATE OF FLORIDA PROFESSIONAL ENGINEER

11/13/12

Larry L. Boozer, P.E. No. 44236
VP Buildings, Inc.
7031 Albert Pick Rd., Suite 200
Greensboro, NC 27409

Shape Name = Dry Stge Building Wall 4, Frame 2

PERMIT SET- For Building Dept. Approval

1. USE 1/2 X 1 1/2 A325 SNUG TIGHTENED BOLTS FOR ALL SECONDARY CONNECTIONS, SECONDARY CLIP CONNECTIONS, AND FLANGE BRACE CONNECTIONS, UNLESS NOTED OTHERWISE.
2. SLOT REINFORCEMENT PLATES NEED NOT BE LOCATED ON THE SAME SIDE OF THE WEB AS THE HILLSIDE WASHER.

THE VP ENGINEER'S SEAL APPLIES ONLY TO THE WORK PRODUCT OF VP AND DESIGN AND PERFORMANCE REQUIREMENTS SPECIFIED BY VP. THE VP ENGINEER'S SEAL DOES NOT APPLY TO THE PERFORMANCE OR DESIGN OF ANY OTHER PRODUCT OR COMPONENT FURNISHED BY VP EXCEPT TO ANY DESIGN OR PERFORMANCE REQUIREMENTS SPECIFIED BY VP.

THIS DRAWING, INCLUDING THE INFORMATION HEREON, REMAINS THE PROPERTY OF VP BUILDINGS. IT IS PROVIDED SOLELY FOR ERECTING THE BUILDING DESCRIBED IN THE APPLICABLE PURCHASE ORDER AND SHALL NOT BE MODIFIED, REPRODUCED OR USED FOR ANY OTHER PURPOSE WITHOUT PRIOR WRITTEN APPROVAL OF VP BUILDINGS.

THE GENERAL CONTRACTOR AND/OR ERECTOR IS SOLELY RESPONSIBLE FOR ACCURATE GOOD QUALITY WORKMANSHIP IN ERECTING THIS BUILDING IN ACCORDANCE WITH THIS DRAWING, DETAILS REFERENCED IN THIS DRAWING, ALL APPLICABLE VP BUILDINGS ERECTION GUIDES, AND INDUSTRY STANDARDS PERTAINING TO PROPER ERECTION, INCLUDING THE CORRECT USE OF TEMPORARY BRACING.

VP Buildings
3200 Players Club Circle Memphis TN 38125

REV	DATE	BY	DESCRIPTION

NTS

11/1/2012 12:13:12

FRAME CROSS SECTION AT FRAME LINE(S) 2

BUILDER	Lemartec Eng. & Const. Corp.
CUSTOMER	Florida Power and Light
LOCATION	Homestead, Florida
PROJECT	FPL-Dry Storage Building
BUILDER'S PO#	2706-12158
FILENAME:	2706-12158-FPL-Dry Storage Building copy 2 from TW

VP BUILDINGS VARCO PRUDEN

VPC VERSION: 2012.3

JOB #	12-23530
DATE	11/7/2012
DRAWN/CHECK	VPC / JLB
PAGE	

© Varco-Pruden Buildings North America, Inc.

Dimension Key

1	8 1/2"
2	3'-0"
3	1'-6"
4	1'-7 1/16"
5	2 @ 2'-9 5/8"
6	0'-0"
7	0"
8	18'-1 1/2" Ridge Ht.

Frame Member Schedule

Part	Mem	Width	Thick	WebThk.	Depth1	Depth2	Approx.Lgth	Approx.Weight
CX005	1	5.0000	.3125	.1875	1'-0"	2'-10"	14'-8 3/16"	516#
RBX005	2	5.0000	.2500	.2500	2'-6"	10"	21'-11 3/16"	533#
	3	5.0000	.3125	.1345	10"	2'-2"		
RBX006	4	5.0000	.3125	.1345	2'-2"	10"	21'-11 3/16"	533#
	5	5.0000	.2500	.2500	10"	2'-6"		
CX006	6	5.0000	.3125	.1875	1'-0"	2'-10"	14'-8 3/16"	517#

Frame Clearances

Horiz. Clearance between members 1(CX005) and 6(CX006): 42'-10 5/16"
Vert. Clearance at member 1(CX005): 11'-11 13/16"
Vert. Clearance at member 6(CX006): 11'-11 13/16"
Finished Floor Elevation = 100'-0" (Unless Noted Otherwise)

Bolt Connection & Plate Schedule

Id	Qty	Grade	Bolt Dia.	Bolt Length	Plate Thick.	Rows Out	Rows In	PartNo
A	8	A325	3/4"	2 1/2"	1/2"	2	2	0097284
B	6	A325	3/4"	2 1/2"	1/2"	1	2	0097284

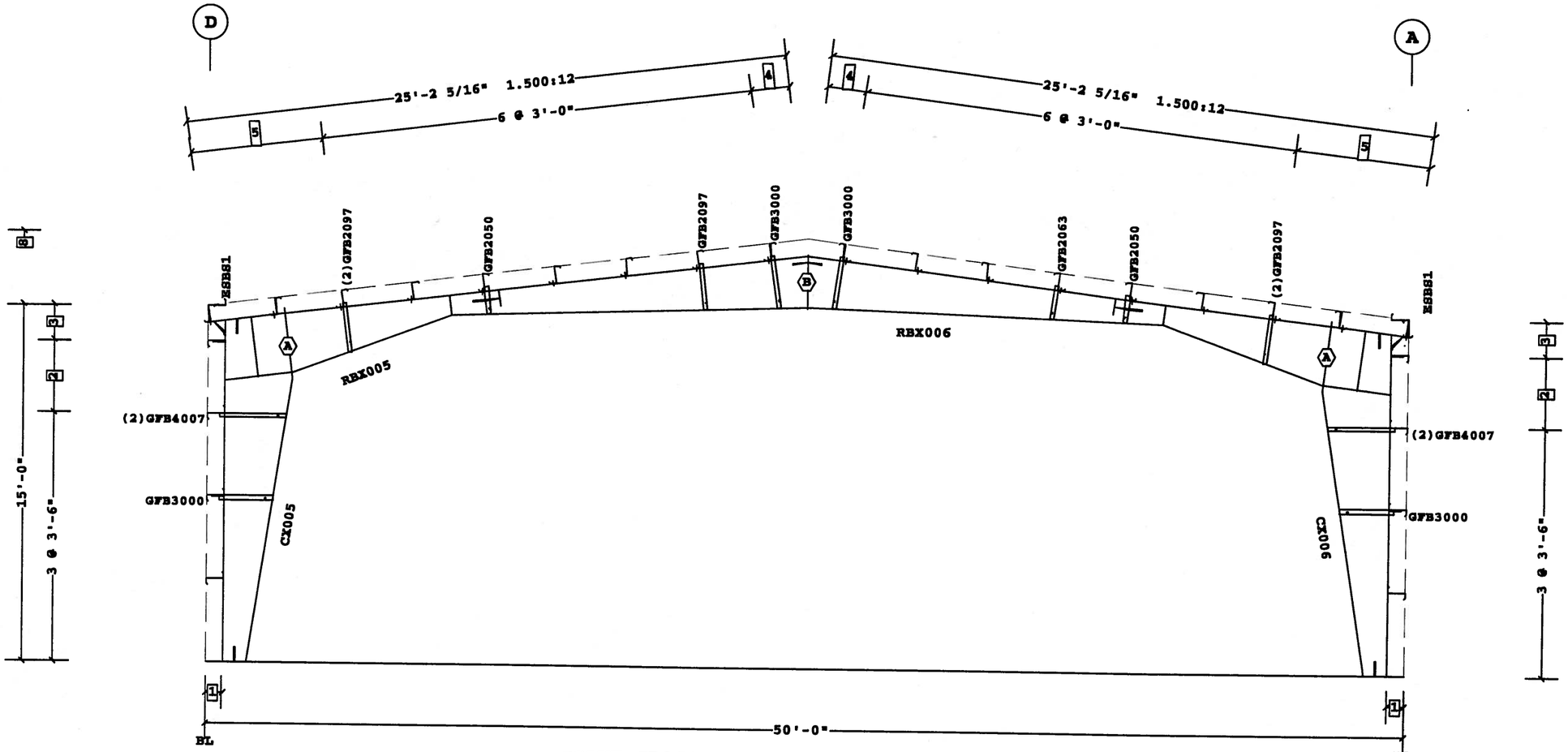

FRAME CROSS SECTION AT FRAME LINE(S) 3

LARRY L. BOOZER LICENSE No. 44236 STATE OF FLORIDA PROFESSIONAL ENGINEER

11/13/12

Larry L. Boozer, P.E. No. 44236
VP Buildings, Inc.
7031 Albert Pick Rd., Suite 200
Greensboro, NC 27409

1. USE 1/2 X 1 1/2 A325 SNUG TIGHTENED BOLTS FOR ALL SECONDARY CONNECTIONS, SECONDARY CLIP CONNECTIONS, AND FLANGE BRACE CONNECTIONS, UNLESS NOTED OTHERWISE.
2. SLOT REINFORCEMENT PLATES NEED NOT BE LOCATED ON THE SAME SIDE OF THE WEB AS THE HILLSIDE WASHER.

THE VP ENGINEER'S SEAL APPLIES ONLY TO THE WORK PRODUCT OF VP AND DESIGN AND PERFORMANCE REQUIREMENTS SPECIFIED BY VP. THE VP ENGINEER'S SEAL DOES NOT APPLY TO THE PERFORMANCE OR DESIGN OF ANY OTHER PRODUCT OR COMPONENT FURNISHED BY VP EXCEPT TO ANY DESIGN OR PERFORMANCE REQUIREMENTS SPECIFIED BY VP.

Shape Name = Dry Stge Building Wall 4, Frame 3

THIS DRAWING, INCLUDING THE INFORMATION HEREON, REMAINS THE PROPERTY OF VP BUILDINGS. IT IS PROVIDED SOLELY FOR ERECTING THE BUILDING DESCRIBED IN THE APPLICABLE PURCHASE ORDER AND SHALL NOT BE MODIFIED, REPRODUCED OR USED FOR ANY OTHER PURPOSE WITHOUT PRIOR WRITTEN APPROVAL OF VP BUILDINGS.

THE GENERAL CONTRACTOR AND/OR ERECTOR IS SOLELY RESPONSIBLE FOR ACCURATE GOOD QUALITY WORKMANSHIP IN ERECTING THIS BUILDING IN ACCORDANCE WITH THIS DRAWING, DETAILS REFERENCED IN THIS DRAWING, ALL APPLICABLE VP BUILDINGS ERECTION GUIDES, AND INDUSTRY STANDARDS PERTAINING TO PROPER ERECTION, INCLUDING THE CORRECT USE OF TEMPORARY BRACING.

VP Buildings
3200 Players Club Circle Memphis TN 38125

REV	DATE	BY	DESCRIPTION

NTS

11/1/2012 12:13:14

PERMIT SET- For Building Dept. Approval

FRAME CROSS SECTION AT FRAME LINE(S) 3

BUILDER	Lemartec Eng. & Const. Corp.
CUSTOMER	Florida Power and Light
LOCATION	Homestead, Florida
PROJECT	FPL-Dry Storage Building
BUILDER'S PO#	2706-12158
VPC VERSION:	2012.3
FILENAME:	2706-12158-FPL-Dry Storage Building copy 2 from TW
JOB #	12-23530
DATE	11/7/2012
DRAWN/CHECK	VPC / JLB
PAGE	

VP BUILDINGS VARCO PRUDEN

A Division of BlueScope Buildings North America, Inc.

Dimension Key

1	8 1/2"
2	3'-0"
3	1'-6"
4	1'-7 1/16"
5	4 @ 1'-6"
6	4 @ 1'-4 13/16"
7	18'-1 1/2" Ridge Ht.

Frame Member Schedule

Part	Width	Thick	WebThk.	Depth1	Depth2	Approx.Lgth	Approx.Weight	Detail
CX007	5.0000	.1345	.1345	10"	10"	14'-5 11/16"	170#	
RBX001	5.0000	.1875	.1345	11"	11"	23'-7 11/16"	293#	
	5.0000	.1875	.1345	11"	11"			
	5.0000	.1875	.1345	11"	11"			
RBX002	5.0000	.1875	.1345	11"	11"	23'-9"	293#	
	5.0000	.1875	.1345	11"	11"			
	5.0000	.1875	.1345	11"	11"			
CX008	5.0000	.1345	.1345	10"	10"	14'-5 11/16"	159#	
EPX002	5.0000	.1875	.1345	9"	9"	15'-0 3/16"	128#	BR25CA
EPX001	5.0000	.1875	.1345	9"	9"	15'-0 3/16"	115#	BR25CA

Frame Clearances

Horiz. Clearance between members 1(CX007) and 8(CX008): 46'-11"
Vert. Clearance at member 1(CX007): 13'-6 3/16"
Vert. Clearance at member 8(CX008): 13'-6 3/16"
Vert. Clearance at member 9(EPX002): 14'-11 7/8"
Vert. Clearance at member 10(EPX001): 14'-11 7/8"
Finished Floor Elevation = 100'-0" (Unless Noted Otherwise)

Bolt Connection & Plate Schedule

Id	Qty	Grade	Bolt Dia.	Bolt Length	Plate Thick.	Rows Out	Rows In	PartNo
A	4	A325	1/2"	1 1/2"	3/8"	1	1	49080
B	6	A325	1/2"	1 1/2"	3/8"	1	2	49080

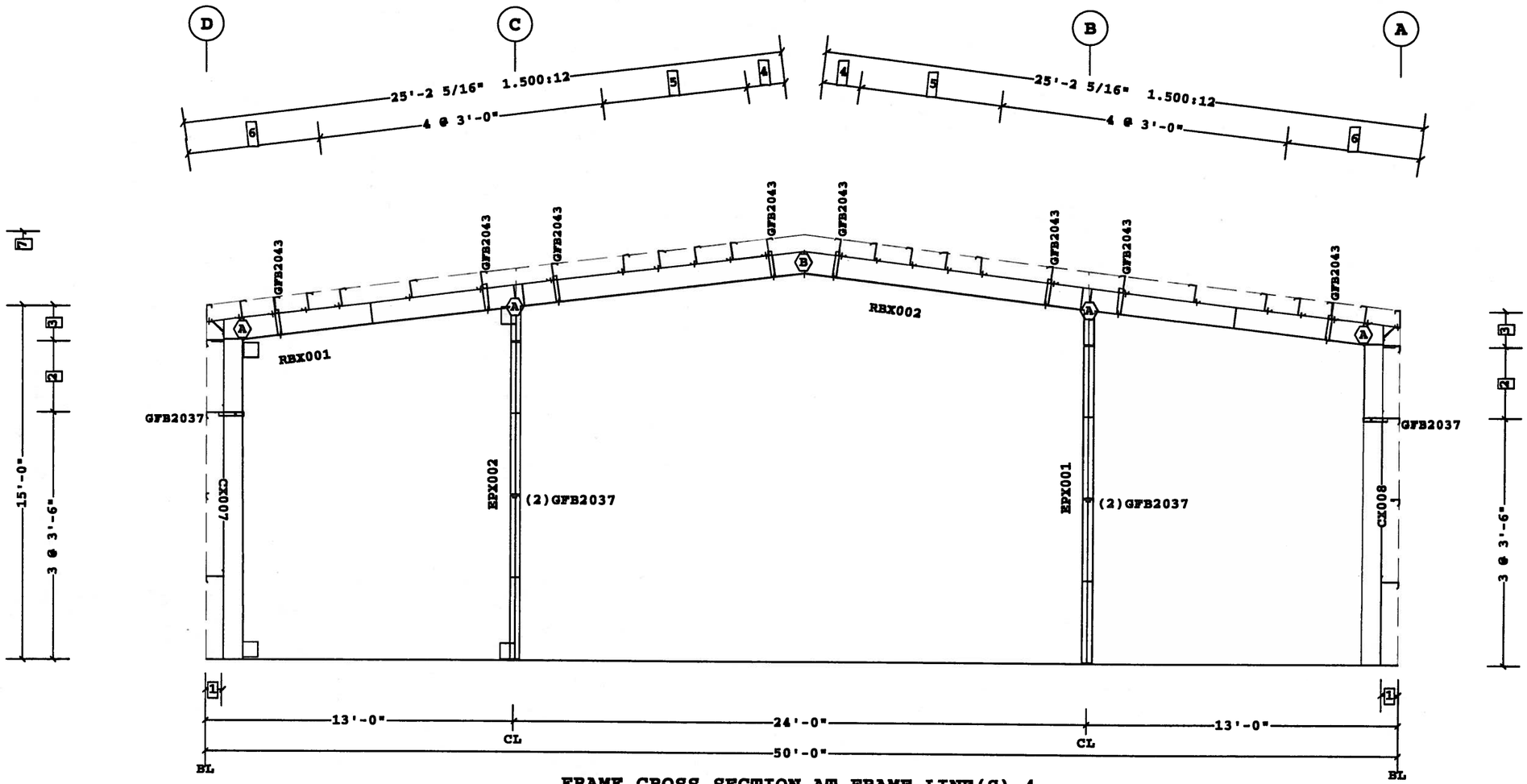

FRAME CROSS SECTION AT FRAME LINE(S) 4

LARRY L. BOOZER LICENSE No. 44236 STATE OF FLORIDA PROFESSIONAL ENGINEER

Larry L. Boozer, P.E. No. 44236
VP Buildings, Inc.
7031 Albert Pick Rd., Suite 200
Greensboro, NC 27409

PERMIT SET- For Building Dept. Approval

Shape Name = Dry Stge Building Wall 4, Frame 4

1. USE 1/2 X 1 1/2 A325 SNUG TIGHTENED BOLTS FOR ALL SECONDARY CONNECTIONS, SECONDARY CLIP CONNECTIONS, AND FLANGE BRACE CONNECTIONS, UNLESS NOTED OTHERWISE.
2. SLOT REINFORCEMENT PLATES NEED NOT BE LOCATED ON THE SAME SIDE OF THE WEB AS THE HILLSIDE WASHER.

THE VP ENGINEER'S SEAL APPLIES ONLY TO THE WORK PRODUCT OF VP AND DESIGN AND PERFORMANCE REQUIREMENTS SPECIFIED BY VP. THE VP ENGINEER'S SEAL DOES NOT APPLY TO THE PERFORMANCE OR DESIGN OF ANY OTHER PRODUCT OR COMPONENT FURNISHED BY VP EXCEPT TO ANY DESIGN OR PERFORMANCE REQUIREMENTS SPECIFIED BY VP.

THIS DRAWING, INCLUDING THE INFORMATION HEREON, REMAINS THE PROPERTY OF VP BUILDINGS. IT IS PROVIDED SOLELY FOR ERECTING THE BUILDING DESCRIBED IN THE APPLICABLE PURCHASE ORDER AND SHALL NOT BE MODIFIED, REPRODUCED OR USED FOR ANY OTHER PURPOSE WITHOUT PRIOR WRITTEN APPROVAL OF VP BUILDINGS.

THE GENERAL CONTRACTOR AND/OR ERECTOR IS SOLELY RESPONSIBLE FOR ACCURATE GOOD QUALITY WORKMANSHIP IN ERECTING THIS BUILDING IN ACCORDANCE WITH THIS DRAWING, DETAILS REFERENCED IN THIS DRAWING, ALL APPLICABLE VP BUILDINGS ERECTION GUIDES, AND INDUSTRY STANDARDS PERTAINING TO PROPER ERECTION, INCLUDING THE CORRECT USE OF TEMPORARY BRACING.

VP Buildings
3200 Players Club Circle Memphis TN 38125

REV	DATE	BY	DESCRIPTION

NTS

11/1/2012 12:13:15

FRAME CROSS SECTION AT FRAME LINE(S) 4

BUILDER	Lemartec Eng. & Const. Corp.
CUSTOMER	Florida Power and Light
LOCATION	Homestead, Florida
PROJECT	FPL-Dry Storage Building
BUILDER'S PO#	2706-12158
FILENAME	2706-12158-FPL-Dry Storage Building copy 2 from rvw

VP BUILDINGS VARCO PRUDEN

VPC VERSION: 2012.3

JOB #	12-23530
DATE	11/7/2012
DRAWN/CHECK	VPC / JLB
PAGE	

A Division of Berkshire Buildings North America, Inc.

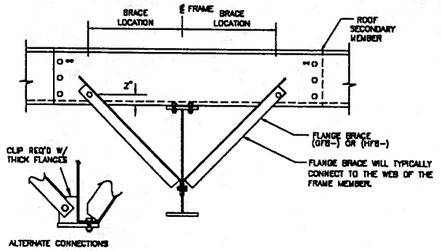

FLANGE BRACE REQUIREMENTS:

RULE#1– ALL FLANGE BRACES ON CROSS SECTIONS MUST BE INSTALLED.
RULE#2– SINGLE FLANGE BRACES ARE REQUIRED WHEN PART MARK ON CROSS SECTION IS NOT ACCOMPANIED BY (2).
RULE#3– FLANGE BRACES ARE REQUIRED BOTH SIDES OF THE FRAME WEB WHEN PART MARK IS ACCOMPANIED BY (2).
RULE#4– WHENEVER POSSIBLE, PLACE SINGLE BRACES TOWARD THE CENTER OF THE BUILDING.
RULE#5– WHENEVER POSSIBLE, PLACE ALL SINGLE BRACES ON THE SAME SIDE OF THE FRAME WEB.

↔ 10" & 11 1/2" PURLINS REQUIRE 3 BOLTS AT EACH END OF PURLIN LAP.

REV. DATE:07/01/09 | REV. NO. 00
BR06AE — TYPICAL FLANGE BRACE CONNECTIONS
CONT. PURLIN LAP SHOWN, CONT. GIRT & SIMPLE PURLIN

NOTE: ALL FIELD WELDING SHALL BE DONE IN COMPLIANCE WITH AWS PROCEDURES BY WELDERS QUALIFIED TO PERFORM THE WELD AS DIRECTED BY THE ASSOCIATED WELDING PROCEDURE SPECIFICATION (WPS). A WPS SHALL BE PREPARED BY THE CONTRACTOR FOR EACH WELDING VARIATION SPECIFIED, AS REQUIRED BY CODE. USE E70XX ELECTRODES. THE CONTRACTOR SHALL PROVIDE FOR ANY CODE SPECIFIED SPECIAL INSPECTIONS.

NOTE: IF THE MINIMUM WELD LENGTH CANNOT BE ACHIEVED, CONTACT YOUR MANUFACTURER FOR EVALUATION.

NOTE: "TOTAL MINIMUM WELD LENGTH" IS THE WELD LENGTH ON EACH SIDE OF THE ANGLE

ANGLE SIZE	W1 MINIMUM WELD SIZE REQUIRED	W2 MINIMUM WELD SIZE REQUIRED	TOTAL MINIMUM LENGTH REQUIRED
2" X 2" X 3/16"	3/16"	5/16"	4"
2" X 2" X 1/4"	3/16"	5/16"	5"
3" X 3" X 3/16"	3/16"	5/16"	6"
3" X 3" X 1/4"	3/16"	5/16"	7 1/2"
3" X 3" X 5/16"	1/4"	5/16"	8"
4" X 4" X 1/4"	3/16"	5/16"	10"
3" X 3" X 3/8"	5/16"	5/16"	8 1/2"
4" X 4" X 5/16"	1/4"	5/16"	11"
4" X 4" X 3/8"	5/16"	5/16"	11 1/2"
4" X 4" X 1/2"	5/16"	5/16"	15"
6" X 4" X 1/2"	5/16"	5/16"	19"
6" X 4" X 5/8"	5/16"	5/16"	23 1/2"

REV. DATE:07/01/09 | REV. NO. 00
BR23L2 — ANGLE BRACING
WELD SIZE – HIGH SEISMIC

NOTE: ALL FIELD WELDING SHALL BE DONE IN COMPLIANCE WITH AWS PROCEDURES BY WELDERS QUALIFIED TO PERFORM THE WELD AS DIRECTED BY THE ASSOCIATED WELDING PROCEDURE SPECIFICATION (WPS). A WPS SHALL BE PREPARED BY THE CONTRACTOR FOR EACH WELDING VARIATION SPECIFIED, AS REQUIRED BY CODE. USE E70XX ELECTRODES. THE CONTRACTOR SHALL PROVIDE FOR ANY CODE SPECIFIED SPECIAL INSPECTIONS.

NOTE: IF THE MINIMUM WELD LENGTH CANNOT BE ACHIEVED, CONTACT YOUR MANUFACTURER FOR EVALUATION.

NOTE: "TOTAL MINIMUM WELD LENGTH" IS THE WELD LENGTH ON EACH SIDE OF THE ANGLE

ANGLE SIZE	W1 MINIMUM WELD SIZE REQUIRED	W2 MINIMUM WELD SIZE REQUIRED	TOTAL MINIMUM LENGTH REQUIRED
2" X 2" X 3/16"	3/16"	3/16"	4"
2" X 2" X 1/4"	3/16"	5/16"	4"
3" X 3" X 3/16"	3/16"	3/16"	6"
3" X 3" X 1/4"	3/16"	5/16"	6"
3" X 3" X 5/16"	1/4"	5/16"	6 1/2"
4" X 4" X 1/4"	3/16"	5/16"	8"
3" X 3" X 3/8"	5/16"	5/16"	7"
4" X 4" X 5/16"	1/4"	5/16"	8 1/2"
4" X 4" X 3/8"	5/16"	5/16"	9"
4" X 4" X 1/2"	5/16"	5/16"	12"
6" X 4" X 1/2"	5/16"	5/16"	15 1/2"
6" X 4" X 5/8"	5/16"	5/16"	19"

REV. DATE:07/01/09 | REV. NO. 00
BR23L3 — ANGLE BRACING
WELD SIZE – LOW SEISMIC

FOR UNEQUAL LEG ANGLES, THE LONGER LEG IS WELDED TO THE GUSSET

SEE ERECTION DRAWINGS FOR LOCATION AND MARK NO'S.

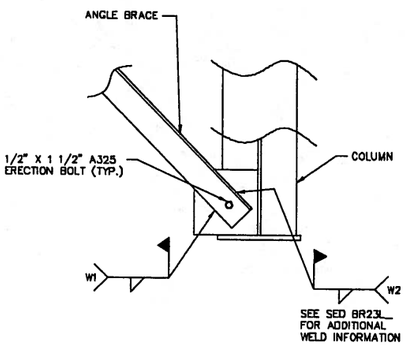

REV. DATE:08/03/12 | REV. NO. 01
BR23M1 — ANGLE BRACING
WALL BASE OFF WEB

FOR UNEQUAL LEG ANGLES, THE LONGER LEG IS WELDED TO THE GUSSET

SEE ERECTION DRAWINGS FOR LOCATION AND MARK NO'S.

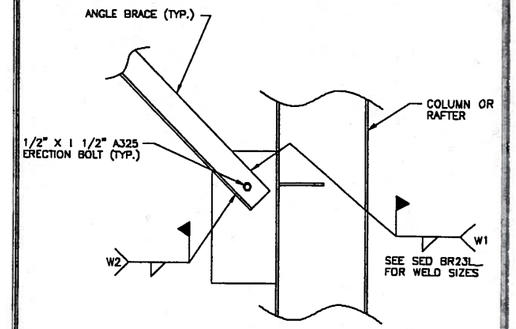

REV. DATE:07/01/09 | REV. NO. 00
BR23N1 — ANGLE BRACING
COLUMN OR RAFTER FLANGE

FOR UNEQUAL LEG ANGLES, THE LONGER LEG IS WELDED TO THE GUSSET

SEE ERECTION DRAWINGS FOR LOCATION AND MARK NO'S.

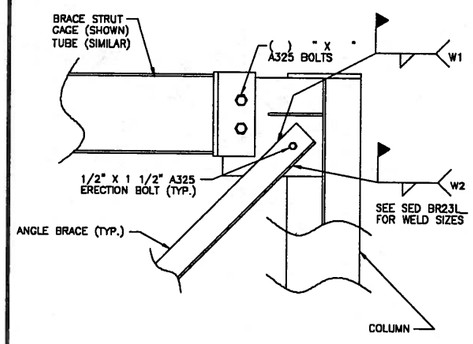

REV. DATE:07/01/09 | REV. NO. 00
BR23P1 — ANGLE BRACING WITH GAGE STRUT
WALL EAVE

FOR UNEQUAL LEG ANGLES, THE LONGER LEG IS WELDED TO THE GUSSET

SEE ERECTION DRAWINGS FOR LOCATION AND MARK NO'S.

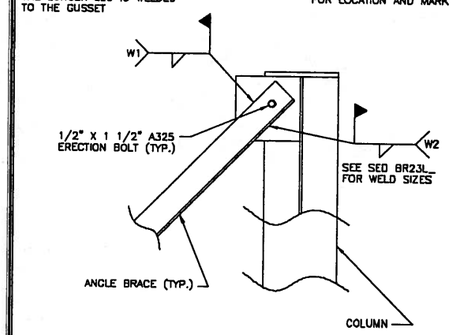

REV. DATE:07/01/09 | REV. NO. 00
BR23R1 — ANGLE BRACING
WALL EAVE W/O STRUT

FOR UNEQUAL LEG ANGLES, THE LONGER LEG IS WELDED TO THE GUSSET

SEE ERECTION DRAWINGS FOR LOCATION AND MARK NO'S.

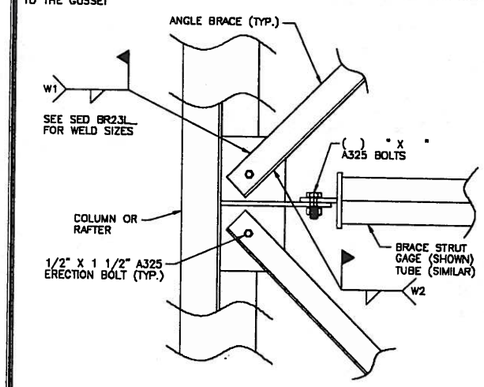

REV. DATE:07/01/09 | REV. NO. 00
BR23S1 — ANGLE BRACING WITH GAGE STRUT
ROOF OR WALL

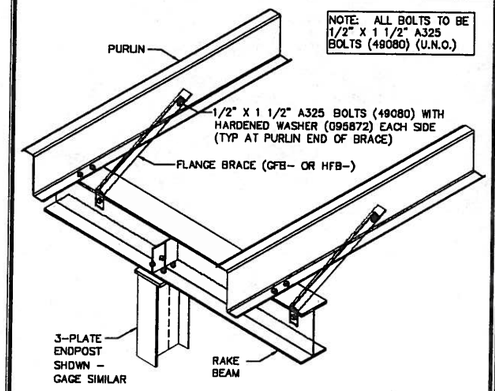

NOTE: ALL BOLTS TO BE 1/2" X 1 1/2" A325 BOLTS (49080) (U.N.O.)

REV. DATE:08/24/11 | REV. NO. 01
BR25CA — ENDPOST TOP BETWEEN PURLINS
NO CAP CHANNEL – BRACED TO PURLINS ONLY

NOTE: ALL FIELD WELDING SHALL BE DONE IN COMPLIANCE WITH AWS PROCEDURES BY WELDERS QUALIFIED TO PERFORM THE WELD AS DIRECTED BY THE ASSOCIATED WELDING PROCEDURE SPECIFICATION (WPS). A WPS SHALL BE PREPARED BY THE CONTRACTOR FOR EACH WELDING VARIATION SPECIFIED, AS REQUIRED BY CODE. USE E70XX ELECTRODES. THE CONTRACTOR SHALL PROVIDE FOR ANY CODE SPECIFIED SPECIAL INSPECTIONS.

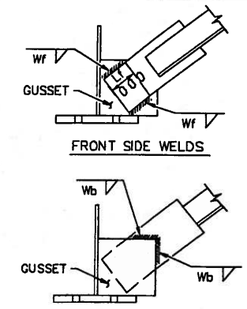

SEE SED BR33L2 FOR WELD SIZES AND LENGTHS IF REQUIRED

NOTE: CONTINGENCY WELDS ARE ALLOWED AS AN ALTERNATE TO BOLTING THE BRACE PADS TO THE GUSSET PLATES. IN CASES WHERE THE BRACES DON'T BOLT UP AND SHIMMING IS NOT DESIRED, IT IS RECOMMENDED TO BOLT THE HIGH END OF THE BRACE AND FIELD WELD THE LOW END.

REV. DATE:06/15/11 | REV. NO. 00
BR33L1 — BOLTED ANGLE BRACING
CONTINGENCY WELDS

CONTINGENCY WELDS (IF BOLTS NOT INSTALLED)

(PART NO) ANGLE SIZE	FRONT SIDE WELD SIZE REQUIRED (Wf)	FRONT SIDE WELD LENGTH PER SIDE	BACK SIDE WELD SIZE REQUIRED (Wb)
(06BAB_) 2" X 2" X 3/16"	3/16"	3"	5/16"
(09BAB_) 2" X 2" X 1/4"	1/4"	3"	5/16"
(12BAB_) 3" X 3" X 3/16"	3/16"	3"	5/16"
(13BAB_) 3" X 3" X 1/4"	1/4"	4"	5/16"
(14BAB_) 3" X 3" X 5/16"	5/16"	4"	5/16"
(16BAB_) 4" X 4" X 1/4"	5/16"	4.5"	5/16"
(15BAB_) 3" X 3' X 3/8"	5/16"	4"	5/16"
(17BAB_) 4" X 4" X 5/16"	5/16"	5"	5/16"
(18BAB_) 4" X 4" X 3/8"	5/16"	5"	7/16"
(19BAB_) 4" X 4" X 1/2"	9/16"	4"	9/16"

NOTES:

1. REFER TO DETAIL BR33L1 FOR ADDITIONAL INFORMATION.
2. IF THE MINIMUM WELD LENGTH CANNOT BE ACHIEVED, CONTACT YOUR MANUFACTURER FOR EVALUATION.

REV. DATE:11/07/11 | REV. NO. 01
BR33L2 — BOLTED ANGLE BRACING
CONTINGENCY WELDS – SIZES AND LENGTHS

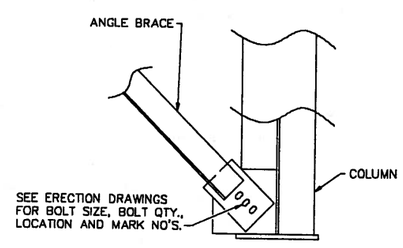

SEE SED BR33L1 AND BR33L2 FOR CONTINGENCY WELDS, IF BOLT HOLES DO NOT ALIGN.

SEE ERECTION GUIDE FOR BASE PLATE SHIMMING INFORMATION.

REV. DATE:04/11/11 | REV. NO. 00
BR33M1 — BOLTED ANGLE BRACING
AT BASE OF COLUMN

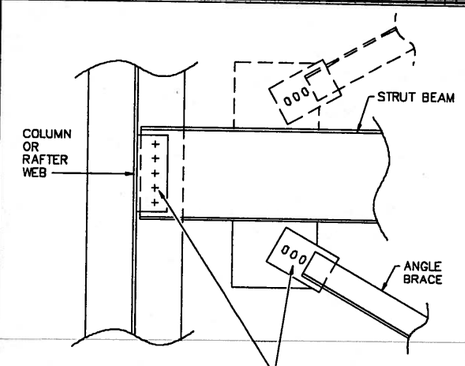

SEE SED BR33L1 AND BR33L2 FOR CONTINGENCY WELDS, IF BOLT HOLES DO NOT ALIGN.

REV. DATE:11/07/11 | REV. NO. 01
BR33N1 — BOLTED ANGLE BRACING
INTERMEDIATE STRUT BEAMS

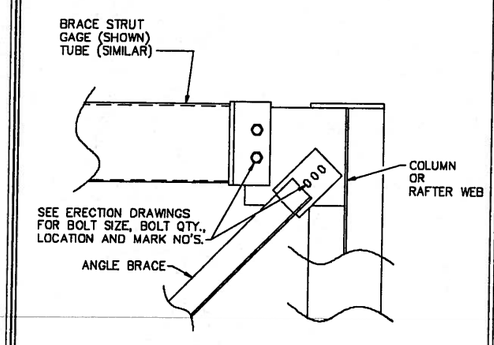

SEE SED BR33L1 AND BR33L2 FOR CONTINGENCY WELDS, IF BOLT HOLES DO NOT ALIGN.

REV. DATE:11/07/11 | REV. NO. 01
BR33P1 — BOLTED ANGLE BRACING
AT EAVE/HAUNCH

LARRY L. BOOZER LICENSE No. 44236 STATE OF FLORIDA PROFESSIONAL ENGINEER

11/13/12

Larry L. Boozer, P.E. No. 44236
VP Buildings, Inc.
7031 Albert Pick Rd., Suite 200
Greensboro, NC 27409

PERMIT SET- For Building Dept. Approval

1. USE 1/2 X 1 1/2 A325 SNUG TIGHTENED BOLTS FOR ALL SECONDARY CONNECTIONS, SECONDARY CLIP CONNECTIONS, AND FLANGE BRACE CONNECTIONS, UNLESS NOTED OTHERWISE.
2. SLOT REINFORCEMENT PLATES NEED NOT BE LOCATED ON THE SAME SIDE OF THE WEB AS THE HILLSIDE WASHER.

THE VP ENGINEER'S SEAL APPLIES ONLY TO THE WORK PRODUCT OF VP AND DESIGN AND PERFORMANCE REQUIREMENTS SPECIFIED BY VP. THE VP ENGINEER'S SEAL DOES NOT APPLY TO THE PERFORMANCE OR DESIGN OF ANY OTHER PRODUCT OR COMPONENT FURNISHED BY VP EXCEPT TO ANY DESIGN OR PERFORMANCE REQUIREMENTS SPECIFIED BY VP.

THIS DRAWING, INCLUDING THE INFORMATION HEREON, REMAINS THE PROPERTY OF VP BUILDINGS. IT IS PROVIDED SOLELY FOR ERECTING THE BUILDING DESCRIBED IN THE APPLICABLE PURCHASE ORDER AND SHALL NOT BE MODIFIED, REPRODUCED OR USED FOR ANY OTHER PURPOSE WITHOUT PRIOR WRITTEN APPROVAL OF VP BUILDINGS.

THE GENERAL CONTRACTOR AND/OR ERECTOR IS SOLELY RESPONSIBLE FOR ACCURATE GOOD QUALITY WORKMANSHIP IN ERECTING THIS BUILDING IN ACCORDANCE WITH THIS DRAWING, DETAILS REFERENCED IN THIS DRAWING, ALL APPLICABLE VP BUILDINGS ERECTION GUIDES, AND INDUSTRY STANDARDS PERTAINING TO PROPER ERECTION, INCLUDING THE CORRECT USE OF TEMPORARY BRACING.

VP Buildings
3200 Players Club Circle Memphis TN 38125

REV	DATE	BY	DESCRIPTION

NTS

11/1/2012 12:13:15

PRIMARY BRACING SEDS

BUILDER: Lemartec Eng. & Const. Corp.
CUSTOMER: Florida Power and Light
LOCATION: Homestead, Florida
PROJECT: FPL-Dry Storage Building
BUILDER'S PO#: 2706-12158
FILENAME: 2706-12158-FPL-Dry Storage Building copy 2 from TW

VP BUILDINGS VARCO PRUDEN
VPC VERSION: 2012.3
a division of Blue Ridge Buildings North America, Inc.

JOB # 12-23530
DATE 11/7/2012
DRAWN/CHECK VPC / JLB
PAGE

F = FEET G = GAGE
I = INCHES O = OPERATION
E = EIGHTHS C = FIN/COLOR

PANEL/COVERING
W 1 3 1 1 7 2 6 1 K T D
* F F I I E G G O C C C
LENGTH CODE

INSULATION
I B 1 3 0 1 0 3 6 D 3 0 W V
* * F F F I I I I I E C C
LENGTH WIDTH THK CODE

SECONDARY (STANDARD)
0 8 Z 1 9 1 1 4 1 7 - - - - -
* * * F F I I E G G + + + + +
DEPTH LENGTH SHAPE GAGE ADJUST.CODES

SECONDARY (SPECIAL)
0 0 1 0 8 Z 1 9 1 1 4 1 7 - - -
* * * * * * F F I I E G G * * *
COUNTER DEPTH& SHAPE LENGTH GAGE ADJUST.CODES

ROD BRACING
0 3 R S 2 5 1 0
I E * * F F I I
DIA LENGTH

RS = THREADS BOTH ENDS
RT = THREADS ONE END – CLEVIS ONE END
RU = CLEVIS BOTH ENDS
RP = THREAD BOTH ENDS – NO HILLSIDES

CX*** = COLUMN (PLATE)
CGX*** = COLUMN (GAGE)
WCX*** = COLUMN (HOTROLL)

RBX*** = RAFTER (PLATE)
BGX*** = RAFTER (GAGE)
WRX*** = RAFTER (HOTROLL)
TRX*** = TRUSS RAFTER

ICX*** = INTERIOR COLUMN
PCX*** = PIPE COLUMN
TCX*** = TUBE COLUMN

EPX*** = ENDPOST (PLATE)
EGX*** = ENDPOST (GAGE)

CBX*** = CANOPY (PLATE)
CBX*** = PIGGYBACK CANOPY

DCC*** = 8 1/2" GAGE POST
DCE*** = 10" GAGE POST

REV. DATE 08/29/12 | REV. NO. 01
EN50B1
MARK NUMBER KEY
COMMON GENERATED MARK NUMBERS

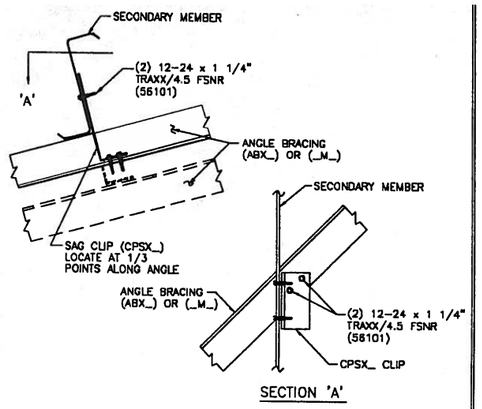

REV. DATE: 07/01/09 | REV. NO. 00
BR23T3
ANGLE BRACE SAG CLIP
DADE AND BROWARD COUNTY REQUIREMENTS

LARRY L. BOOZER
LICENSE
No. 44236
STATE OF FLORIDA
PROFESSIONAL ENGINEER

11/13/12

Larry L. Boozer, P.E. No. 44236
VP Buildings, Inc.
7031 Albert Pick Rd. | Suite 200
Greensboro, NC 27409

PERMIT SET- For Building Dept. Approval

1. USE 1/2 X 1 1/2 A325 SNUG TIGHTENED BOLTS FOR ALL SECONDARY CONNECTIONS, SECONDARY CLIP CONNECTIONS, AND FLANGE BRACE CONNECTIONS, UNLESS NOTED OTHERWISE.
2. SLOT REINFORCEMENT PLATES NEED NOT BE LOCATED ON THE SAME SIDE OF THE WEB AS THE HILLSIDE WASHER.

THE VP ENGINEER'S SEAL APPLIES ONLY TO THE WORK PRODUCT OF VP AND DESIGN AND PERFORMANCE REQUIREMENTS SPECIFIED BY VP. THE VP ENGINEER'S SEAL DOES NOT APPLY TO THE PERFORMANCE OR DESIGN OF ANY OTHER PRODUCT OR COMPONENT FURNISHED BY VP EXCEPT TO ANY DESIGN OR PERFORMANCE REQUIREMENTS SPECIFIED BY VP.

THIS DRAWING, INCLUDING THE INFORMATION HEREON, REMAINS THE PROPERTY OF VP BUILDINGS. IT IS PROVIDED SOLELY FOR ERECTING THE BUILDING DESCRIBED IN THE APPLICABLE PURCHASE ORDER AND SHALL NOT BE MODIFIED, REPRODUCED OR USED FOR ANY OTHER PURPOSE WITHOUT PRIOR WRITTEN APPROVAL OF VP BUILDINGS.

THE GENERAL CONTRACTOR AND/OR ERECTOR IS SOLELY RESPONSIBLE FOR ACCURATE GOOD QUALITY WORKMANSHIP IN ERECTING THIS BUILDING IN ACCORDANCE WITH THIS DRAWING, DETAILS REFERENCED IN THIS DRAWING, ALL APPLICABLE VP BUILDINGS ERECTION GUIDES, AND INDUSTRY STANDARDS PERTAINING TO PROPER ERECTION, INCLUDING THE CORRECT USE OF TEMPORARY BRACING.

VP Buildings
3200 Players Club Circle Memphis TN 38125

REV	DATE	BY	DESCRIPTION

NTS

11/1/2012 12:13:17

PRIMARY BRACING SEDS

BUILDER: Lemartec Eng. & Const. Corp.
CUSTOMER: Florida Power and Light
LOCATION: Homestead, Florida
PROJECT: FPL-Dry Storage Building
BUILDER'S PO#: 2706-12158
FILENAME: 2706-12158-FPL-Dry Storage Building copy 2 from FW

VP BUILDINGS
VARCO PRUDEN

VPC VERSION: 2012.3

JOB # 12-23530
DATE 11/7/2012
DRAWN/CHECK VPC / JLB
PAGE

Division of BlueScope Buildings North America, Inc.

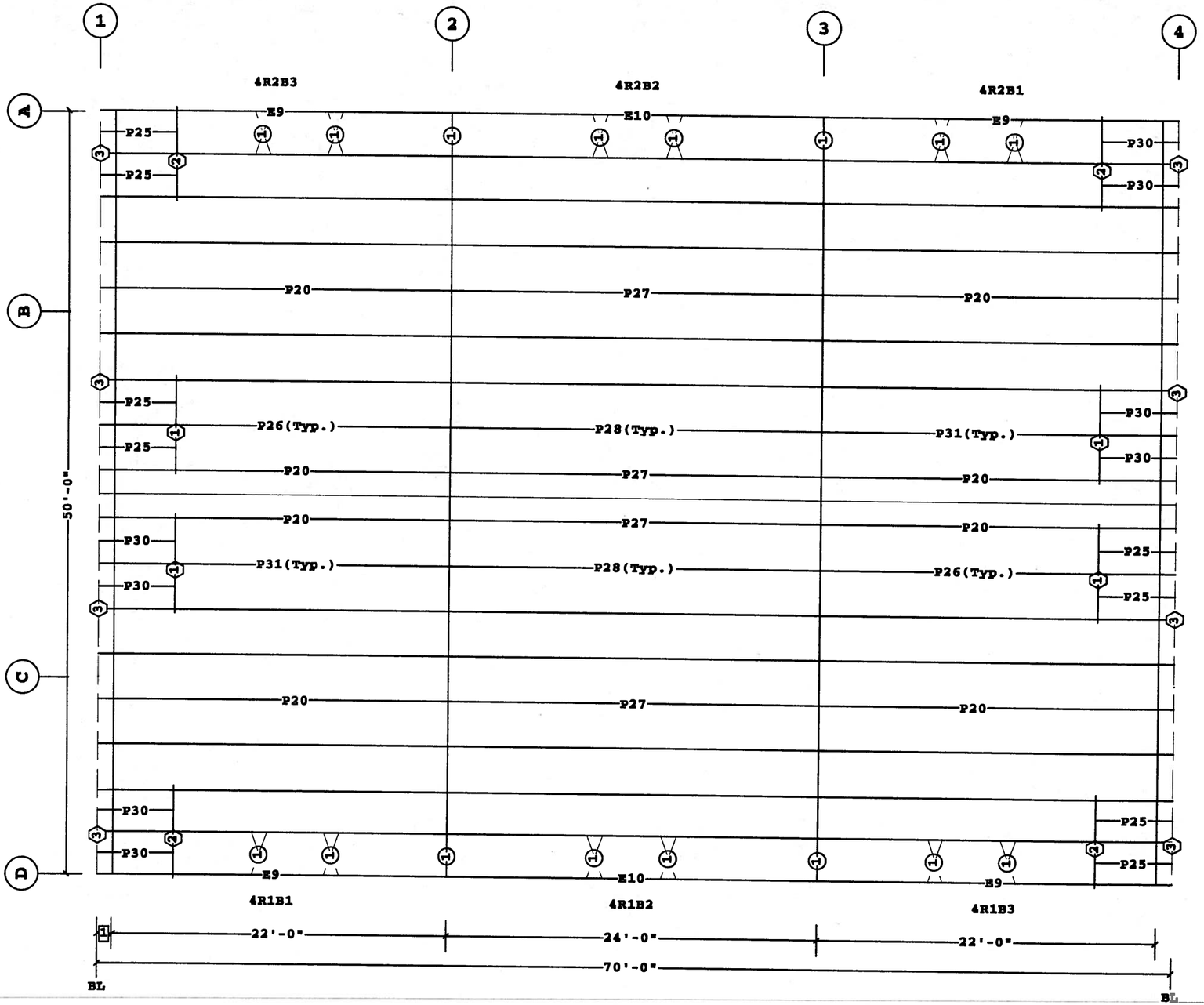

ROOF SECONDARY PLAN

1 1'-0"
Dimension Key

Secondary Part Schedule (8 1/2" members)

Mark	Part	Thick.	Lap	Detail
E10	08Z2311411DDB02	0.1130		RS12PA
E9	08Z2211411ADB02	0.1130		RS12PE,RS12PA
J51	00908JS0606017	0.0600		BR10D6,BR09HF
J52	01008JS0601217	0.0600		
P20	08Z2511411A4B0	0.1130	2'-10 1/2"	RS02T1,RS01T1
P25	00708ZS041141700	0.0600		
P26	08Z2511412A4B0	0.0980	2'-10 1/2"	RS02T1,RS11SB,RS01T1
P27	08Z29114154 4B0	0.0730	2'-10 1/2"	RS01T1
P28	08Z29114164 4B0	0.0680	2'-10 1/2"	RS01T1
P30	00608ZS041141700	0.0600		
P31	08Z2511413A4B0	0.0880	2'-10 1/2"	RS02T1,RS01T1

Purlin Brace Schedule

Id	Qty	Mark No	Spacing
1	28	PBA0301	2'-9 5/8"

See SED:
BR09K5, BR09JG, BR09RY, BR09RZ, BR09K2

Part Mark Key

1 J51(See BR09HF)
2 J52(See BR09HF)
3 RCHB15

LARRY L. BOOZER
LICENSE
No. 44236
STATE OF FLORIDA
PROFESSIONAL ENGINEER

11/13/12

Larry L. Boozer, P.E. No. 44236
VP Buildings, Inc.
7031 Albert Pick Rd., Suite 200
Greensboro, NC 27409

PERMIT SET- For Building Dept. Approval

1. UNLESS NOTED, USE 1/2 X 1 1/2 A-325 SNUG TIGHTENED BOLTS FOR ALL SECONDARY CONNECTIONS.
2. FLANGE BRACES ARE AN INTEGRAL PART OF THE STABILITY OF THE STRUCTURAL SYSTEM AND MUST BE PROPERLY INSTALLED PRIOR TO ERECTION OF WALL AND ROOF SHEETS.
3. REMOVAL OR ALTERATION OF ANY COMPONENT IS PROHIBITED.

THE VP ENGINEER'S SEAL APPLIES ONLY TO THE WORK PRODUCT OF VP AND DESIGN AND PERFORMANCE REQUIREMENTS SPECIFIED BY VP. THE VP ENGINEER'S SEAL DOES NOT APPLY TO THE PERFORMANCE OR DESIGN OF ANY OTHER PRODUCT OR COMPONENT FURNISHED BY VP EXCEPT TO ANY DESIGN OR PERFORMANCE REQUIREMENTS SPECIFIED BY VP.

Shape Name = Dry Stge Building

THIS DRAWING, INCLUDING THE INFORMATION HEREON, REMAINS THE PROPERTY OF VP BUILDINGS. IT IS PROVIDED SOLELY FOR ERECTING THE BUILDING DESCRIBED IN THE APPLICABLE PURCHASE ORDER AND SHALL NOT BE MODIFIED, REPRODUCED OR USED FOR ANY OTHER PURPOSE WITHOUT PRIOR WRITTEN APPROVAL OF VP BUILDINGS.

THE GENERAL CONTRACTOR AND/OR ERECTOR IS SOLELY RESPONSIBLE FOR ACCURATE GOOD QUALITY WORKMANSHIP IN ERECTING THIS BUILDING IN ACCORDANCE WITH THIS DRAWING, DETAILS REFERENCED IN THIS DRAWING, ALL APPLICABLE VP BUILDINGS ERECTION GUIDES, AND INDUSTRY STANDARDS PERTAINING TO PROPER ERECTION, INCLUDING THE CORRECT USE OF TEMPORARY BRACING.

VP Buildings
3200 Players Club Circle Memphis TN 38125

REV	DATE	BY	DESCRIPTION

NTS

11/1/2012 12:13:19

ROOF SECONDARY PLAN

BUILDER	Lemartec Eng. & Const. Corp.
CUSTOMER	Florida Power and Light
LOCATION	Homestead, Florida
PROJECT	FPL-Dry Storage Building
BUILDER'S PO#	2706-12158
VPC VERSION:	2012.3
FILENAME:	2706-12158-FPL-Dry Storage Building copy 2 from TW

VP BUILDINGS
VARCO PRUDEN

JOB # 12-23530
DATE 11/7/2012
DRAWN/CHECK VPC / JLB
PAGE

Subsidiary of BlueScope Buildings North America, Inc.

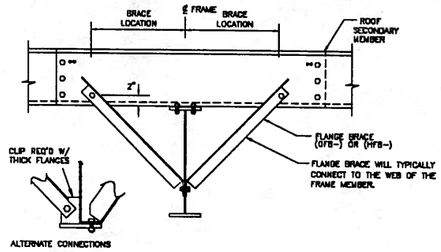

FLANGE BRACE REQUIREMENTS:

RULE#1– ALL FLANGE BRACES ON CROSS SECTIONS MUST BE INSTALLED.
RULE#2– SINGLE FLANGE BRACES ARE REQUIRED WHEN PART MARK ON CROSS SECTION IS NOT ACCOMPANIED BY (2).
RULE#3– FLANGE BRACES ARE REQUIRED BOTH SIDES OF THE FRAME WEB WHEN PART MARK IS ACCOMPANIED BY (2).
RULE#4– WHENEVER POSSIBLE, PLACE SINGLE BRACES TOWARD THE CENTER OF THE BUILDING.
RULE#5– WHENEVER POSSIBLE, PLACE ALL SINGLE BRACES ON THE SAME SIDE OF THE FRAME WEB.

↔ 10" & 11 1/2" PURLINS REQUIRE 3 BOLTS AT EACH END OF PURLIN LAP.

REV. DATE: 07/01/08 | REV. NO. 00 | BR06AE | TYPICAL FLANGE BRACE CONNECTIONS
CONT. PURLIN LAP SHOWN, CONT. GIRT & SIMPLE PURLIN

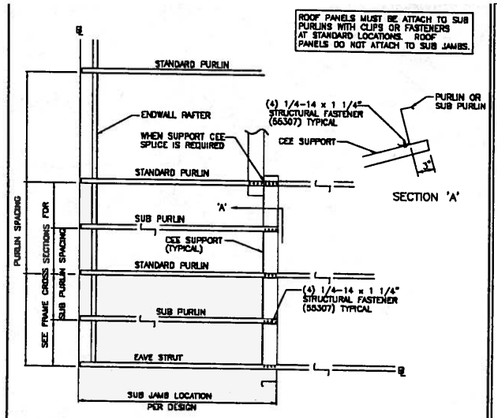

REV. DATE: 07/01/08 | REV. NO. 00 | BR09HF | CORNER ZONE BRACING
ROOF PLAN VIEW (CEE SUPPORT)

ERECTION NOTE:

WHEN A CHANNEL BRACE DOES NOT LINE UP WITH ANOTHER CHANNEL BRACE OR THE SLOTS IN THE PURLIN WEB FOR A DROP PIN CONNECTION BEND THE CHANNEL TABS TOWARD THE PURLIN WEB AND USE A SELF-DRILLER (55307) TO ATTACH.

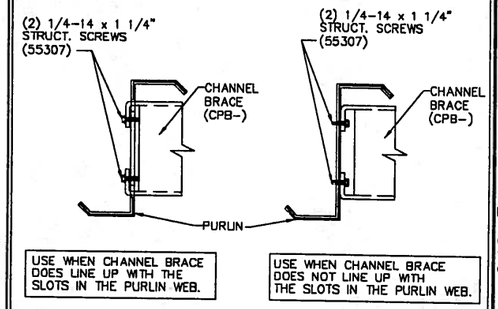

REV. DATE: 04/01/11 | REV. NO. 01 | BR09JG | CHANNEL BRACE ENDING AT PURLIN WEB
SELF-DRILLER WITH BENT TABS

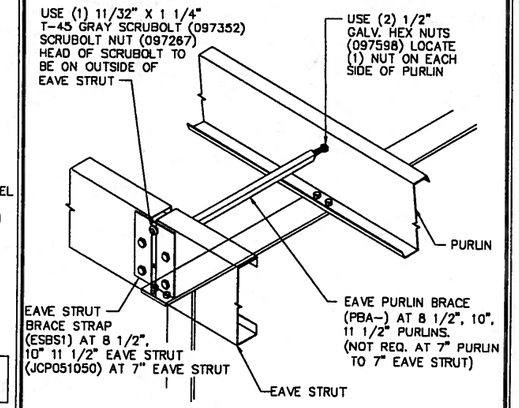

REV. DATE: 04/13/12 | REV. NO. 02 | BR09K2 | EAVE BRACE STRAP AND EAVE PURLIN BRACE
LOCATED AT EAVE – CENTERLINE OF FRAME

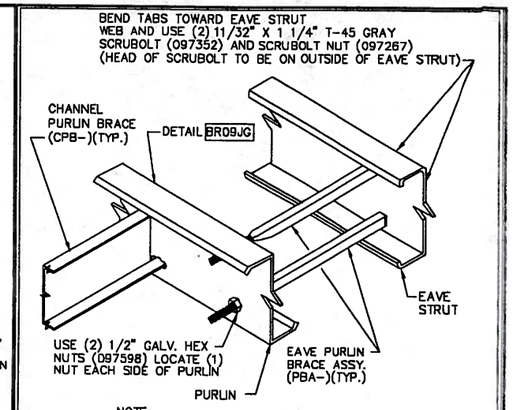

NOTE:
FOR LOW OR HIGH EAVE LOCATIONS.

REV. DATE: 08/28/12 | REV. NO. 02 | BR09K5 | EAVE STRUT BRACE BETWEEN FRAMES
WITH PURLIN TOP FLANGE AWAY FROM BUILDING LINE

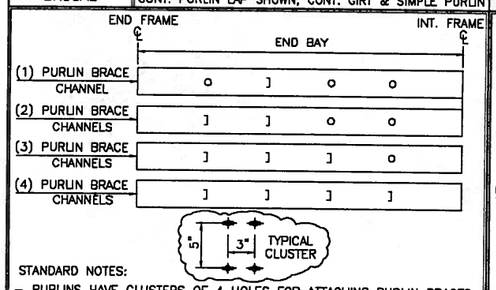

STANDARD NOTES:
- PURLINS HAVE CLUSTERS OF 4 HOLES FOR ATTACHING PURLIN BRACES. THESE CLUSTERS ARE REPRESENTED BY ONE OF THE SYMBOLS BELOW:
  O – DO NOT INSTALL PURLIN BRACES AT THIS CLUSTER LOCATION.
  ] – INSTALL PURLIN BRACES AT THIS CLUSTER LOCATION. SEE SECONDARY ROOF DRAWING FOR BRACE REQUIREMENTS.
- INSTALL PURLIN BRACES AT THE RIDGE AND WORK TOWARD THE EAVE.
- CHANNEL BRACE MAY BE LOCATED IN EITHER SET OF SLOTS IN CLUSTER PROVIDED THEY ARE ALIGNED FROM EAVE TO EAVE IN A GIVEN BAY.

REV. DATE: 07/01/08 | REV. NO. 00 | BR09RY | PURLIN BRACE CLUSTER LOCATION
END BAY CHANNEL LOCATION

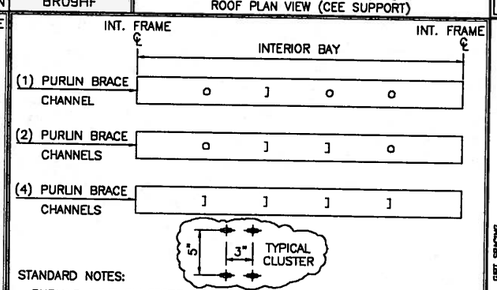

STANDARD NOTES:
- PURLINS HAVE CLUSTERS OF 4 HOLES FOR ATTACHING PURLIN BRACES. THESE CLUSTERS ARE REPRESENTED BY ONE OF THE SYMBOLS BELOW:
  O – DO NOT INSTALL PURLIN BRACES AT THIS CLUSTER LOCATION.
  ] – INSTALL PURLIN BRACES AT THIS CLUSTER LOCATION. SEE SECONDARY ROOF DRAWING FOR BRACE REQUIREMENTS.
- INSTALL PURLIN BRACES AT THE RIDGE AND WORK TOWARD THE EAVE.
- CHANNEL BRACE MAY BE LOCATED IN EITHER SET OF SLOTS IN CLUSTER PROVIDED THEY ARE ALIGNED FROM EAVE TO EAVE IN A GIVEN BAY.

REV. DATE: 07/01/08 | REV. NO. 00 | BR09RZ | PURLIN BRACE CLUSTER LOCATION
INTERIOR BAY CHANNEL LOCATION

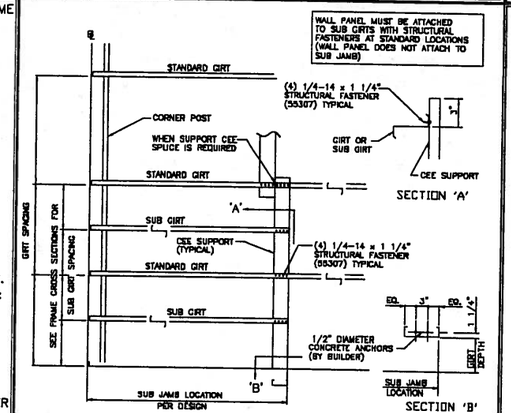

REV. DATE: 07/01/08 | REV. NO. 00 | BR10D6 | CORNER ZONE BRACING
WALL PLAN VIEW (CEE SUPPORT)

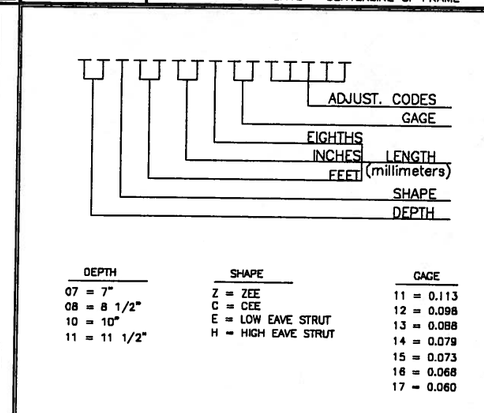

DEPTH	SHAPE	GAGE
07 = 7"	Z = ZEE	11 = 0.113
08 = 8 1/2"	C = CEE	12 = 0.098
10 = 10"	E = LOW EAVE STRUT	13 = 0.088
11 = 11 1/2"	H = HIGH EAVE STRUT	14 = 0.079
		15 = 0.073
		16 = 0.068
		17 = 0.060

REV. DATE: 07/01/08 | REV. NO. 00 | EN51B1 | SECONDARY PART MARK NUMBER
COMMON GENERATED MARK NUMBERS

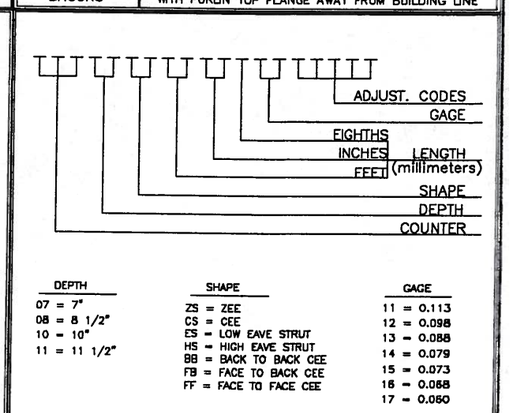

DEPTH	SHAPE	GAGE
07 = 7"	ZS = ZEE	11 = 0.113
08 = 8 1/2"	CS = CEE	12 = 0.098
10 = 10"	ES = LOW EAVE STRUT	13 = 0.088
11 = 11 1/2"	HS = HIGH EAVE STRUT	14 = 0.079
	BB = BACK TO BACK CEE	15 = 0.073
	FB = FACE TO BACK CEE	16 = 0.068
	FF = FACE TO FACE CEE	17 = 0.060

REV. DATE: 07/01/08 | REV. NO. 00 | EN51B2 | SPECIAL SECONDARY PART MARK KEY
COMMON GENERATED MARK NUMBERS

ERECTION DRAWING PART MARK

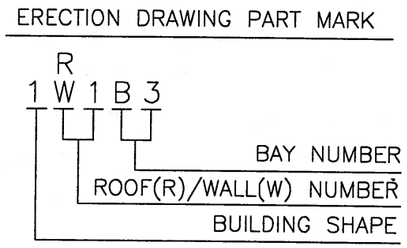

THE BAY/BUNDLE CODE IDENTIFIES THE BUILDING ROOF/WALL PLANE AND BAY

REV. DATE: 07/01/08 | REV. NO. 00 | EN51B3 | SECONDARY BUNDLE LOCATION KEY
ALL SECONDARY DEPTHS

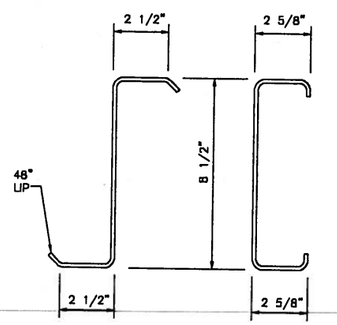

REV. DATE: 07/01/08 | REV. NO. 00 | EN53F1 | PURLIN AND GIRT SIZES
8 1/2" 216mm

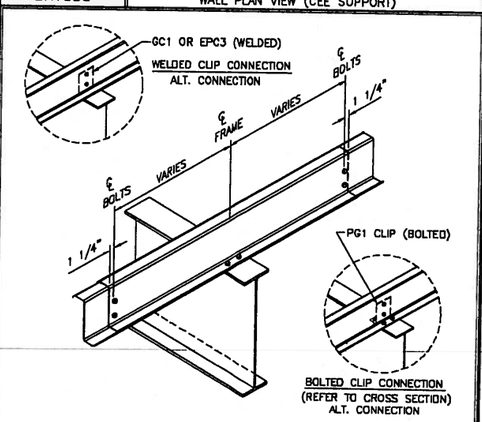

REV. DATE: 07/01/08 | REV. NO. 00 | RS01T1 | PURLIN CONNECTION AT INTERIOR FRAME
CONTINUOUS PURLINS

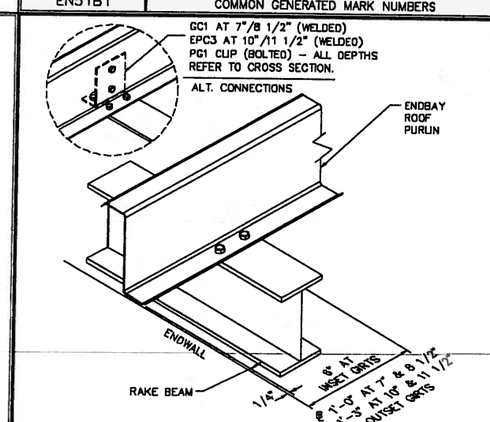

REV. DATE: 03/27/12 | REV. NO. 01 | RS02T1 | PURLIN CONNECTION TO END FRAME
CONTINUOUS PURLINS

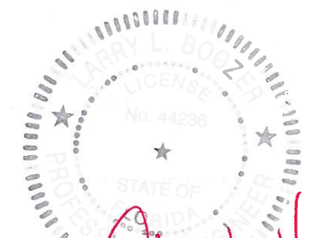

Larry L. Boozer, P.E. No. 44236
VP Buildings, Inc.
7031 Albert Pick Rd., Suite 200
Greensboro, NC 27409

PERMIT SET- For Building Dept. Approval

1. UNLESS NOTED, USE 1/2 X 1 1/2 A-325 SNUG TIGHTENED BOLTS FOR ALL SECONDARY CONNECTIONS.
2. FLANGE BRACES ARE AN INTEGRAL PART OF THE STABILITY OF THE STRUCTURAL SYSTEM AND MUST BE PROPERLY INSTALLED PRIOR TO ERECTION OF WALL AND ROOF SHEETS.
3. REMOVAL OR ALTERATION OF ANY COMPONENT IS PROHIBITED.

THE VP ENGINEER'S SEAL APPLIES ONLY TO THE WORK PRODUCT OF VP AND DESIGN AND PERFORMANCE REQUIREMENTS SPECIFIED BY VP. THE VP ENGINEER'S SEAL DOES NOT APPLY TO THE PERFORMANCE OR DESIGN OF ANY OTHER PRODUCT OR COMPONENT FURNISHED BY VP EXCEPT TO ANY DESIGN OR PERFORMANCE REQUIREMENTS SPECIFIED BY VP.

THIS DRAWING, INCLUDING THE INFORMATION HEREON, REMAINS THE PROPERTY OF VP BUILDINGS. IT IS PROVIDED SOLELY FOR ERECTING THE BUILDING DESCRIBED IN THE APPLICABLE PURCHASE ORDER AND SHALL NOT BE MODIFIED, REPRODUCED OR USED FOR ANY OTHER PURPOSE WITHOUT PRIOR WRITTEN APPROVAL OF VP BUILDINGS.

THE GENERAL CONTRACTOR AND/OR ERECTOR IS SOLELY RESPONSIBLE FOR ACCURATE GOOD QUALITY WORKMANSHIP IN ERECTING THIS BUILDING IN ACCORDANCE WITH THIS DRAWING, DETAILS REFERENCED IN THIS DRAWING, ALL APPLICABLE VP BUILDINGS ERECTION GUIDES, AND INDUSTRY STANDARDS PERTAINING TO PROPER ERECTION, INCLUDING THE CORRECT USE OF TEMPORARY BRACING.

VP Buildings
3200 Players Club Circle Memphis TN 38125

REV	DATE	BY	DESCRIPTION

NTS

11/1/2012 12:13:20

ROOF SECONDARY SED'S

BUILDER	Lemartec Eng. & Const. Corp.
CUSTOMER	Florida Power and Light
LOCATION	Homestead, Florida
PROJECT	FPL-Dry Storage Building
BUILDER'S PO#	2706-12158
FILENAME	2706-12158-FPL-Dry Storage Building copy 2 nom TW

VP BUILDINGS VARCO PRUDEN
VPC VERSION: 2012.3

JOB #	12-23530
DATE	11/7/2012
DRAWN/CHECK	VPC / JLB
PAGE	

A Division of Riverpoint Buildings North America, Inc.

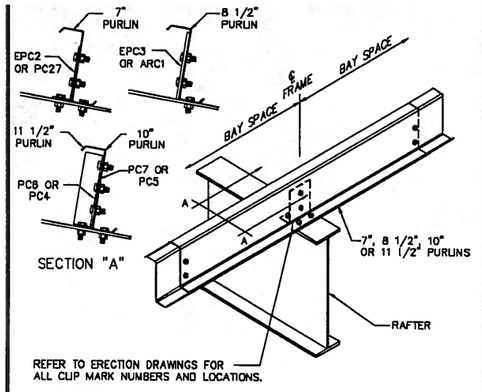

REV. DATE: 04/27/11	REV. NO. 01	ANTI-ROLL PURLIN CLIPS WHEN REQUIRED BY DESIGN
RS03J1		

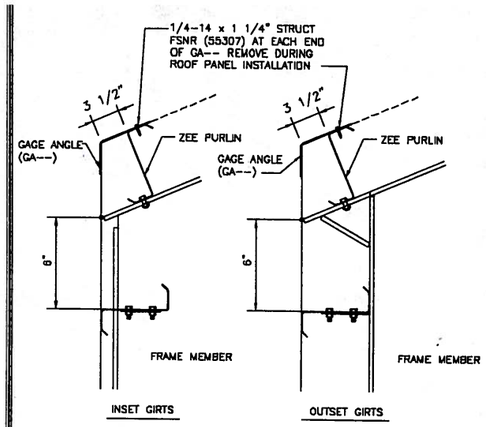

REV. DATE: 07/01/09	REV. NO. 00	LOW EAVE CONDITION OVER 4:12 ROOF PITCH
RS11SB		

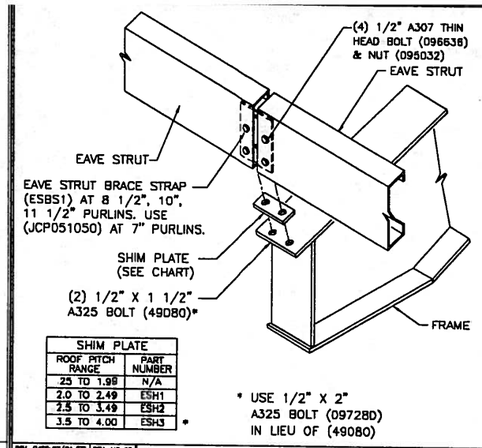

SHIM PLATE	
ROOF PITCH RANGE	PART NUMBER
.25 TO 1.99	N/A
2.0 TO 2.49	ESH1
2.5 TO 3.49	ESH2
3.5 TO 4.00	ESH3 *

REV. DATE: 07/01/09	REV. NO. 00	EAVE STRUT CONNECTION AT INTERIOR FRAME
RS12PA		

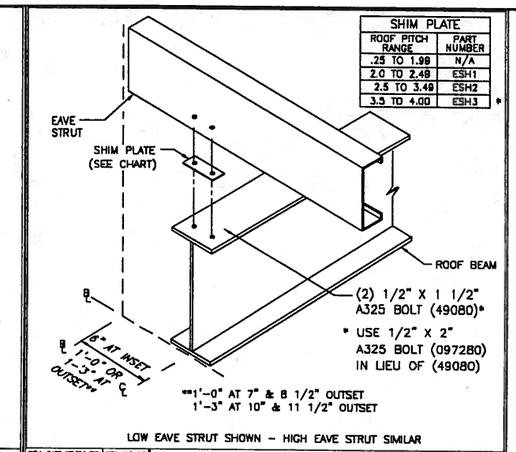

SHIM PLATE	
ROOF PITCH RANGE	PART NUMBER
.25 TO 1.99	N/A
2.0 TO 2.49	ESH1
2.5 TO 3.49	ESH2
3.5 TO 4.00	ESH3 *

REV. DATE: 07/01/09	REV. NO. 00	EAVE STRUT CONNECTION AT END FRAME
RS12PH		

LARRY L. BOOZER LICENSE No. 44236 STATE OF FLORIDA PROFESSIONAL ENGINEER

11/13/12

Larry L. Boozer, P.E. No. 44236
VP Buildings, Inc.
7031 Albert Pick Rd., Suite 200
Greensboro, NC 27409

PERMIT SET- For Building Dept. Approval

1. UNLESS NOTED, USE 1/2 X 1 1/2 A-325 SNUG TIGHTENED BOLTS FOR ALL SECONDARY CONNECTIONS.
2. FLANGE BRACES ARE AN INTEGRAL PART OF THE STABILITY OF THE STRUCTURAL SYSTEM AND MUST BE PROPERLY INSTALLED PRIOR TO ERECTION OF WALL AND ROOF SHEETS.
3. REMOVAL OR ALTERATION OF ANY COMPONENT IS PROHIBITED.

THE VP ENGINEER'S SEAL APPLIES ONLY TO THE WORK PRODUCT OF VP AND DESIGN AND PERFORMANCE REQUIREMENTS SPECIFIED BY VP. THE VP ENGINEER'S SEAL DOES NOT APPLY TO THE PERFORMANCE OR DESIGN OF ANY OTHER PRODUCT OR COMPONENT FURNISHED BY VP EXCEPT TO ANY DESIGN OR PERFORMANCE REQUIREMENTS SPECIFIED BY VP.

THIS DRAWING, INCLUDING THE INFORMATION HEREON, REMAINS THE PROPERTY OF VP BUILDINGS. IT IS PROVIDED SOLELY FOR ERECTING THE BUILDING DESCRIBED IN THE APPLICABLE PURCHASE ORDER AND SHALL NOT BE MODIFIED, REPRODUCED OR USED FOR ANY OTHER PURPOSE WITHOUT PRIOR WRITTEN APPROVAL OF VP BUILDINGS.

THE GENERAL CONTRACTOR AND/OR ERECTOR IS SOLELY RESPONSIBLE FOR ACCURATE GOOD QUALITY WORKMANSHIP IN ERECTING THIS BUILDING IN ACCORDANCE WITH THIS DRAWING, DETAILS REFERENCED IN THIS DRAWING, ALL APPLICABLE VP BUILDINGS ERECTION GUIDES, AND INDUSTRY STANDARDS PERTAINING TO PROPER ERECTION, INCLUDING THE CORRECT USE OF TEMPORARY BRACING.

VP Buildings
3200 Players Club Circle Memphis TN 38125

REV	DATE	BY	DESCRIPTION

NTS

11/1/2012 12:13:21

ROOF SECONDARY SED'S

BUILDER	Lemartec Eng. & Const. Corp.
CUSTOMER	Florida Power and Light
LOCATION	Homestead, Florida
PROJECT	FPL-Dry Storage Building
BUILDERS PO#	2706-12158
FILENAME:	2706-12158-FPL-Dry Storage Building copy 2 from rw

VP BUILDINGS VARCO PRUDEN

VPC VERSION: 2012.3

JOB #	12-23530
DATE	11/7/2012
DRAWN/CHECK	VPC / JLB
PAGE	

Subsidiary of Blue Linx Buildings North America, Inc.

Part Mark Key

1	VCC07003090
2	PG1
3	DJC1101
4	H5
5	JTG1
6	GFA106

Secondary Part Schedule

Mark	Part	Thick.	Depth	Lap	Detail
G123	08Z1502417Q400	0.0600	8 1/2"	2'-10 1/2"	WS01G3
G125	08Z29114174400	0.0600	8 1/2"	2'-10 1/2"	WS01G3
G146	08Z1202417DQ00	0.0600	8 1/2"		WS01G2
G156	08Z1502416Q400	0.0680	8 1/2"	2'-10 1/2"	WS01G3
G34	08Z1002417DG00	0.0600	8 1/2"		WS20F2,WS01G2
G6	08Z29114164400	0.0680	8 1/2"	2'-10 1/2"	WS01G3
H5	00208JS0300017	0.0600	8 1/2"		WS20F9
J54	00108JS0511517	0.0600	8 1/2"		WS20F2,WS20FB,WS20F9,WS20B5,WS20B2

Framed Opening Locations

Id	Width	Height	Sill Ht.	Frame	To	Dimen.
FO1	3'-0"	3'-0"	12'-3"	1	Jamb-L	10'-6"

Rod and Strut Bolts

Id	Qty	Grade	Bolt Diam.	Bolt Length	PartNo
1	4	A325	1"	3 1/2"	0097288

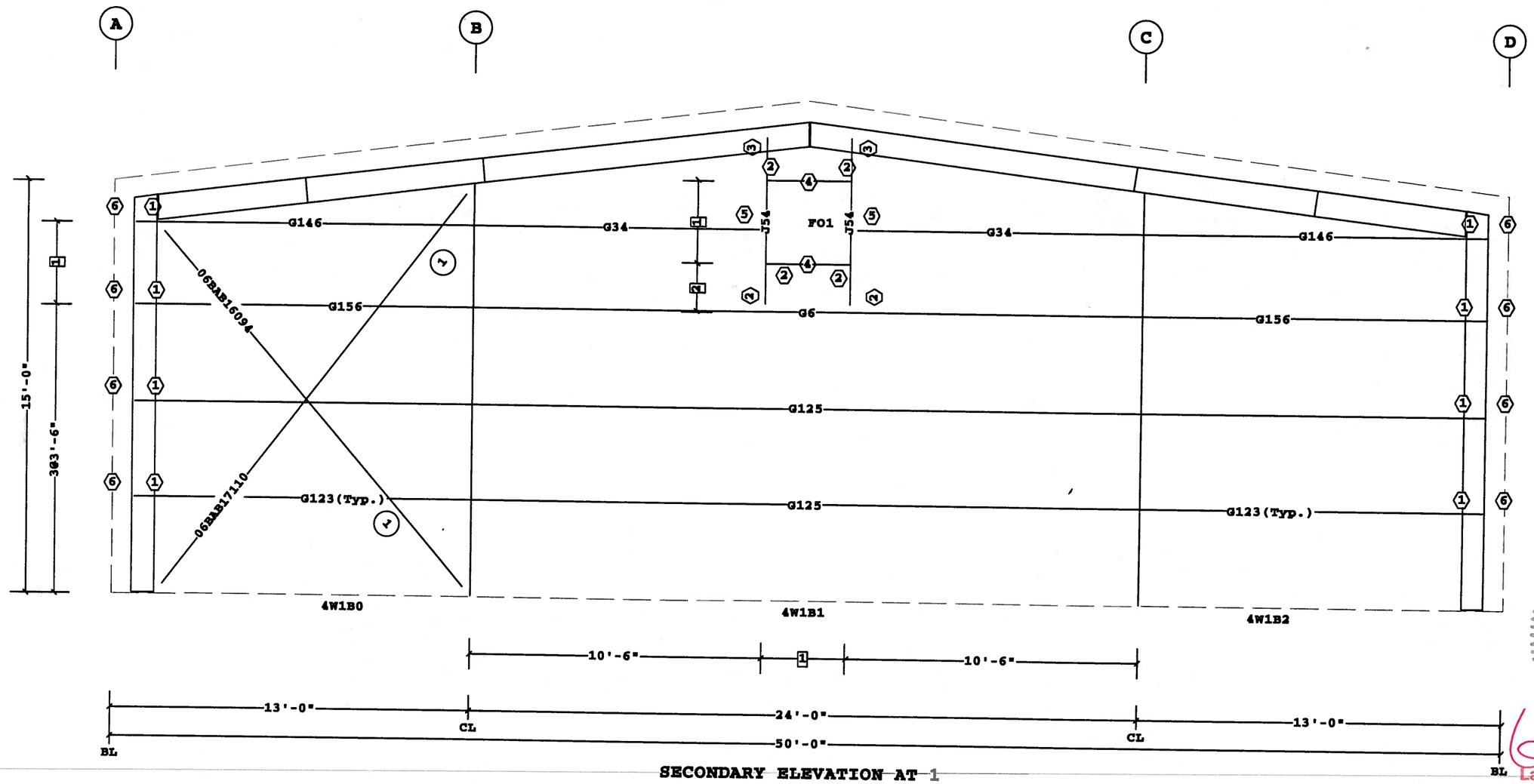

SECONDARY ELEVATION AT 1

2	1'-9"
1	3'-0"

Dimension Key

LARRY L. BOOZER LICENSE No. 44236 STATE OF FLORIDA PROFESSIONAL ENGINEER

11/13/12

Larry L. Boozer, P.E. No. 44236
VP Buildings, Inc.
7031 Albert Pick Rd., Suite 200
Greensboro, NC 27409

1. UNLESS NOTED, USE 1/2 X 1 1/2 A-325 SNUG TIGHTENED BOLTS FOR ALL SECONDARY CONNECTIONS.
2. FLANGE BRACES ARE AN INTEGRAL PART OF THE STABILITY OF THE STRUCTURAL SYSTEM AND MUST BE PROPERLY INSTALLED PRIOR TO ERECTION OF WALL AND ROOF SHEETS.
3. REMOVAL OR ALTERATION OF ANY COMPONENT IS PROHIBITED.

THE VP ENGINEER'S SEAL APPLIES ONLY TO THE WORK PRODUCT OF VP AND DESIGN AND PERFORMANCE REQUIREMENTS SPECIFIED BY VP. THE VP ENGINEER'S SEAL DOES NOT APPLY TO THE PERFORMANCE OR DESIGN OF ANY OTHER PRODUCT OR COMPONENT FURNISHED BY VP EXCEPT TO ANY DESIGN OR PERFORMANCE REQUIREMENTS SPECIFIED BY VP.

Shape Name = Dry Stge Building, Wall = 1

THIS DRAWING, INCLUDING THE INFORMATION HEREON, REMAINS THE PROPERTY OF VP BUILDINGS. IT IS PROVIDED SOLELY FOR ERECTING THE BUILDING DESCRIBED IN THE APPLICABLE PURCHASE ORDER AND SHALL NOT BE MODIFIED, REPRODUCED OR USED FOR ANY OTHER PURPOSE WITHOUT PRIOR WRITTEN APPROVAL OF VP BUILDINGS.

THE GENERAL CONTRACTOR AND/OR ERECTOR IS SOLELY RESPONSIBLE FOR ACCURATE GOOD QUALITY WORKMANSHIP IN ERECTING THIS BUILDING IN ACCORDANCE WITH THIS DRAWING, DETAILS REFERENCED IN THIS DRAWING, ALL APPLICABLE VP BUILDINGS ERECTION GUIDES, AND INDUSTRY STANDARDS PERTAINING TO PROPER ERECTION, INCLUDING THE CORRECT USE OF TEMPORARY BRACING.

VP Buildings
3200 Players Club Circle Memphis TN 38125

REV	DATE	BY	DESCRIPTION

NTS

11/1/2012 12:13:24

PERMIT SET- For Building Dept. Approval

SECONDARY ELEVATION AT 1

BUILDER	Lemartec Eng. & Const. Corp.
CUSTOMER	Florida Power and Light
LOCATION	Homestead, Florida
PROJECT	FPL-Dry Storage Building
BUILDER'S PO#	2706-12158
FILENAME:	2706-12158-FPL-Dry Storage Building copy 2 from IV

VP BUILDINGS VARCO PRUDEN

VPC VERSION: 2012.3

JOB #	12-23530
DATE	11/7/2012
DRAWN/CHECK	VPC / JLB
PAGE	

© Copyright Buildings North America, Inc.

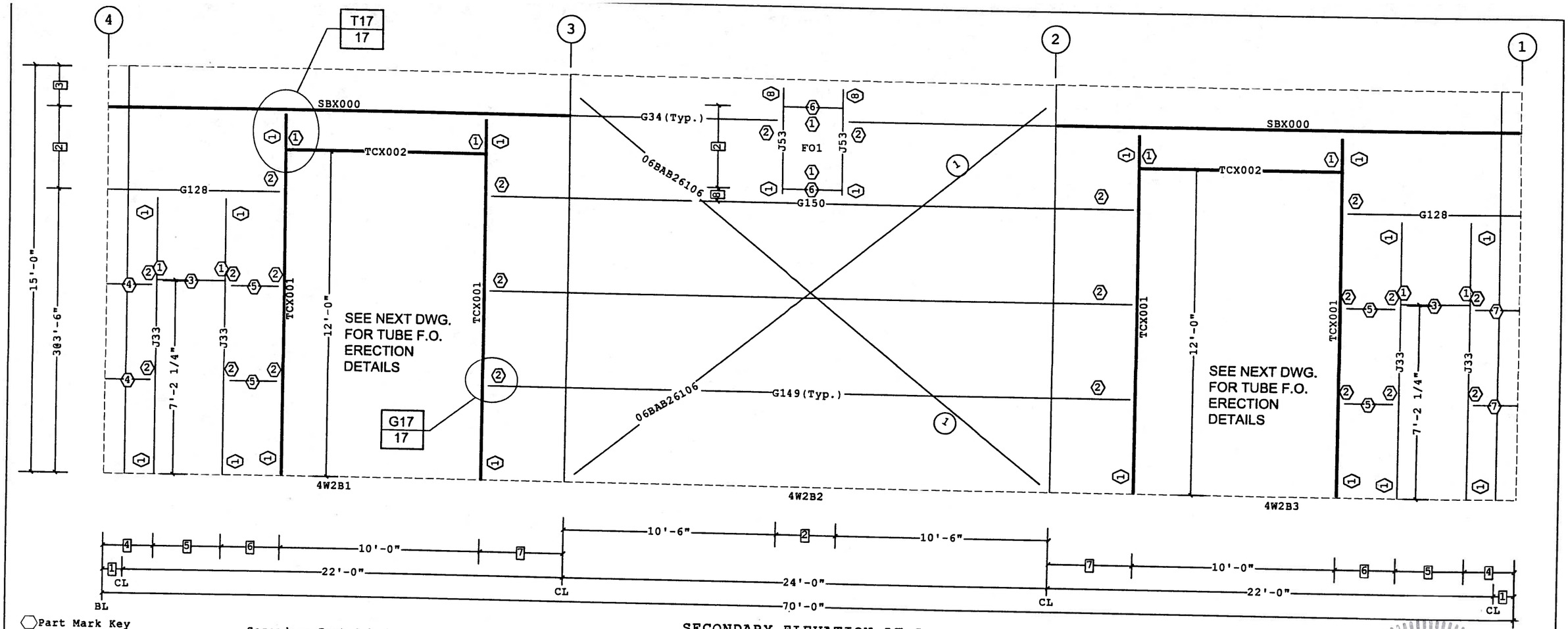

SECONDARY ELEVATION AT A

Part Mark Key

1	PG1
2	JTG1
3	H7
4	G147
5	G148
6	H5
7	G151
8	TSC1-SEE SED WS20B6

8	6"
7	4'-2"
6	2'-11 1/2"
5	3'-4 1/2"
4	2'-6"
3	1'-6"
2	3'-0"
1	1'-0"

Dimension Key

Secondary Part Schedule

Mark	Part	Thick.	Depth	Lap	Detail
	07C2102411CC20	0.1130	7"		
G128	08Z0806417AG00	0.0600	8 1/2"		WS20F2
G129	08Z22114##AD00	0.1130	8 1/2"		WS01G2
G147	00108ZS020241700	0.0600	8 1/2"		WS20F2
G148	00208ZS020501700	0.0600	8 1/2"		WS20F2
G149	00308ZS310941400	0.0790	8 1/2"		WS01G3,WS20F2
G150	00408ZS310941600	0.0680	8 1/2"		WS01G3,WS20F2
G151	00508ZS020241700	0.0600	8 1/2"		WS20F2
G153	08Z2311412DD00	0.0980	8 1/2"		WS01G2
G34	08Z1002417DG00	0.0600	8 1/2"		WS20F2,WS01G2
H5	00208JS0300017	0.0600	8 1/2"		WS20F9
H7	00608JS0304417	0.0600	8 1/2"		WS20F9
H9	00708JS1000017	0.0600	8 1/2"		WS20F9
J33	00308JS1002217	0.0600	8 1/2"		WS20F9,WS20F2,WS20B2,WS20B8
J48	00408JS1302215	0.0730	8 1/2"		WS20F9,WS20F2,WS20B2,WS20B8
J49	00508JS1302216	0.0680	8 1/2"		WS20F9,WS20F2,WS20B2,WS20B8
J53	00808JS0310417	0.0600	8 1/2"		WS20F2,WS20FB,WS20F9,WS20B2

Framed Opening Locations

Id	Width	Height	Sill Ht.	Frame	To	Dimen.
FO1	3'-0"	3'-0"	11'-0"	2	Jamb-L	10'-6"

Rod and Strut Bolts

Id	Qty	Grade	Bolt Diam.	Bolt Length	PartNo
1	4	A325	1"	3 1/2"	0097288

Frame Member Schedule

Part	Width	Thick	WebThk.	Depth	Approx.Lgth
SBX000	5.0000	.25	.1345	8.5"	22'-0
TCX001	8 X 8 X 1/4 TUBE			8"	13'-0
TCX002	8 X 8 X 1/4 TUBE			8"	10'-0

LARRY L. BOOZER LICENSE No. 44236 STATE OF FLORIDA PROFESSIONAL ENGINEER

11/13/12

Larry L. Boozer, P.E. No. 44236
VP Buildings, Inc.
7031 Albert Pick Rd., Suite 200
Greensboro, NC 27409

1. UNLESS NOTED, USE 1/2 X 1 1/2 A-325 SNUG TIGHTENED BOLTS FOR ALL SECONDARY CONNECTIONS.
2. FLANGE BRACES ARE AN INTEGRAL PART OF THE STABILITY OF THE STRUCTURAL SYSTEM AND MUST BE PROPERLY INSTALLED PRIOR TO ERECTION OF WALL AND ROOF SHEETS.
3. REMOVAL OR ALTERATION OF ANY COMPONENT IS PROHIBITED.

THE VP ENGINEER'S SEAL APPLIES ONLY TO THE WORK PRODUCT OF VP AND DESIGN AND PERFORMANCE REQUIREMENTS SPECIFIED BY VP. THE VP ENGINEER'S SEAL DOES NOT APPLY TO THE PERFORMANCE OR DESIGN OF ANY OTHER PRODUCT OR COMPONENT FURNISHED BY VP EXCEPT TO ANY DESIGN OR PERFORMANCE REQUIREMENTS SPECIFIED BY VP.

THIS DRAWING, INCLUDING THE INFORMATION HEREON, REMAINS THE PROPERTY OF VP BUILDINGS. IT IS PROVIDED SOLELY FOR ERECTING THE BUILDING DESCRIBED IN THE APPLICABLE PURCHASE ORDER AND SHALL NOT BE MODIFIED, REPRODUCED OR USED FOR ANY OTHER PURPOSE WITHOUT PRIOR WRITTEN APPROVAL OF VP BUILDINGS.

THE GENERAL CONTRACTOR AND/OR ERECTOR IS SOLELY RESPONSIBLE FOR ACCURATE GOOD QUALITY WORKMANSHIP IN ERECTING THIS BUILDING IN ACCORDANCE WITH THIS DRAWING, DETAILS REFERENCED IN THIS DRAWING, ALL APPLICABLE VP BUILDINGS ERECTION GUIDES, AND INDUSTRY STANDARDS PERTAINING TO PROPER ERECTION, INCLUDING THE CORRECT USE OF TEMPORARY BRACING.

VP Buildings
3200 Players Club Circle Memphis TN 38125

REV	DATE	BY	DESCRIPTION

NTS

11/1/2012 12:13:25

PERMIT SET- For Building Dept. Approval

SECONDARY ELEVATION AT A

BUILDER	Lemartec Eng. & Const. Corp.
CUSTOMER	Florida Power and Light
LOCATION	Homestead, Florida
PROJECT	FPL-Dry Storage Building
BUILDER'S PO#	2706-12158
FILENAME	2706-12158-FPL-Dry Storage Building

VP BUILDINGS

VPC VERSION: 2012.3

a division of BlueScope Buildings North America, Inc.

JOB #	12-23530
DATE	11/2/2012
DRAWN/CHECK	VPC / TLW
PAGE	16

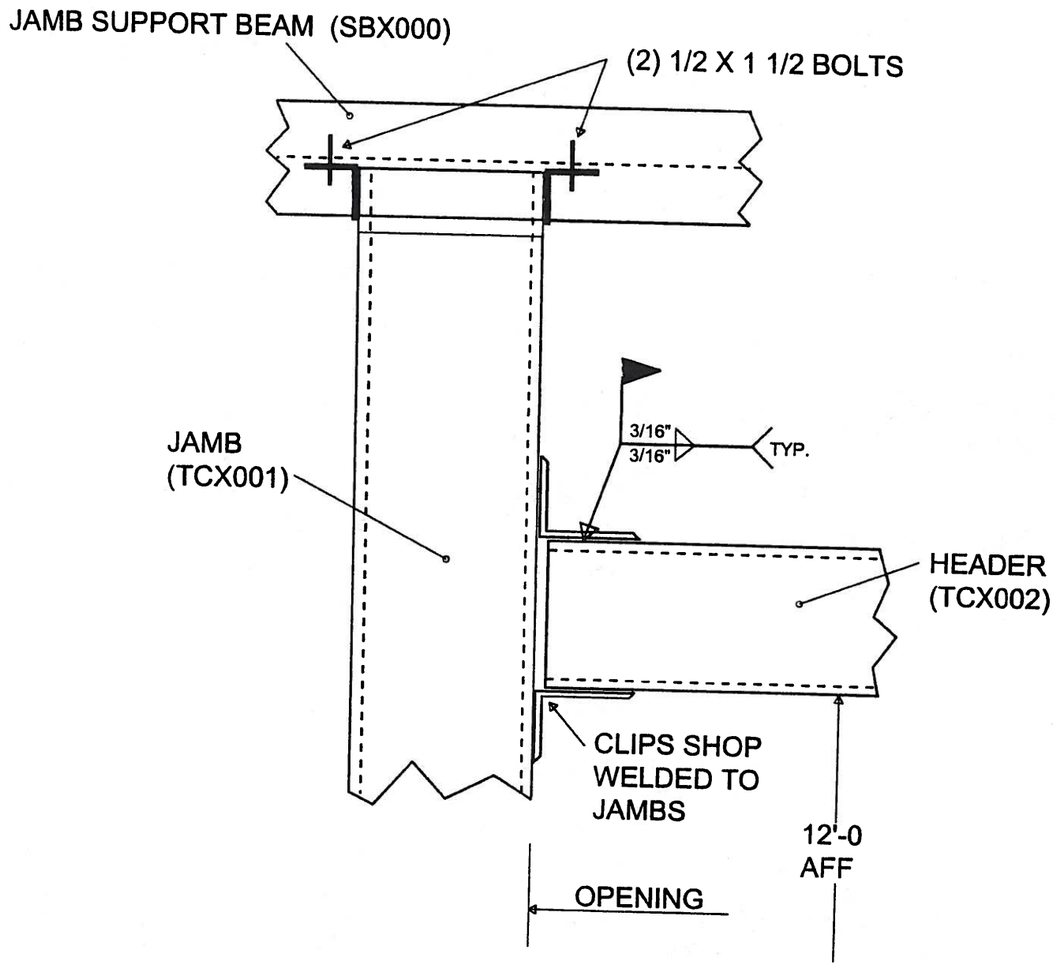

DETAIL T17 / 17

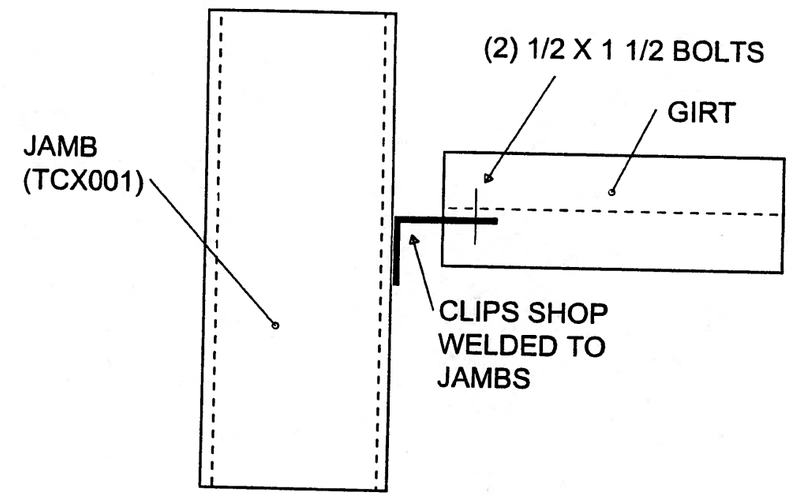

DETAIL G17 / 17

LARRY L. BOOZER
LICENSE
No. 44236
STATE OF
FLORIDA
PROFESSIONAL ENGINEER

11/13/12

Larry L. Boozer, P.E. No. 44236
VP Buildings, Inc.
7031 Albert Pick Rd., Suite 200
Greensboro, NC 27409

THE VP ENGINEER'S SEAL APPLIES ONLY TO THE WORK PRODUCT OF VP AND DESIGN AND PERFORMANCE REQUIREMENTS SPECIFIED BY VP. THE VP ENGINEER'S SEAL DOES NOT APPLY TO THE PERFORMANCE OR DESIGN OF ANY OTHER PRODUCT OR COMPONENT FURNISHED BY VP EXCEPT TO ANY DESIGN OR PERFORMANCE REQUIREMENTS SPECIFIED BY VP.

THIS DRAWING, INCLUDING THE INFORMATION HEREON, REMAINS THE PROPERTY OF VP BUILDINGS. IT IS PROVIDED SOLELY FOR ERECTING THE BUILDING DESCRIBED IN THE APPLICABLE PURCHASE ORDER AND SHALL NOT BE MODIFIED, REPRODUCED OR USED FOR ANY OTHER PURPOSE WITHOUT PRIOR WRITTEN APPROVAL OF VP BUILDINGS.

THE GENERAL CONTRACTOR AND/OR ERECTOR IS SOLELY RESPONSIBLE FOR ACCURATE GOOD QUALITY WORKMANSHIP IN ERECTING THIS BUILDING IN ACCORDANCE WITH THIS DRAWING, DETAILS REFERENCED IN THIS DRAWING, ALL APPLICABLE VP BUILDINGS ERECTION GUIDES, AND INDUSTRY STANDARDS PERTAINING TO PROPER ERECTION, INCLUDING THE CORRECT USE OF TEMPORARY BRACING.

VP Buildings
3200 Players Club Circle Memphis TN 38125

REV	DATE	BY	DESCRIPTION

NTS

11/2/2012 10:06:19

PERMIT SET- For Building Dept. Approval

TUBE F.O. DETAILS DRAWING

BUILDER: Lemartec Eng. & Const. Corp.
CUSTOMER: Florida Power and Light
LOCATION: Homestead, Florida
PROJECT: FPL-Dry Storage Building
BUILDER'S PO#: 2706-12158
FILENAME: 2706-12158-FPL-Dry Storage Building

VP BUILDINGS
VPC VERSION: 2012.3
a division of BlueScope Buildings North America, Inc.

JOB #: 12-23530
DATE: 11/2/2012
DRAWN/CHECK: VPC / TLW
PAGE: 17

Part Mark Key

1	VCC07003090
2	PG1
3	DJC1101
4	H5
5	JTG1
6	GFA106

Secondary Part Schedule

Mark	Part	Thick.	Depth	Lap	Detail
G123	08Z1502417Q400	0.0600	8 1/2"	2'-10 1/2"	WS01G3
G125	08Z29114174400	0.0600	8 1/2"	2'-10 1/2"	WS01G3
G146	08Z1202417DQ00	0.0600	8 1/2"		WS01G2
G156	08Z1502416Q400	0.0680	8 1/2"	2'-10 1/2"	WS01G3
G34	08Z1002417DG00	0.0600	8 1/2"		WS20F2,WS01G2
G6	08Z29114164400	0.0680	8 1/2"	2'-10 1/2"	WS01G3
H5	00208JS0300017	0.0600	8 1/2"		WS20F9
J54	00108JS0511517	0.0600	8 1/2"		WS20F2,WS20FB,WS20F9,WS20B5,WS20B2

Rod and Strut Bolts

Id	Qty	Grade	Bolt Diam.	Bolt Length	PartNo
1	4	A325	1"	3 1/2"	0097288

Framed Opening Locations

Id	Width	Height	Sill Ht.	Frame	To	Dimen.
FO1	3'-0"	3'-0"	12'-3"	1	Jamb-L	10'-6"

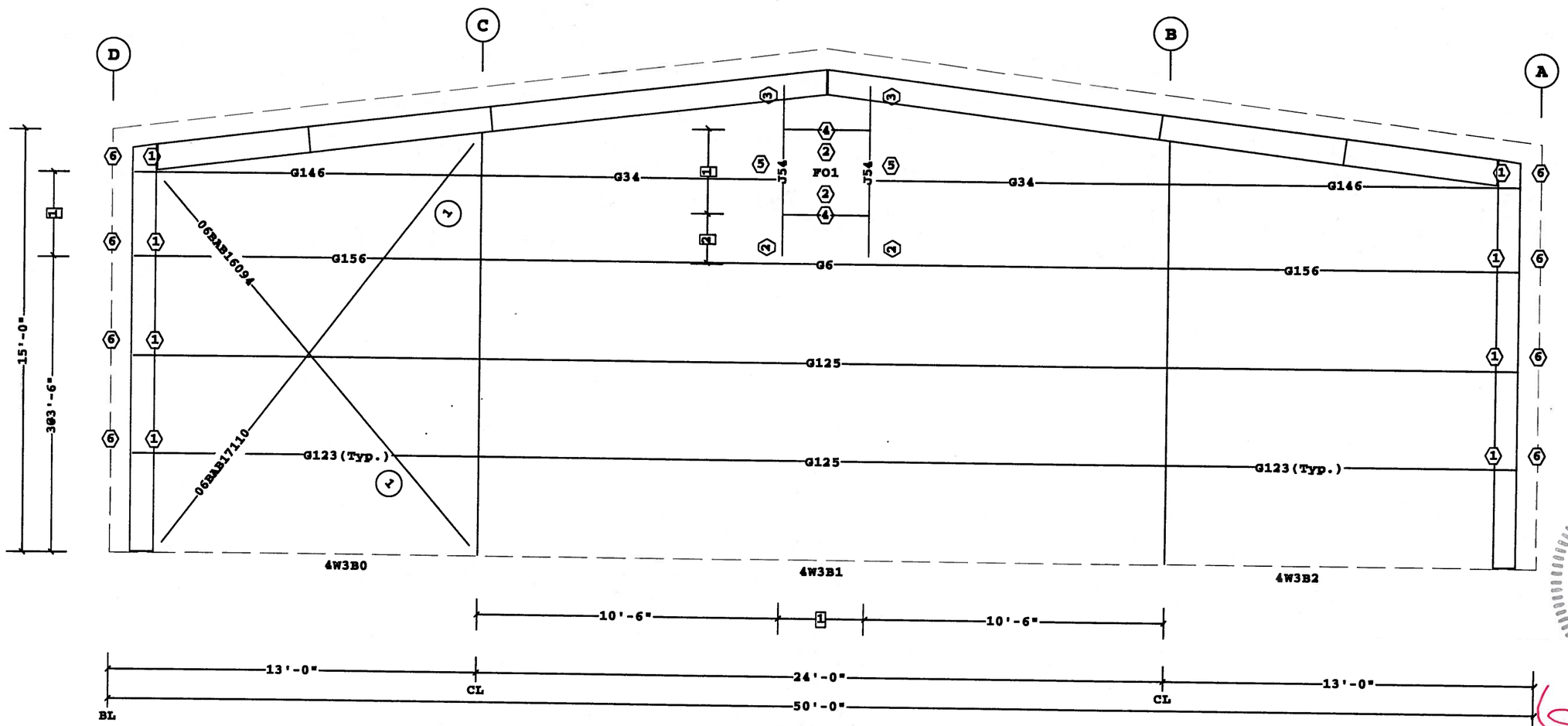

SECONDARY ELEVATION AT 4

2	1'-9"
1	3'-0"

Dimension Key

LARRY L. BOOZER LICENSE No. 44236 STATE OF FLORIDA PROFESSIONAL ENGINEER

Larry L. Boozer, P.E. No. 44236
VP Buildings, Inc.
7031 Albert Pick Rd., Suite 200
Greensboro, NC 27409

PERMIT SET- For Building Dept. Approval

1. UNLESS NOTED, USE 1/2 X 1 1/2 A-325 SNUG TIGHTENED BOLTS FOR ALL SECONDARY CONNECTIONS.
2. FLANGE BRACES ARE AN INTEGRAL PART OF THE STABILITY OF THE STRUCTURAL SYSTEM AND MUST BE PROPERLY INSTALLED PRIOR TO ERECTION OF WALL AND ROOF SHEETS.
3. REMOVAL OR ALTERATION OF ANY COMPONENT IS PROHIBITED.

THE VP ENGINEER'S SEAL APPLIES ONLY TO THE WORK PRODUCT OF VP AND DESIGN AND PERFORMANCE REQUIREMENTS SPECIFIED BY VP. THE VP ENGINEER'S SEAL DOES NOT APPLY TO THE PERFORMANCE OR DESIGN OF ANY OTHER PRODUCT OR COMPONENT FURNISHED BY VP EXCEPT TO ANY DESIGN OR PERFORMANCE REQUIREMENTS SPECIFIED BY VP.

Shape Name = Dry Stge Building, Wall = 3

THIS DRAWING, INCLUDING THE INFORMATION HEREON, REMAINS THE PROPERTY OF VP BUILDINGS. IT IS PROVIDED SOLELY FOR ERECTING THE BUILDING DESCRIBED IN THE APPLICABLE PURCHASE ORDER AND SHALL NOT BE MODIFIED, REPRODUCED OR USED FOR ANY OTHER PURPOSE WITHOUT PRIOR WRITTEN APPROVAL OF VP BUILDINGS.

THE GENERAL CONTRACTOR AND/OR ERECTOR IS SOLELY RESPONSIBLE FOR ACCURATE GOOD QUALITY WORKMANSHIP IN ERECTING THIS BUILDING IN ACCORDANCE WITH THIS DRAWING, DETAILS REFERENCED IN THIS DRAWING, ALL APPLICABLE VP BUILDINGS ERECTION GUIDES, AND INDUSTRY STANDARDS PERTAINING TO PROPER ERECTION, INCLUDING THE CORRECT USE OF TEMPORARY BRACING.

VP Buildings
3200 Players Club Circle Memphis TN 38125

REV	DATE	BY	DESCRIPTION

NTS

11/1/2012 12:13:26

SECONDARY ELEVATION AT 4

BUILDER	Lemartec Eng. & Const. Corp.
CUSTOMER	Florida Power and Light
LOCATION	Homestead, Florida
PROJECT	FPL-Dry Storage Building
BUILDER'S PO#	2706-12158
FILENAME	2706-12158-FPL-Dry Storage Building copy 2 from TW

VP BUILDINGS VARCO PRUDEN

VPC VERSION: 2012.3

JOB #	12-23530
DATE	11/7/2012
DRAWN/CHECK	VPC / JLB
PAGE	

A Division of Riverbrace Buildings North America, Inc

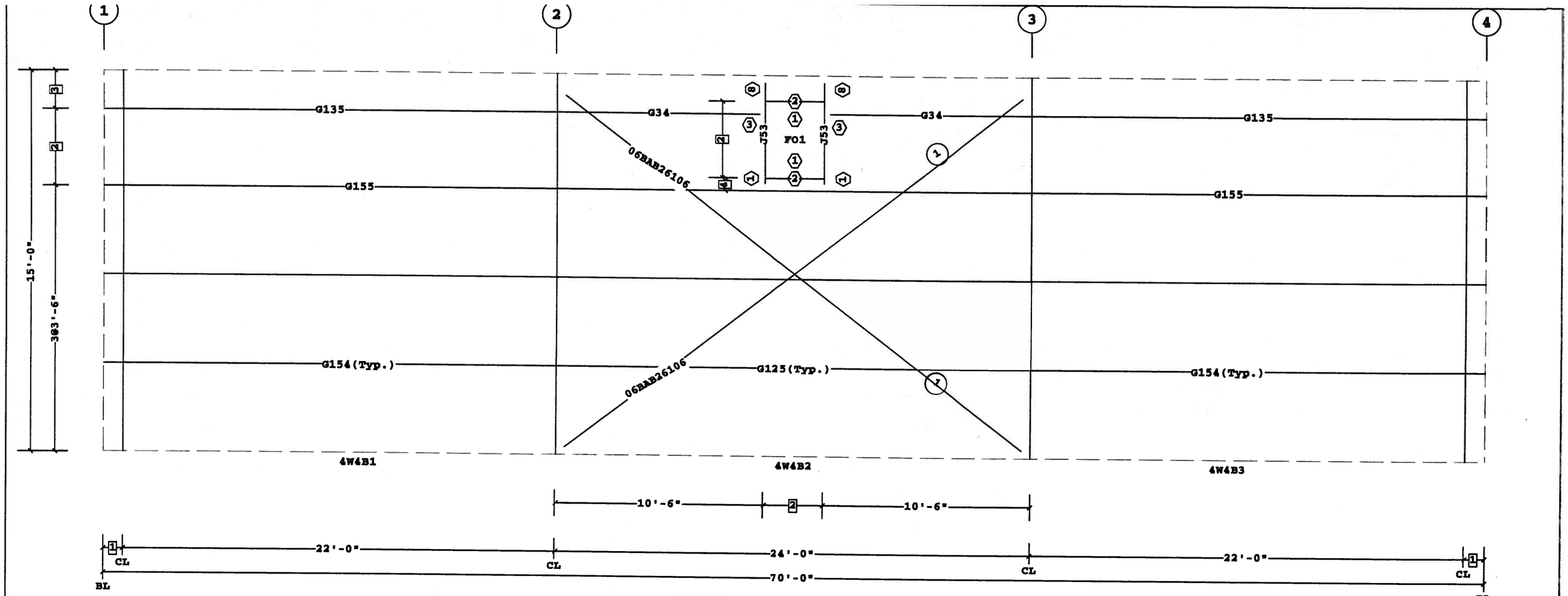

SECONDARY ELEVATION AT D

Part Mark Key

1 PG1
2 H5
3 JTG1
4 6"
3 1'-6"
2 3'-0"
1 1'-0"

Dimension Key

Secondary Part Schedule

Mark	Part	Thick.	Depth	Lap	Detail
G125	08Z29114174400	0.0600	8 1/2"	2'-10 1/2"	WS01G3
G135	08Z2211414AD00	0.0790	8 1/2"		WS01G2
G153	08Z2311412DD00	0.0980	8 1/2"		WS01G2
G154	08Z2511415A400	0.0730	8 1/2"	2'-10 1/2"	WS01G3
G155	08Z2511417A400	0.0600	8 1/2"	2'-10 1/2"	WS01G3
G34	08Z1002417DG00	0.0600	8 1/2"		WS01G2,WS20F2
H5	00208JS0300017	0.0600	8 1/2"		WS20F9
J53	00808JS0310417	0.0600	8 1/2"		WS20F2,WS20FB,WS20F9,WS20B2

Framed Opening Locations

Id	Width	Height	Sill Ht.	Frame	To	Dimen.
FO1	3'-0"	3'-0"	11'-0"	2	Jamb-L	10'-6"

Rod and Strut Bolts

Id	Qty	Grade	Bolt Diam.	Bolt Length	PartNo
1	4	A325	1"	3 1/2"	0097288

LARRY L. BOOZER
LICENSE
No. 44236
STATE OF FLORIDA
PROFESSIONAL ENGINEER

11/13/12

Larry L. Boozer, P.E. No. 44236
VP Buildings, Inc.
7031 Albert Pick Rd., Suite 200
Greensboro, NC 27409

PERMIT SET- For Building Dept. Approval

1. UNLESS NOTED, USE 1/2 X 1 1/2 A-325 SNUG TIGHTENED BOLTS FOR ALL SECONDARY CONNECTIONS.
2. FLANGE BRACES ARE AN INTEGRAL PART OF THE STABILITY OF THE STRUCTURAL SYSTEM AND MUST BE PROPERLY INSTALLED PRIOR TO ERECTION OF WALL AND ROOF SHEETS.
3. REMOVAL OR ALTERATION OF ANY COMPONENT IS PROHIBITED.

THE VP ENGINEER'S SEAL APPLIES ONLY TO THE WORK PRODUCT OF VP AND DESIGN AND PERFORMANCE REQUIREMENTS SPECIFIED BY VP. THE VP ENGINEER'S SEAL DOES NOT APPLY TO THE PERFORMANCE OR DESIGN OF ANY OTHER PRODUCT OR COMPONENT FURNISHED BY VP EXCEPT TO ANY DESIGN OR PERFORMANCE REQUIREMENTS SPECIFIED BY VP.

THIS DRAWING, INCLUDING THE INFORMATION HEREON, REMAINS THE PROPERTY OF VP BUILDINGS. IT IS PROVIDED SOLELY FOR ERECTING THE BUILDING DESCRIBED IN THE APPLICABLE PURCHASE ORDER AND SHALL NOT BE MODIFIED, REPRODUCED OR USED FOR ANY OTHER PURPOSE WITHOUT PRIOR WRITTEN APPROVAL OF VP BUILDINGS.

THE GENERAL CONTRACTOR AND/OR ERECTOR IS SOLELY RESPONSIBLE FOR ACCURATE GOOD QUALITY WORKMANSHIP IN ERECTING THIS BUILDING IN ACCORDANCE WITH THIS DRAWING, DETAILS REFERENCED IN THIS DRAWING, ALL APPLICABLE VP BUILDINGS ERECTION GUIDES, AND INDUSTRY STANDARDS PERTAINING TO PROPER ERECTION, INCLUDING THE CORRECT USE OF TEMPORARY BRACING.

Shape Name = Dry Stge Building, Wall = 4

VP Buildings
3200 Players Club Circle Memphis TN 38125

REV	DATE	BY	DESCRIPTION

NTS

11/1/2012 12:13:27

SECONDARY ELEVATION AT D

BUILDER	Lemartec Eng. & Const. Corp.
CUSTOMER	Florida Power and Light
LOCATION	Homestead, Florida
PROJECT	FPL-Dry Storage Building
BUILDER'S PO#	2706-12158
FILENAME:	2706-12158-FPL-Dry Storage Building copy 2 from FV

VP BUILDINGS
VARCO PRUDEN

VPC VERSION: 2012.3

JOB #	12-23530
DATE	11/7/2012
DRAWN/CHECK	VPC / JLB
PAGE	

Division of Riverstone Buildings North America, Inc.

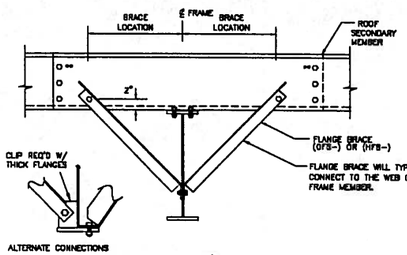

FLANGE BRACE REQUIREMENTS:

RULE#1- ALL FLANGE BRACES ON CROSS SECTIONS MUST BE INSTALLED.
RULE#2- SINGLE FLANGE BRACES ARE REQUIRED WHEN PART MARK ON CROSS SECTION IS NOT ACCOMPANIED BY (2).
RULE#3- FLANGE BRACES ARE REQUIRED BOTH SIDES OF THE FRAME WEB WHEN PART MARK IS ACCOMPANIED BY (2).
RULE#4- WHENEVER POSSIBLE, PLACE SINGLE BRACES TOWARD THE CENTER OF THE BUILDING.
RULE#5- WHENEVER POSSIBLE, PLACE ALL SINGLE BRACES ON THE SAME SIDE OF THE FRAME WEB.

↔ 10" & 11 1/2" PURLINS REQUIRE 3 BOLTS AT EACH END OF PURLIN LAP.

REV. DATE:07/01/08	REV. NO. 00	TYPICAL FLANGE BRACE CONNECTIONS CONT. PURLIN LAP SHOWN, CONT. GIRT & SIMPLE PURLIN
BR06AE		

NOTE: ALL FIELD WELDING SHALL BE DONE IN COMPLIANCE WITH AWS PROCEDURES BY WELDERS QUALIFIED TO PERFORM THE WELD AS DIRECTED BY THE ASSOCIATED WELDING PROCEDURE SPECIFICATION (WPS). A WPS SHALL BE PREPARED BY THE CONTRACTOR FOR EACH WELDING VARIATION SPECIFIED, AS REQUIRED BY CODE. USE E70XX ELECTRODES. THE CONTRACTOR SHALL PROVIDE FOR ANY CODE SPECIFIED SPECIAL INSPECTIONS.

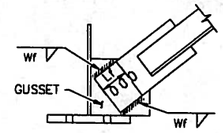

FRONT SIDE WELDS

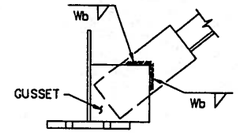

BACK SIDE WELDS

SEE SED BR33L2 FOR WELD SIZES AND LENGTHS IF REQUIRED

NOTE: CONTINGENCY WELDS ARE ALLOWED AS AN ALTERNATE TO BOLTING THE BRACE PADS TO THE GUSSET PLATES. IN CASES WHERE THE BRACES DON'T BOLT UP AND SHIMMING IS NOT DESIRED, IT IS RECOMMENDED TO BOLT THE HIGH END OF THE BRACE AND FIELD WELD THE LOW END.

REV. DATE:04/12/11	REV. NO. 00	BOLTED ANGLE BRACING CONTINGENCY WELDS
BR33L1		

CONTINGENCY WELDS (IF BOLTS NOT INSTALLED)

(PART NO) ANGLE SIZE	FRONT SIDE WELD SIZE REQUIRED (Wf)	FRONT SIDE WELD LENGTH PER SIDE	BACK SIDE WELD SIZE REQUIRED (Wb)
(06BAB_) 2" X 2" X 3/16"	3/16"	3"	5/16"
(09BAB_) 2" X 2" X 1/4"	1/4"	3"	5/16"
(12BAB_) 3" X 3" X 3/16"	3/16"	3"	5/16"
(13BAB_) 3" X 3" X 1/4"	1/4"	4"	5/16"
(14BAB_) 3" X 3" X 5/16"	5/16"	4"	5/16"
(16BAB_) 4" X 4" X 1/4"	5/16"	4.5"	5/16"
(15BAB_) 3" X 3' X 3/8"	5/16"	4"	5/16"
(17BAB_) 4" X 4" X 5/16"	5/16"	5"	5/16"
(18BAB_) 4" X 4" X 3/8"	5/16"	5"	7/16"
(19BAB_) 4" X 4" X 1/2"	9/16"	4"	9/16"

NOTES:

1. REFER TO DETAIL BR33L1 FOR ADDITIONAL INFORMATION.
2. IF THE MINIMUM WELD LENGTH CANNOT BE ACHIEVED, CONTACT YOUR MANUFACTURER FOR EVALUATION.

REV. DATE:11/07/11	REV. NO. 01	BOLTED ANGLE BRACING CONTINGENCY WELDS – SIZES AND LENGTHS
BR33L2		

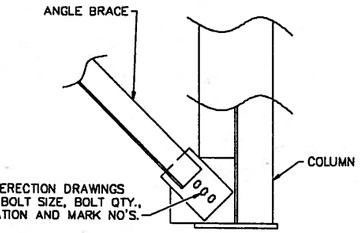

SEE SED BR33L1 AND BR33L2 FOR CONTINGENCY WELDS, IF BOLT HOLES DO NOT ALIGN.

SEE ERECTION GUIDE FOR BASE PLATE SHIMMING INFORMATION.

REV. DATE:04/11/11	REV. NO. 00	BOLTED ANGLE BRACING AT BASE OF COLUMN
BR33M1		

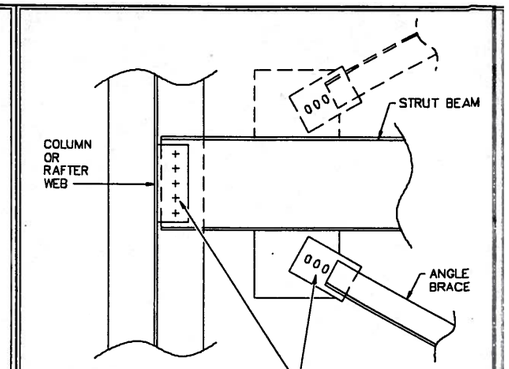

SEE SED BR33L1 AND BR33L2 FOR CONTINGENCY WELDS, IF BOLT HOLES DO NOT ALIGN.

REV. DATE:11/07/11	REV. NO. 01	BOLTED ANGLE BRACING INTERMEDIATE STRUT BEAMS
BR33N1		

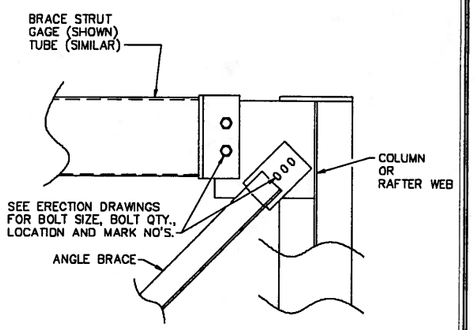

SEE SED BR33L1 AND BR33L2 FOR CONTINGENCY WELDS, IF BOLT HOLES DO NOT ALIGN.

REV. DATE:11/07/11	REV. NO. 01	BOLTED ANGLE BRACING AT EAVE/HAUNCH
BR33P1		

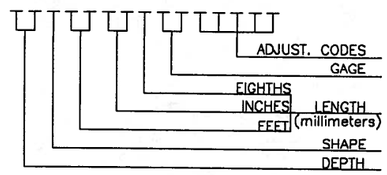

DEPTH	SHAPE	GAGE
07 = 7"	Z = ZEE	11 = 0.113
08 = 8 1/2"	C = CEE	12 = 0.098
10 = 10"	E = LOW EAVE STRUT	13 = 0.088
11 = 11 1/2"	H = HIGH EAVE STRUT	14 = 0.079
		15 = 0.073
		16 = 0.068
		17 = 0.060

REV. DATE:07/01/08	REV. NO. 00	SECONDARY PART MARK NUMBER COMMON GENERATED MARK NUMBERS
EN51B1		

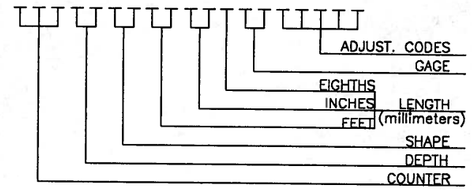

DEPTH	SHAPE	GAGE
07 = 7"	ZS = ZEE	11 = 0.113
08 = 8 1/2"	CS = CEE	12 = 0.098
10 = 10"	ES = LOW EAVE STRUT	13 = 0.088
11 = 11 1/2"	HS = HIGH EAVE STRUT	14 = 0.079
	BB = BACK TO BACK CEE	15 = 0.073
	FB = FACE TO BACK CEE	16 = 0.068
	FF = FACE TO FACE CEE	17 = 0.060

REV. DATE:07/01/08	REV. NO. 00	SPECIAL SECONDARY PART MARK KEY COMMON GENERATED MARK NUMBERS
EN51B2		

LARRY L. BOOZER
LICENSE
No. 44236
STATE OF FLORIDA
PROFESSIONAL ENGINEER

11/13/12

Larry L. Boozer, P.E. No. 44236
VP Buildings, Inc.
7031 Albert Pick Rd., Suite 200
Greensboro, NC 27409

PERMIT SET- For Building Dept. Approval

1. UNLESS NOTED, USE 1/2 X 1 1/2 A-325 SNUG TIGHTENED BOLTS FOR ALL SECONDARY CONNECTIONS.
2. FLANGE BRACES ARE AN INTEGRAL PART OF THE STABILITY OF THE STRUCTURAL SYSTEM AND MUST BE PROPERLY INSTALLED PRIOR TO ERECTION OF WALL AND ROOF SHEETS.
3. REMOVAL OR ALTERATION OF ANY COMPONENT IS PROHIBITED.

THE VP ENGINEER'S SEAL APPLIES ONLY TO THE WORK PRODUCT OF VP AND DESIGN AND PERFORMANCE REQUIREMENTS SPECIFIED BY VP. THE VP ENGINEER'S SEAL DOES NOT APPLY TO THE PERFORMANCE OR DESIGN OF ANY OTHER PRODUCT OR COMPONENT FURNISHED BY VP EXCEPT TO ANY DESIGN OR PERFORMANCE REQUIREMENTS SPECIFIED BY VP.

THIS DRAWING, INCLUDING THE INFORMATION HEREON, REMAINS THE PROPERTY OF VP BUILDINGS. IT IS PROVIDED SOLELY FOR ERECTING THE BUILDING DESCRIBED IN THE APPLICABLE PURCHASE ORDER AND SHALL NOT BE MODIFIED, REPRODUCED OR USED FOR ANY OTHER PURPOSE WITHOUT PRIOR WRITTEN APPROVAL OF VP BUILDINGS.

THE GENERAL CONTRACTOR AND/OR ERECTOR IS SOLELY RESPONSIBLE FOR ACCURATE GOOD QUALITY WORKMANSHIP IN ERECTING THIS BUILDING IN ACCORDANCE WITH THIS DRAWING, DETAILS REFERENCED IN THIS DRAWING, ALL APPLICABLE VP BUILDINGS ERECTION GUIDES, AND INDUSTRY STANDARDS PERTAINING TO PROPER ERECTION, INCLUDING THE CORRECT USE OF TEMPORARY BRACING.

VP Buildings
3200 Players Club Circle Memphis TN 38125

REV	DATE	BY	DESCRIPTION

NTS

11/1/2012 12:13:27

WALL SECONDARY SED'S

BUILDER	Lemartec Eng. & Const. Corp.
CUSTOMER	Florida Power and Light
LOCATION	Homestead, Florida
PROJECT	FPL-Dry Storage Building
BUILDER'S PO#	2706-12158

VP BUILDINGS
VARCO PRUDEN

VPC VERSION: 2012.3

JOB #	12-23530
DATE	11/7/2012
DRAWN/CHECK	VPC / JLB
PAGE	

FILENAME: 2706-12158-FPL-Dry Storage Building copy 2 from TW

A Division of Riverbrace Buildings North America, Inc.

ERECTION DRAWING PART MARK

R
1 W 1 B 3

- BAY NUMBER
- ROOF(R)/WALL(W) NUMBER
- BUILDING SHAPE

THE BAY/BUNDLE CODE IDENTIFIES THE BUILDING ROOF/WALL PLANE AND BAY

REV. DATE:07/01/08 | REV. NO. 00
EN51B3 — SECONDARY BUNDLE LOCATION KEY
ALL SECONDARY DEPTHS

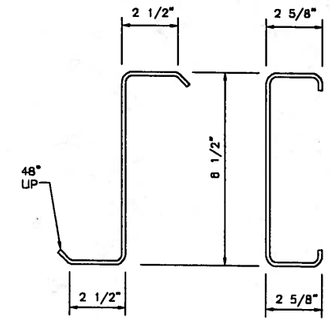

REV. DATE:07/01/08 | REV. NO. 00
EN53F1 — PURLIN AND GIRT SIZES
8 1/2" 216mm

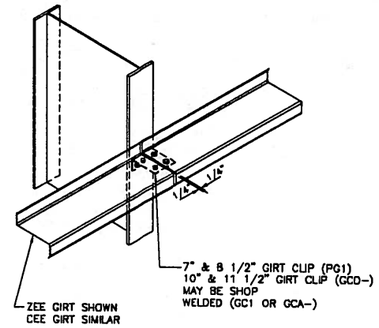

REV. DATE:07/01/08 | REV. NO. 00
WS01G2 — GIRT CONN. AT COLUMN
DUTSET SIMPLE GIRTS

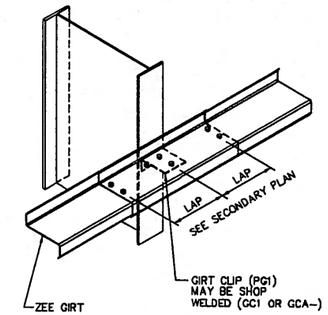

7" & 8 1/2" GIRT

REV. DATE:07/20/11 | REV. NO. 01
WS01G3 — GIRT CONN. AT COLUMN
OUTSET CONTINUOUS GIRT

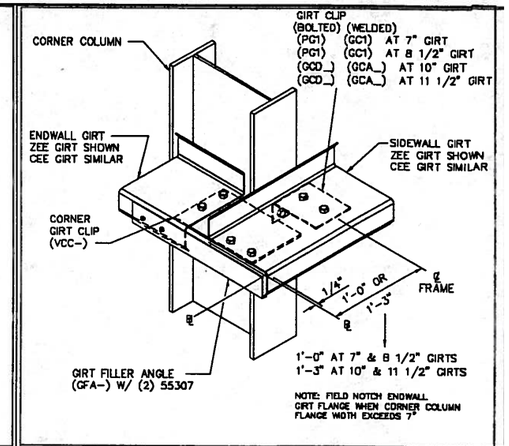

REV. DATE:11/08/11 | REV. NO. 01
WS12A2 — GIRT CONN. AT CORNER COLUMN
ANY OUTSET GIRT AT EW, ANY GIRT AT SW

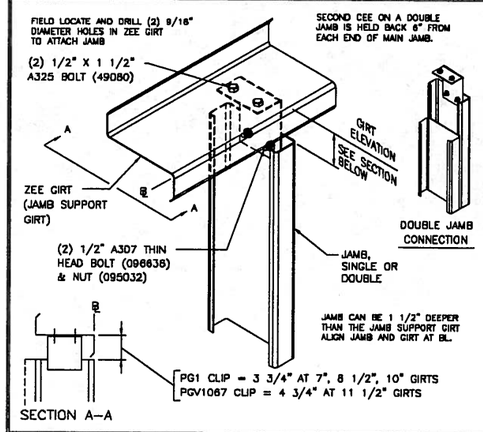

REV. DATE:07/01/08 | REV. NO. 00
WS20B2 — JAMB TO GIRT
SINGLE OR DOUBLE JAMB, ANY ZEE GIRT

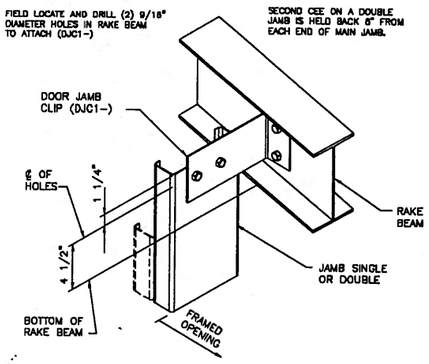

REV. DATE:07/01/08 | REV. NO. 00
WS20B5 — JAMB TO RAKE BEAM
ANY JAMB, OUTSET ENDWALL

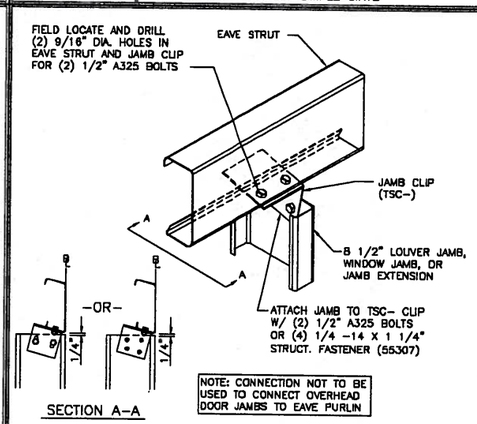

REV. DATE:07/01/08 | REV. NO. 00
WS20B6 — JAMB EXTENSION TO EAVE STRUT
LOW EAVE STRUT

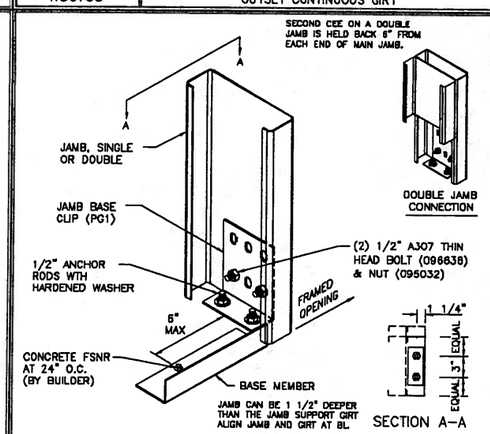

REV. DATE:07/01/08 | REV. NO. 00
WS20B8 — JAMB BASE ATTACHMENT
SINGLE OR DOUBLE JAMB

GIRT TO JAMB CLIP		JAMB DEPTH			
		7"	8 1/2"	10"	11 1/2"
GIRT DEPTH	7"	JTG3	JTG6		
	8 1/2"		JTG1	JTG5	
	10"			JTG4	JTG2
	11 1/2"				JTG2

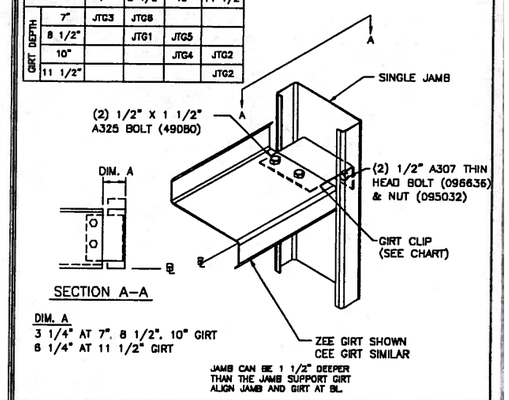

REV. DATE:08/28/10 | REV. NO. 01
WS20F2 — GIRT TO JAMB
SINGLE JAMB

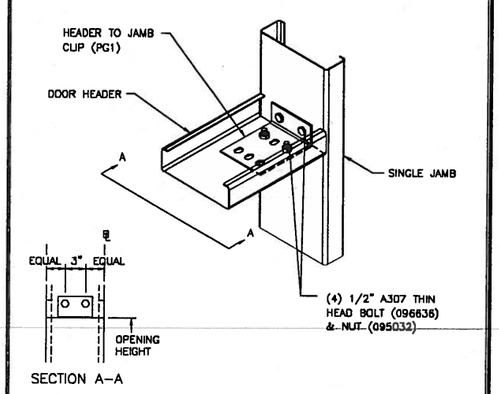

REV. DATE:07/01/08 | REV. NO. 00
WS20F9 — HEADER TO JAMB
ANY HEADER, ANY SINGLE JAMB

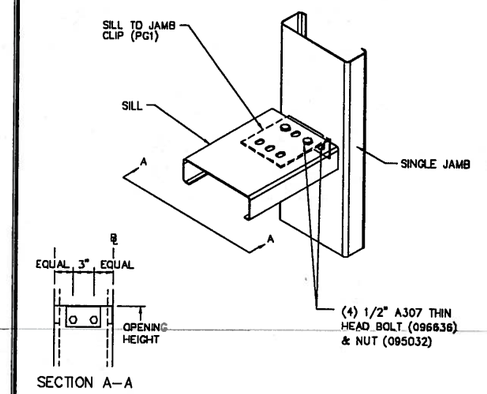

REV. DATE:07/01/11 | REV. NO. 00
WS20FB — SILL TO JAMB
ANY SILL, ANY SINGLE JAMB

LARRY L. BOOZER
LICENSE
No. 44236
STATE OF FLORIDA
PROFESSIONAL ENGINEER

11/13/12

Larry L. Boozer, P.E. No. 44236
VP Buildings, Inc.
7031 Albert Pick Rd., Suite 200
Greensboro, NC 27409

PERMIT SET- For Building Dept. Approval

1. UNLESS NOTED, USE 1/2 X 1 1/2 A-325 SNUG TIGHTENED BOLTS FOR ALL SECONDARY CONNECTIONS.
2. FLANGE BRACES ARE AN INTEGRAL PART OF THE STABILITY OF THE STRUCTURAL SYSTEM AND MUST BE PROPERLY INSTALLED PRIOR TO ERECTION OF WALL AND ROOF SHEETS.
3. REMOVAL OR ALTERATION OF ANY COMPONENT IS PROHIBITED.

THE VP ENGINEER'S SEAL APPLIES ONLY TO THE WORK PRODUCT OF VP AND DESIGN AND PERFORMANCE REQUIREMENTS SPECIFIED BY VP. THE VP ENGINEER'S SEAL DOES NOT APPLY TO THE PERFORMANCE OR DESIGN OF ANY OTHER PRODUCT OR COMPONENT FURNISHED BY VP EXCEPT TO ANY DESIGN OR PERFORMANCE REQUIREMENTS SPECIFIED BY VP.

THIS DRAWING, INCLUDING THE INFORMATION HEREON, REMAINS THE PROPERTY OF VP BUILDINGS. IT IS PROVIDED SOLELY FOR ERECTING THE BUILDING DESCRIBED IN THE APPLICABLE PURCHASE ORDER AND SHALL NOT BE MODIFIED, REPRODUCED OR USED FOR ANY OTHER PURPOSE WITHOUT PRIOR WRITTEN APPROVAL OF VP BUILDINGS.

THE GENERAL CONTRACTOR AND/OR ERECTOR IS SOLELY RESPONSIBLE FOR ACCURATE GOOD QUALITY WORKMANSHIP IN ERECTING THIS BUILDING IN ACCORDANCE WITH THIS DRAWING, DETAILS REFERENCED IN THIS DRAWING, ALL APPLICABLE VP BUILDINGS ERECTION GUIDES, AND INDUSTRY STANDARDS PERTAINING TO PROPER ERECTION, INCLUDING THE CORRECT USE OF TEMPORARY BRACING.

VP Buildings
3200 Players Club Circle Memphis TN 38125

REV	DATE	BY	DESCRIPTION

NTS

11/1/2012 12:13:28

WALL SECONDARY SED'S

BUILDER	Lemartec Eng. & Const. Corp.
CUSTOMER	Florida Power and Light
LOCATION	Homestead, Florida
PROJECT	FPL-Dry Storage Building
BUILDER'S PO#	2706-12158
FILENAME	2706-12158-FPL-Dry Storage Building copy 2 from VP

VP BUILDINGS
VARCO PRUDEN
VPC VERSION 2012.3

JOB #	12-23530
DATE	11/7/2012
DRAWN/CHECK	VPC / JLB
PAGE	

Division of Riverstone Buildings North America, Inc.

Covering Schedule

Id	Qty	Length	Type	Gage	OP	Fin.	Color	Direction
#8	24	24'-2 3/4"	PR	24	1	K	TD	Left to Right
#9	24	3'-4"	PR	24	3	K	TD	Left to Right
#10	24	24'-2 3/4"	PR	24	1	K	TD	Right to Left

Oper. Code:1=SQ,SQ
Oper. Code:3=SQ,SQ
Finish:K=KXL (Kynar)
Color:TD=Standard Color

Trim Schedule

Id	Parts	Color	Details
T1	RRC1B,SPC1B	Cool Dark Bronze	RC38C4
T2	BS1,FPRF1,GGC2,MCC1	Cool Dark Bronze	RC38N1
T3	BS1,FPRF1,GGC2,MCC1	Cool Dark Bronze	RC38N1

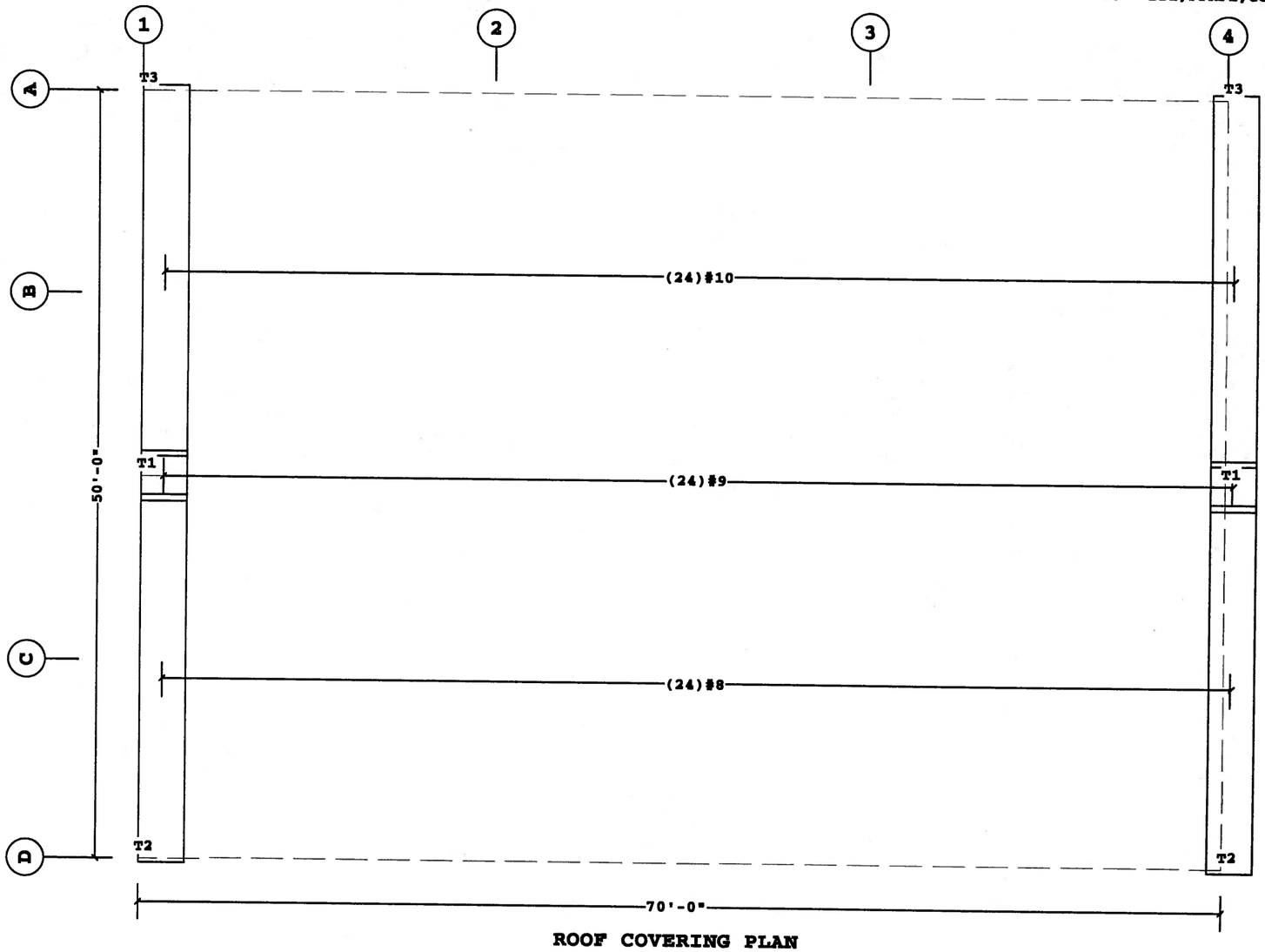

ROOF COVERING PLAN

Fastener Schedule

Part	Discription
Roof Struct 1 1/4	(T-2) #12-14 x 1 1/4", 5/16" Hex Hd, SS Cap w/Washer
0097584-105	(T-2) #12-14 x 1 1/4", 5/16" Hex Hd, SS Cap w/Washer
Roof Stitch 7/8 Si	(T-1) 1/4-14 x 7/8", 5/16" Hex Hd, SS Cap w/Washer

- The roof panels on this project has been detailed for a UL90 rating Construction #64 or 253
- (Field Repair Fastener)

(1 bags) #55308 #17-14x1" S.S. Roof Fastener

☐ Dimension Key
Shape Name = Dry Stge Building

Larry L. Boozer, P.E. No. 44236
VP Buildings, Inc.
7031 Albert Pick Rd., Suite 200
Greensboro, NC 27409
11/13/12

Larry L. Boozer, P.E. No. 44236
VP Buildings, Inc.
7031 Albert Pick Rd., Suite 200
Greensboro, NC 27409

PERMIT SET- For Building Dept. Approval

1. PRE-DRILLING 1/8 DIAMETER HOLES FOR STRUCTURAL FASTENERS MAY BE REQUIRED FOR HEAVY GAGE NESTED ZEE's AND/OR FASTENERS TO STRUCTURAL BEAMS
2. STEEL PANELS ARE AN INTEGRAL PART OF THE STRUCTURAL SYSTEM. REMOVAL OR ALTERATION WITHOUT PRIOR AUTHORIZATION IS PROHIBITED.
3. PANELS SHOWN WITH A LENGTH LESS THAN 5 FT MAY HAVE TO BE FIELD CUT.
4. SEE JOB DETAILS FOR COVERING AND TRIM FASTENER SPECIFICATION.

THE VP ENGINEER'S SEAL APPLIES ONLY TO THE WORK PRODUCT OF VP AND DESIGN AND PERFORMANCE REQUIREMENTS SPECIFIED BY VP. THE VP ENGINEER'S SEAL DOES NOT APPLY TO THE PERFORMANCE OR DESIGN OF ANY OTHER PRODUCT OR COMPONENT FURNISHED BY VP EXCEPT TO ANY DESIGN OR PERFORMANCE REQUIREMENTS SPECIFIED BY VP.

THIS DRAWING, INCLUDING THE INFORMATION HEREON, REMAINS THE PROPERTY OF VP BUILDINGS. IT IS PROVIDED SOLELY FOR ERECTING THE BUILDING DESCRIBED IN THE APPLICABLE PURCHASE ORDER AND SHALL NOT BE MODIFIED, REPRODUCED OR USED FOR ANY OTHER PURPOSE WITHOUT PRIOR WRITTEN APPROVAL OF VP BUILDINGS.

THE GENERAL CONTRACTOR AND/OR ERECTOR IS SOLELY RESPONSIBLE FOR ACCURATE GOOD QUALITY WORKMANSHIP IN ERECTING THIS BUILDING IN ACCORDANCE WITH THIS DRAWING, DETAILS REFERENCED IN THIS DRAWING, ALL APPLICABLE VP BUILDINGS ERECTION GUIDES, AND INDUSTRY STANDARDS PERTAINING TO PROPER ERECTION, INCLUDING THE CORRECT USE OF TEMPORARY BRACING.

VP Buildings
3200 Players Club Circle Memphis TN 38125

REV	DATE	BY	DESCRIPTION

NTS

11/1/2012 12:13:31

ROOF COVERING PLAN

BUILDER	Lemartec Eng. & Const. Corp.
CUSTOMER	Florida Power and Light
LOCATION	Homestead, Florida
PROJECT	FPL-Dry Storage Building
BUILDER'S PO#	2706-12158

VP BUILDINGS
VARCO PRUDEN

VPC VERSION: 2012.3

JOB #	12-23530
DATE	11/7/2012
DRAWN/CHECK	VPC / JLB
PAGE	

FILENAME: 2706-12158-FPL-Dry Storage Building copy 2 from TW

Copyright © BuildSoft Buildings North America, Inc.

Covering Schedule

Id	Qty	Type	Start Length	Gage	OP	Fin.	Color	Increment	Direction
#1	9	PR	17'-9"	24	1	K	TD	-4 1/2"	Left to Right
#2	9	PR	17'-9"	24	1	K	TD	-4 1/2"	Right to Left

Oper. Code:1=SQ,SQ
Finish:K=KXL (Kynar)
Color:TD=Standard Color

Fastener Schedule

Part	Discription
Roof Struct 1 1/4	(T-2) #12-14 x 1 1/4", 5/16" Hex Hd, SS Cap w/Washer
0097584-105	(T-2) #12-14 x 1 1/4", 5/16" Hex Hd, SS Cap w/Washer
Roof Stitch 7/8 Si	(T-1) 1/4-14 x 7/8", 5/16" Hex Hd, SS Cap w/Washer

Trim Schedule

Id	Parts	Color	Details
T1	(2)RKF20,RKF16	Cool Dark Bronze	RC30B1,RS10R1
T2	(2)BA125,(5)BT10	Cool Dark Bronze	EN52A1,RC00A1,WC01AB,WC04G6
T3	DFT05,JT05	Cool Dark Bronze	WC24A1
T4	DFT05,HTS03	Cool Dark Bronze	WC24A2
T5	TDFH03	Cool Dark Bronze	WC24A4
T6	CT16	Match Wall Color	WC20A1

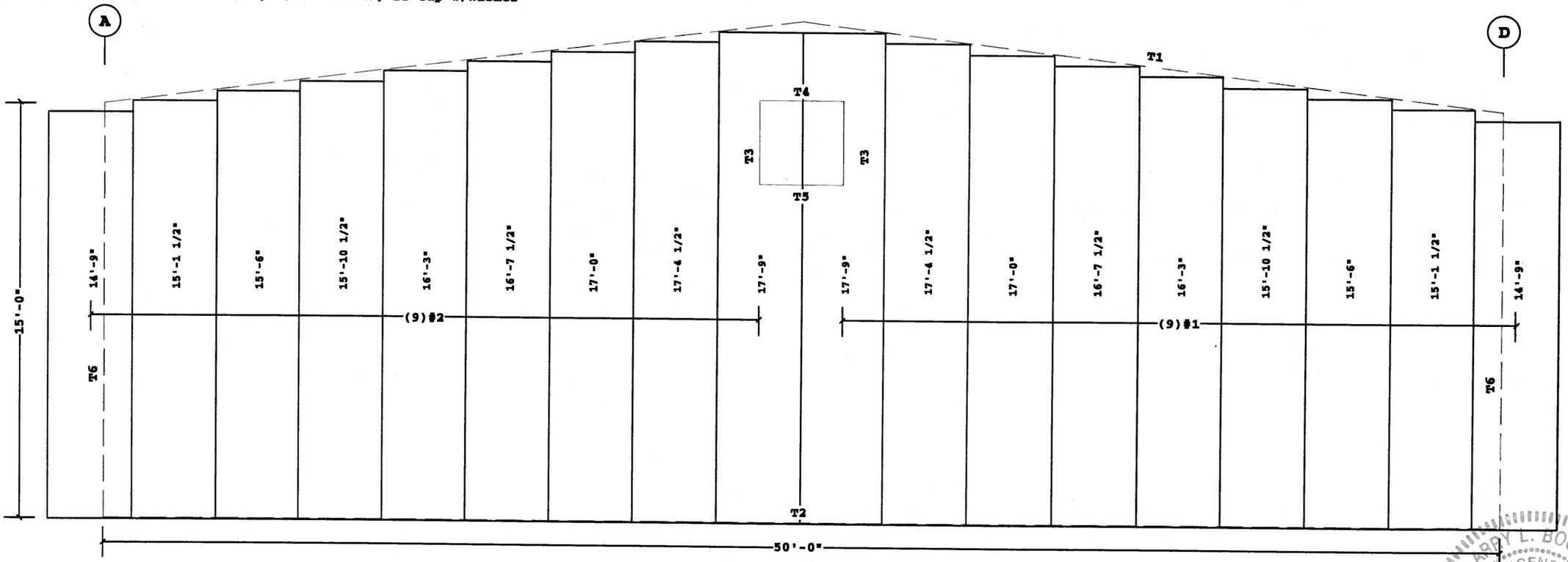

COVERING ELEVATION AT 1

LARRY L. BOOZER
LICENSE
No. 44236
STATE OF FLORIDA
PROFESSIONAL ENGINEER

11/13/12

Larry L. Boozer, P.E. No. 44236
VP Buildings, Inc.
7031 Albert Pick Rd., Suite 200
Greensboro, NC 27409

PERMIT SET- For Building Dept. Approval

Shape Name = Dry Stge Building, Wall = 1

1. PRE-DRILLING 1/8 DIAMETER HOLES FOR STRUCTURAL FASTENERS MAY BE REQUIRED FOR HEAVY GAGE NESTED ZEE's AND/OR FASTENERS TO STRUCTURAL BEAMS
2. STEEL PANELS ARE AN INTEGRAL PART OF THE STRUCTURAL SYSTEM. REMOVAL OR ALTERATION WITHOUT PRIOR AUTHORIZATION IS PROHIBITED.
3. PANELS SHOWN WITH A LENGTH LESS THAN 5 FT MAY HAVE TO BE FIELD CUT.
4. SEE JOB DETAILS FOR COVERING AND TRIM FASTENER SPECIFICATION.

THE VP ENGINEER'S SEAL APPLIES ONLY TO THE WORK PRODUCT OF VP AND DESIGN AND PERFORMANCE REQUIREMENTS SPECIFIED BY VP. THE VP ENGINEER'S SEAL DOES NOT APPLY TO THE PERFORMANCE OR DESIGN OF ANY OTHER PRODUCT OR COMPONENT FURNISHED BY VP EXCEPT TO ANY DESIGN OR PERFORMANCE REQUIREMENTS SPECIFIED BY VP.

THIS DRAWING, INCLUDING THE INFORMATION HEREON, REMAINS THE PROPERTY OF VP BUILDINGS. IT IS PROVIDED SOLELY FOR ERECTING THE BUILDING DESCRIBED IN THE APPLICABLE PURCHASE ORDER AND SHALL NOT BE MODIFIED, REPRODUCED OR USED FOR ANY OTHER PURPOSE WITHOUT PRIOR WRITTEN APPROVAL OF VP BUILDINGS.

THE GENERAL CONTRACTOR AND/OR ERECTOR IS SOLELY RESPONSIBLE FOR ACCURATE GOOD QUALITY WORKMANSHIP IN ERECTING THIS BUILDING IN ACCORDANCE WITH THIS DRAWING, DETAILS REFERENCED IN THIS DRAWING, ALL APPLICABLE VP BUILDINGS ERECTION GUIDES, AND INDUSTRY STANDARDS PERTAINING TO PROPER ERECTION, INCLUDING THE CORRECT USE OF TEMPORARY BRACING.

VP Buildings
3200 Players Club Circle Memphis TN 38125

REV	DATE	BY	DESCRIPTION

NTS

11/1/2012 12:13:33

COVERING ELEVATION AT 1

BUILDER	Lemartec Eng. & Const. Corp.
CUSTOMER	Florida Power and Light
LOCATION	Homestead, Florida
PROJECT	FPL-Dry Storage Building
BUILDER'S PO#	2706-12158
FILENAME	2706-12158-FPL-Dry Storage Building copy 2 from TW

VP BUILDINGS
VARCO PRUDEN

VPC VERSION: 2012.3

JOB #	12-23530
DATE	11/7/2012
DRAWN/CHECK	VPC / JLB
PAGE	

© Subsidiary of Berkshire Hathaway Buildings North America, Inc.

Covering Schedule

Id	Qty	Type	Start	Length	Gage	OP	Fin.	Color	Direction
#3	18	PR	14'-11 7/8"		24	1	K	TD	Left to Right
#4	5	PR	2'-11 3/8"		24	1	K	TD	Left to Right
#5	1	PR	14'-11 3/8"		24	1	K	TD	Left to Right

Oper. Code:1=SQ,SQ
Finish:K=KXL (Kynar)
Color:TD=Standard Color

Fastener Schedule

Part	Discription
Roof Struct 1 1/4 (T-2)	#12-14 x 1 1/4", 5/16" Hex Hd, SS Cap w/Washer
Roof Stitch 7/8 S(T-1)	1/4-14 x 7/8", 5/16" Hex Hd, SS Cap w/Washer

Trim Schedule

Id	Parts	Color	Details
T1	(3)EG202,EG122,(7)PCA10A,(25)STR2	Cool Dark Bronze	RC03B1,RC04B1,RC32B1,RC39A2, WC04G6,WC11F1
T2	CT16	Match Wall Color	WC20A1
T3	DFT10,JT07	Cool Dark Bronze	WC24A1
T4	DFT05,HTS05	Cool Dark Bronze	WC24A2
T5	(1.7)BA125,(5)BT10	Cool Dark Bronze	EN52A1,RC00A1,WC01AB,WC04G6
T6	DFT12,JT12	Cool Dark Bronze	WC24A1
T7	DFT10,HTS10	Cool Dark Bronze	WC24A2
T8	DFT05,JT05	Cool Dark Bronze	WC24A1
T9	DFT05,HTS03	Cool Dark Bronze	WC24A2
T10	TDFH03	Cool Dark Bronze	WC24A4
T11	5CE75,(2)CP510,DN1,(3)DST1	Match Wall Color	RC38P1

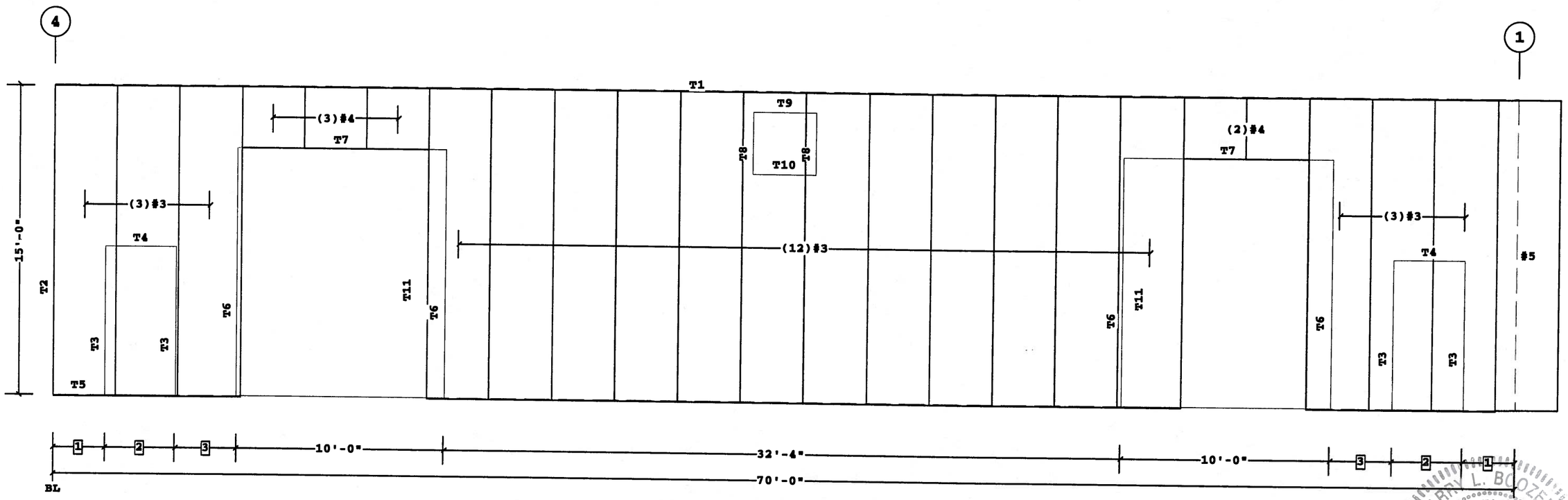

COVERING ELEVATION AT A

3 2'-11 1/2"
2 3'-4 1/2"
1 2'-6"
☐ Dimension Key

LARRY L. BOOZER LICENSE No. 44236 STATE OF FLORIDA PROFESSIONAL ENGINEER

11/1/12

Larry L. Boozer, PE, No. 44236
VP Buildings, Inc.
7031 Albert Pick Rd., Suite 200
Greensboro, NC 27409

PERMIT SET- For Building Dept. Approval

1. PRE-DRILLING 1/8 DIAMETER HOLES FOR STRUCTURAL FASTENERS MAY BE REQUIRED FOR HEAVY GAGE NESTED ZEE's AND/OR FASTENERS TO STRUCTURAL BEAMS
2. STEEL PANELS ARE AN INTEGRAL PART OF THE STRUCTURAL SYSTEM. REMOVAL OR ALTERATION WITHOUT PRIOR AUTHORIZATION IS PROHIBITED.
3. PANELS SHOWN WITH A LENGTH LESS THAN 5 FT MAY HAVE TO BE FIELD CUT.
4. SEE JOB DETAILS FOR COVERING AND TRIM FASTENER SPECIFICATION.

THE VP ENGINEER'S SEAL APPLIES ONLY TO THE WORK PRODUCT OF VP AND DESIGN AND PERFORMANCE REQUIREMENTS SPECIFIED BY VP. THE VP ENGINEER'S SEAL DOES NOT APPLY TO THE PERFORMANCE OR DESIGN OF ANY OTHER PRODUCT OR COMPONENT FURNISHED BY VP EXCEPT TO ANY DESIGN OR PERFORMANCE REQUIREMENTS SPECIFIED BY VP.

Shape Name = Dry Stge Building, Wall = 2

THIS DRAWING, INCLUDING THE INFORMATION HEREON, REMAINS THE PROPERTY OF VP BUILDINGS. IT IS PROVIDED SOLELY FOR ERECTING THE BUILDING DESCRIBED IN THE APPLICABLE PURCHASE ORDER AND SHALL NOT BE MODIFIED, REPRODUCED OR USED FOR ANY OTHER PURPOSE WITHOUT PRIOR WRITTEN APPROVAL OF VP BUILDINGS.

THE GENERAL CONTRACTOR AND/OR ERECTOR IS SOLELY RESPONSIBLE FOR ACCURATE GOOD QUALITY WORKMANSHIP IN ERECTING THIS BUILDING IN ACCORDANCE WITH THIS DRAWING, DETAILS REFERENCED IN THIS DRAWING, ALL APPLICABLE VP BUILDINGS ERECTION GUIDES, AND INDUSTRY STANDARDS PERTAINING TO PROPER ERECTION, INCLUDING THE CORRECT USE OF TEMPORARY BRACING.

VP Buildings
3200 Players Club Circle Memphis TN 38125

REV	DATE	BY	DESCRIPTION

NTS

11/1/2012 12:13:34

COVERING ELEVATION AT A

BUILDER: Lemartec Eng. & Const. Corp.
CUSTOMER: Florida Power and Light
LOCATION: Homestead, Florida
PROJECT: FPL-Dry Storage Building
BUILDER'S PO#: 2706-12158
FILENAME: 2706-12158-FPL-Dry Storage Building copy 2 from rw

VP BUILDINGS (ARCO PRUDEN)
VPC VERSION: 2012.3

JOB #: 12-23530
DATE: 11/7/2012
DRAWN/CHECK: VPC / JLB
PAGE

Subsidiary of Berkshire Hathaway Buildings North America, Inc.

Covering Schedule

Id	Qty	Type	Start Length	Gage	OP	Fin.	Color	Increment	Direction
#6	9	PR	17'-9"	24	1	K	TD	-4 1/2"	Left to Right
#7	9	PR	17'-9"	24	1	K	TD	-4 1/2"	Right to Left

Oper. Code:1=SQ,SQ
Finish:K=KXL (Kynar)
Color:TD=Standard Color

Fastener Schedule

Part	Discription
Roof Struct 1 1/4	(T-2) #12-14 x 1 1/4", 5/16" Hex Hd, SS Cap w/Washer
0097584-105	(T-2) #12-14 x 1 1/4", 5/16" Hex Hd, SS Cap w/Washer
Roof Stitch 7/8 S	(T-1) 1/4-14 x 7/8", 5/16" Hex Hd, SS Cap w/Washer

Trim Schedule

Id	Parts	Color	Details
T1	(2)RKF20,RKF16	Cool Dark Bronze	RC30B1,RS10R1
T2	(2)BA125,(5)BT10	Cool Dark Bronze	EN52A1,RC00A1,WC01AB,WC04G6
T3	DFT05,JT05	Cool Dark Bronze	WC24A1
T4	DFT05,HTS03	Cool Dark Bronze	WC24A2
T5	TDFH03	Cool Dark Bronze	WC24A4
T6	CT16	Match Wall Color	WC20A1

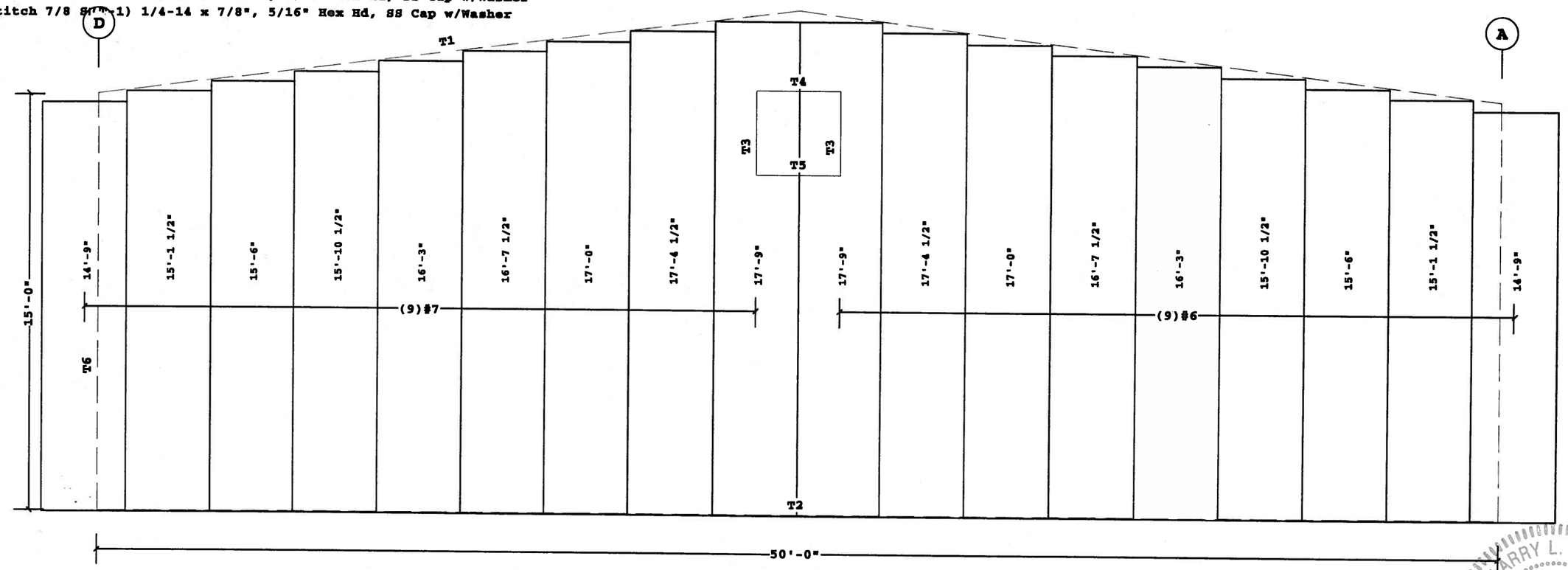

COVERING ELEVATION AT 4

LARRY L. BOOZER
LICENSE
No. 44236
STATE OF FLORIDA
PROFESSIONAL ENGINEER

Larry L. Boozer, P.E. No. 44236
VP Buildings, Inc.
7031 Albert Pick Rd. Suite 200
Greensboro, NC 27409

PERMIT SET- For Building Dept. Approval

Shape Name = Dry Stge Building, Wall = 3

1. PRE-DRILLING 1/8 DIAMETER HOLES FOR STRUCTURAL FASTENERS MAY BE REQUIRED FOR HEAVY GAGE NESTED ZEE's AND/OR FASTENERS TO STRUCTURAL BEAMS
2. STEEL PANELS ARE AN INTEGRAL PART OF THE STRUCTURAL SYSTEM. REMOVAL OR ALTERATION WITHOUT PRIOR AUTHORIZATION IS PROHIBITED.
3. PANELS SHOWN WITH A LENGTH LESS THAN 5 FT MAY HAVE TO BE FIELD CUT.
4. SEE JOB DETAILS FOR COVERING AND TRIM FASTENER SPECIFICATION.

THE VP ENGINEER'S SEAL APPLIES ONLY TO THE WORK PRODUCT OF VP AND DESIGN AND PERFORMANCE REQUIREMENTS SPECIFIED BY VP. THE VP ENGINEER'S SEAL DOES NOT APPLY TO THE PERFORMANCE OR DESIGN OF ANY OTHER PRODUCT OR COMPONENT FURNISHED BY VP EXCEPT TO ANY DESIGN OR PERFORMANCE REQUIREMENTS SPECIFIED BY VP.

THIS DRAWING, INCLUDING THE INFORMATION HEREON, REMAINS THE PROPERTY OF VP BUILDINGS. IT IS PROVIDED SOLELY FOR ERECTING THE BUILDING DESCRIBED IN THE APPLICABLE PURCHASE ORDER AND SHALL NOT BE MODIFIED, REPRODUCED OR USED FOR ANY OTHER PURPOSE WITHOUT PRIOR WRITTEN APPROVAL OF VP BUILDINGS.

THE GENERAL CONTRACTOR AND/OR ERECTOR IS SOLELY RESPONSIBLE FOR ACCURATE GOOD QUALITY WORKMANSHIP IN ERECTING THIS BUILDING IN ACCORDANCE WITH THIS DRAWING, DETAILS REFERENCED IN THIS DRAWING, ALL APPLICABLE VP BUILDINGS ERECTION GUIDES, AND INDUSTRY STANDARDS PERTAINING TO PROPER ERECTION, INCLUDING THE CORRECT USE OF TEMPORARY BRACING.

VP Buildings
3200 Players Club Circle Memphis TN 38125

REV	DATE	BY	DESCRIPTION

NTS

11/1/2012 12:13:35

COVERING ELEVATION AT 4

BUILDER	Lemartec Eng. & Const. Corp.
CUSTOMER	Florida Power and Light
LOCATION	Homestead, Florida
PROJECT	FPL-Dry Storage Building
BUILDER'S PO#	2706-12158

VP BUILDINGS
VANCO PRUDEN

VPC VERSION: 2012.3

JOB # 12-23530
DATE 11/7/2012
DRAWN/CHECK VPC / JLB
PAGE

FILENAME: 2706-12158-FPL-Dry Storage Building copy 2 from rw

Copyright By VP Buildings North America, Inc.

Covering Schedule

Id	Qty	Type	Start	Length	Gage	OP	Fin.	Color	Direction
#11	24	PR	14'-11 7/8"		24	1	K	TD	Left to Right

Oper. Code:1=SQ,SQ
Finish:K=KXL (Kynar)
Color:TD=Standard Color

Fastener Schedule

Part	Discription
Roof Struct 1 1/4 (T-2)	#12-14 x 1 1/4", 5/16" Hex Hd, SS Cap w/Washer
Roof Stitch 7/8 S(T-1)	1/4-14 x 7/8", 5/16" Hex Hd, SS Cap w/Washer

Trim Schedule

Id	Parts	Color	Details
T1	(3)EG202,EG122,(7)PCA10A,(25)STR2	Cool Dark Bronze	RC03B1,RC04B1,RC32B1,RC39A2, WC04G6,WC11F1
T2	(2.8)BA125,(7)BT10	Cool Dark Bronze	EN52A1,RC00A1,WC01AB,WC04G1
T3	DFT05,JT05	Cool Dark Bronze	WC24A1
T4	DFT05,HTS03	Cool Dark Bronze	WC24A2
T5	TDFH03	Cool Dark Bronze	WC24A4
T6	5CE75,(2)CP510,DN1,(3)DST1	Match Wall Color	RC38P1

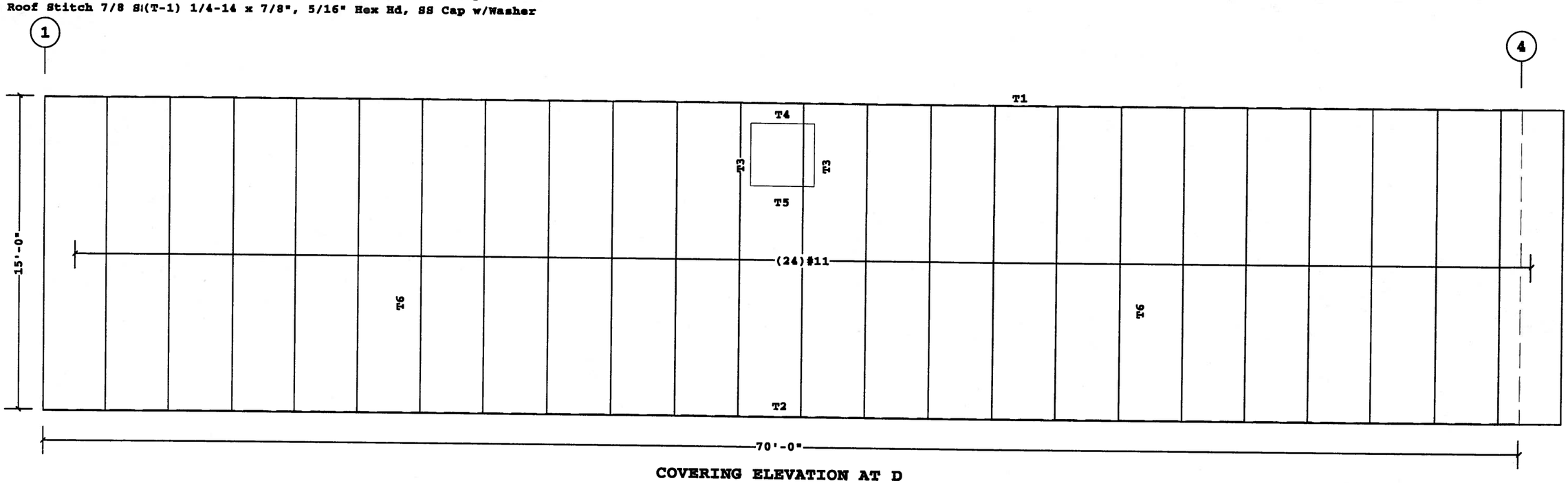

COVERING ELEVATION AT D

LARRY L. BOOZER
LICENSE
No. 44236
STATE OF FLORIDA
PROFESSIONAL ENGINEER

11/13/12

Larry L. Boozer, P.E. No. 44236
VP Buildings, Inc.
7031 Albert Pick Rd., Suite 200
Greensboro, NC 27409

PERMIT SET- For Building Dept. Approval

Shape Name = Dry Stge Building, Wall = 4

1. PRE-DRILLING 1/8 DIAMETER HOLES FOR STRUCTURAL FASTENERS MAY BE REQUIRED FOR HEAVY GAGE NESTED ZEE's AND/OR FASTENERS TO STRUCTURAL BEAMS
2. STEEL PANELS ARE AN INTEGRAL PART OF THE STRUCTURAL SYSTEM. REMOVAL OR ALTERATION WITHOUT PRIOR AUTHORIZATION IS PROHIBITED.
3. PANELS SHOWN WITH A LENGTH LESS THAN 5 FT MAY HAVE TO BE FIELD CUT.
4. SEE JOB DETAILS FOR COVERING AND TRIM FASTENER SPECIFICATION.

THE VP ENGINEER'S SEAL APPLIES ONLY TO THE WORK PRODUCT OF VP AND DESIGN AND PERFORMANCE REQUIREMENTS SPECIFIED BY VP. THE VP ENGINEER'S SEAL DOES NOT APPLY TO THE PERFORMANCE OR DESIGN OF ANY OTHER PRODUCT OR COMPONENT FURNISHED BY VP EXCEPT TO ANY DESIGN OR PERFORMANCE REQUIREMENTS SPECIFIED BY VP.

THIS DRAWING, INCLUDING THE INFORMATION HEREON, REMAINS THE PROPERTY OF VP BUILDINGS. IT IS PROVIDED SOLELY FOR ERECTING THE BUILDING DESCRIBED IN THE APPLICABLE PURCHASE ORDER AND SHALL NOT BE MODIFIED, REPRODUCED OR USED FOR ANY OTHER PURPOSE WITHOUT PRIOR WRITTEN APPROVAL OF VP BUILDINGS.

THE GENERAL CONTRACTOR AND/OR ERECTOR IS SOLELY RESPONSIBLE FOR ACCURATE GOOD QUALITY WORKMANSHIP IN ERECTING THIS BUILDING IN ACCORDANCE WITH THIS DRAWING, DETAILS REFERENCED IN THIS DRAWING, ALL APPLICABLE VP BUILDINGS ERECTION GUIDES, AND INDUSTRY STANDARDS PERTAINING TO PROPER ERECTION, INCLUDING THE CORRECT USE OF TEMPORARY BRACING.

VP Buildings
3200 Players Club Circle Memphis TN 38125

REV	DATE	BY	DESCRIPTION

NTS

11/1/2012 12:13:36

COVERING ELEVATION AT D

BUILDER	Lemartec Eng. & Const. Corp.
CUSTOMER	Florida Power and Light
LOCATION	Homestead, Florida
PROJECT	FPL-Dry Storage Building
BUILDER'S PO#	2706-12158
FILENAME:	2706-12158-FPL-Dry Storage Building copy 2 from TW

VP BUILDINGS
VARCO PRUDEN

VPC VERSION: 2012.3

JOB #	12-23530
DATE	11/7/2012
DRAWN/CHECK	VPC / JLB
PAGE	

Copyright, Butler Buildings North America, Inc.

F = FEET
I = INCHES
E = EIGHTHS
G = GAGE
O = OPERATION
C = FIN/COLOR

PANEL/COVERING
W 1 3 1 1 7 2 8 1 K T D
* F F I I E G G O C C C
LENGTH CODE

INSULATION
I 8 1 3 0 1 0 3 6 0 3 0 W V
* * F F F I I I I I I E C C
LENGTH WIDTH THK CODE

SECONDARY (STANDARD)
0 8 Z 1 9 1 1 4 1 7 - - - - -
* * * F F I I E G G * * * * *
DEPTH LENGTH SHAPE GAGE ADJUST.CODES

SECONDARY (SPECIAL)
0 0 1 0 8 Z 1 9 1 1 4 1 7 - - -
* * * * * * * F F I I E G G * * *
COUNTER DEPTH SHAPE LENGTH GAGE ADJUST CODES

ROD BRACING
0 3 R S 2 5 1 0
I E * * F F I I
DIA LENGTH

RS = THREADS BOTH ENDS
RT = THREADS ONE END - CLEVIS ONE END
RU = CLEVIS BOTH ENDS
RP = THREAD BOTH ENDS - NO HILLSIDES

CX*** = COLUMN (PLATE)
CGX*** = COLUMN (GAGE)
WCX*** = COLUMN (HOTROLL)

RBX*** = RAFTER (PLATE)
BGX*** = RAFTER (GAGE)
WRX*** = RAFTER (HOTROLL)
TRX*** = TRUSS RAFTER

ICX*** = INTERIOR COLUMN
PCX*** = PIPE COLUMN
TCX*** = TUBE COLUMN

EPX*** = ENDPOST (PLATE)
EGX*** = ENDPOST (GAGE)

CBX*** = CANOPY (PLATE)
CBX*** = PIGGYBACK CANOPY

DCC*** = 8 1/2" GAGE POST
DCE*** = 10" GAGE POST

REV. DATE:08/28/12 | REV. NO. 01
EN50B1 — MARK NUMBER KEY
COMMON GENERATED MARK NUMBERS

PR WALL PANEL MARK NO.: W F F I I E G G O C C C
LENGTH CODE
PR ROOF PANEL MARK NO.: R F F I I E G G O C C C
LENGTH CODE
PR RIDGE PANEL MARK NO.: P F F I I E G G O C C C
LENGTH CODE

F = FEET
I = INCHES
E = EIGHTHS
G = GAGE
O = OPERATION
C = FIN/COLOR

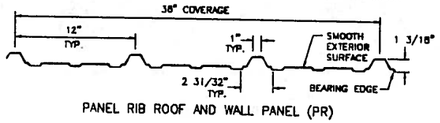

PANEL RIB ROOF AND WALL PANEL (PR)

RPR WALL PANEL MARK NO.: R R F F I I E G G O C C C
LENGTH CODE

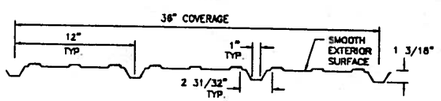

RPR WALL PANEL

REV. DATE:07/01/08 | REV. NO. 00
EN52A1 — PR ROOF & PR/RPR WALL PANELS

1. STANDARD ERECTION DETAILS (SED) SUPERSEDE SIMILAR DETAILS FOUND IN THE ERECTION GUIDES. REFER TO THE ERECTION GUIDES FOR OTHER DETAILS, INSTALLATION PROCEDURES AND ACCESSORIES NOT DESCRIBED IN THE SED'S.
2. ALL PANEL AND TRIM SURFACES MUST BE FREE OF DIRT AND OIL AT MASTIC AND SEALANT LOCATIONS.

REV. DATE:07/01/08 | REV. NO. 00
RC00A1 — NOTES

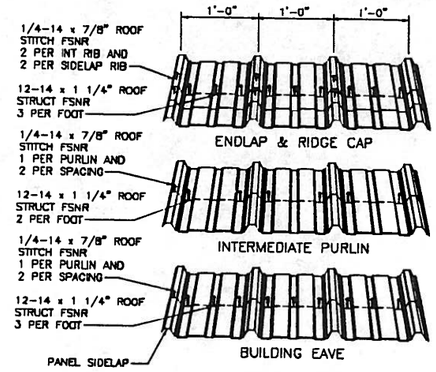

REV. DATE:07/01/08 | REV. NO. 00
RC04B3 — PANEL RIB ROOF FSNR PATTERN
U.L. 90 RATED

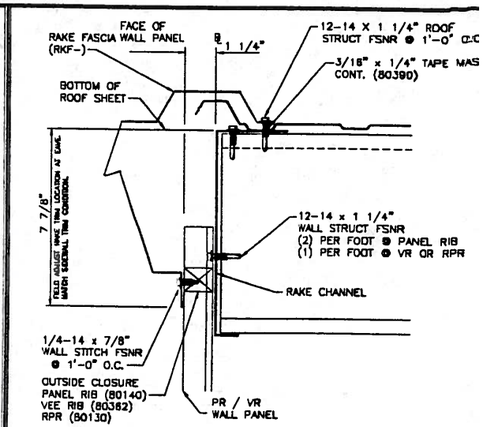

REV. DATE:07/01/08 | REV. NO. 00
RC30B1 — PANEL RIB ROOF RAKE TRIM
ALL PURLINS AT PR, VR OR RPR WALL THRU 2:12

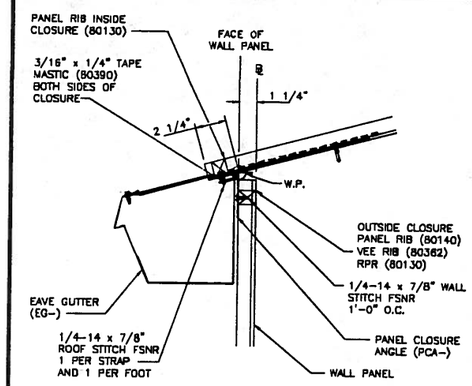

REV. DATE:07/01/08 | REV. NO. 00
RC32B1 — PANEL RIB W/ EAVE GUTTER
PR, VR OR RPR WALL

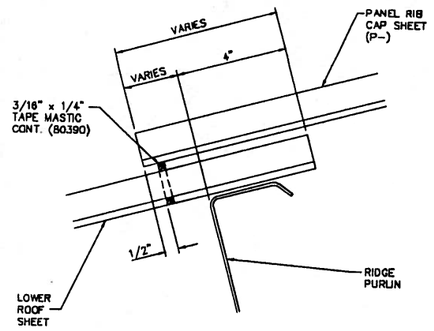

NOTE: SUBSTITUTE 3/16" x 7/8" TAPE MASTIC (80349) FOR MIAMI-DADE AND BROWARD COUNTY,FL REQUIREMENTS (NOA NO. 09-0402.21) (EXPIRES 03/07/2014)

REV. DATE:08/28/12 | REV. NO. 01
RC34B1 — PANEL RIB ROOF
RIDGE CAP ENDLAP

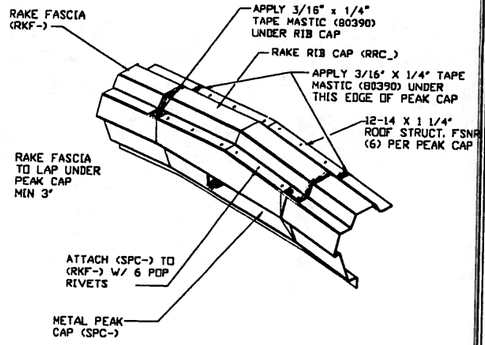

REV. DATE:07/01/08 | REV. NO. 00
RC38C4 — RAKE FASCIA
METAL PEAK CAP ATTACHMENT (P-RIB ROOF)

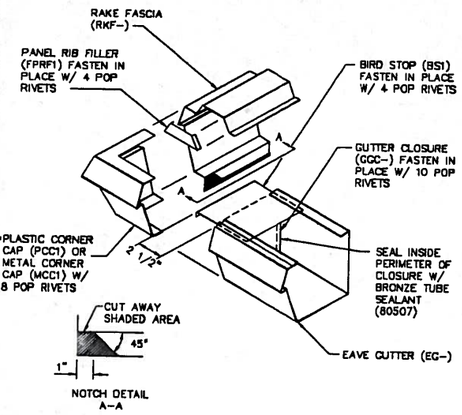

REV. DATE:11/15/10 | REV. NO. 01
RC38N1 — EAVE GUTTER CORNER ASSEMBLY
ALL SYSTEMS

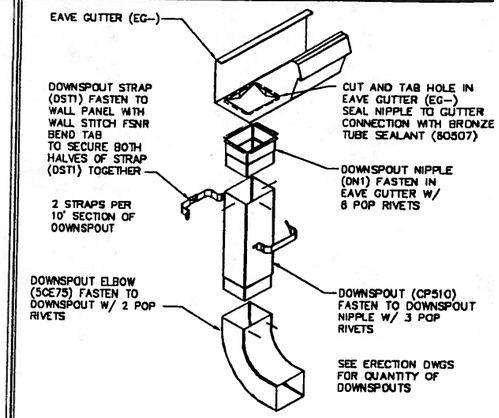

REV. DATE:08/10/12 | REV. NO. 02
RC38P1 — DOWNSPOUT ASSEMBLY
ALL SYSTEMS

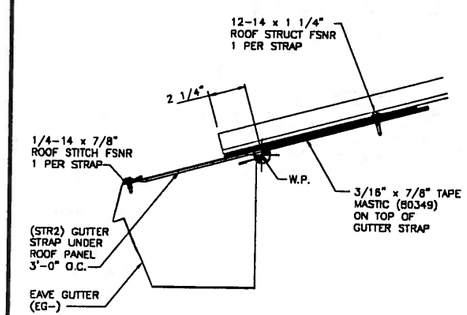

REV. DATE:07/01/08 | REV. NO. 00
RC39A2 — PANEL RIB GUTTER
STRAP ATTACHMENT

LARRY L. BOOZER
LICENSE
No. 44236
STATE OF FLORIDA
PROFESSIONAL ENGINEER

11/13/12

Larry L. Boozer, P.E. No. 44236
VP Buildings, Inc.
7031 Albert Pick Rd., Suite 200
Greensboro, NC 27409

PERMIT SET- For Building Dept. Approval

THE VP ENGINEER'S SEAL APPLIES ONLY TO THE WORK PRODUCT OF VP AND DESIGN AND PERFORMANCE REQUIREMENTS SPECIFIED BY VP. THE VP ENGINEER'S SEAL DOES NOT APPLY TO THE PERFORMANCE OR DESIGN OF ANY OTHER PRODUCT OR COMPONENT FURNISHED BY VP EXCEPT TO ANY DESIGN OR PERFORMANCE REQUIREMENTS SPECIFIED BY VP.

THIS DRAWING, INCLUDING THE INFORMATION HEREON, REMAINS THE PROPERTY OF VP BUILDINGS. IT IS PROVIDED SOLELY FOR ERECTING THE BUILDING DESCRIBED IN THE APPLICABLE PURCHASE ORDER AND SHALL NOT BE MODIFIED, REPRODUCED OR USED FOR ANY OTHER PURPOSE WITHOUT PRIOR WRITTEN APPROVAL OF VP BUILDINGS.

THE GENERAL CONTRACTOR AND/OR ERECTOR IS SOLELY RESPONSIBLE FOR ACCURATE GOOD QUALITY WORKMANSHIP IN ERECTING THIS BUILDING IN ACCORDANCE WITH THIS DRAWING, DETAILS REFERENCED IN THIS DRAWING, ALL APPLICABLE VP BUILDINGS ERECTION GUIDES, AND INDUSTRY STANDARDS PERTAINING TO PROPER ERECTION, INCLUDING THE CORRECT USE OF TEMPORARY BRACING.

VP Buildings
3200 Players Club Circle Memphis TN 38125

REV	DATE	BY	DESCRIPTION

NTS

11/1/2012 12:13:40

COVERING & TRIM SED'S

BUILDER: Lemartec Eng. & Const. Corp.
CUSTOMER: Florida Power and Light
LOCATION: Homestead, Florida
PROJECT: FPL-Dry Storage Building
BUILDER'S PO#: 2706-12158
FILENAME: 2706-12158-FPL-Dry Storage Building copy 2.trim

VP BUILDINGS
VARCO PRUDEN
VPC VERSION: 2012.3

JOB #: 12-23530
DATE: 11/7/2012
DRAWN/CHECK: VPC / JLB
PAGE:

© Copyright 2012 Buildings North America, Inc.

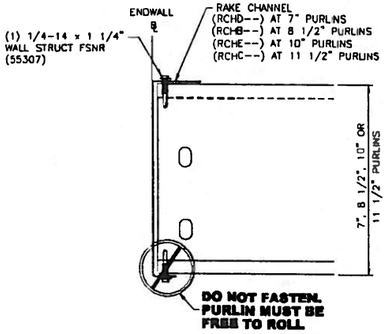

REV. DATE 07/01/09 | REV. NO 00 | RS10R1 | PR ROOF RAKE CHANNEL TO PURLIN
ALL PURLIN DEPTHS (ALL WALL PANEL)

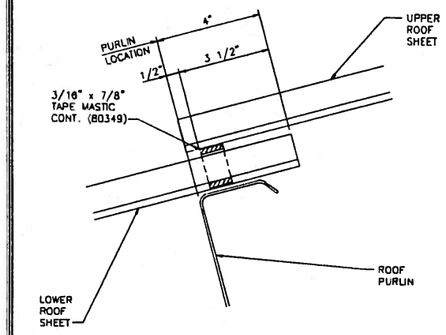

MEETS MIAMI-DADE AND BROWARD COUNTY, FL REQUIREMENTS (NOA NO. 09-0402.21) (EXPIRES 03/07/2014)

REV. DATE 08/15/09 | REV. NO 01 | RC02B7 | PANEL RIB ROOF
PANEL ENDLAP

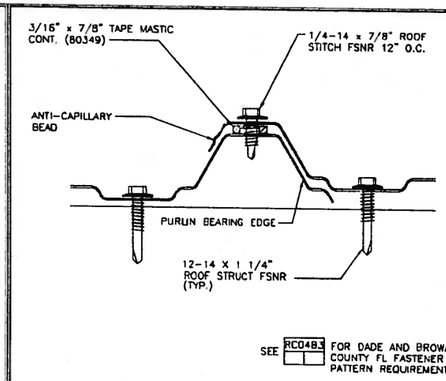

MEETS MIAMI-DADE AND BROWARD COUNTY, FL REQUIREMENTS (NOA NO. 09-0402.21) (EXPIRES 03/07/2014)

REV. DATE 11/18/10 | REV. NO. 02 | RC03B7 | PANEL RIB ROOF
PANEL SIDELAP

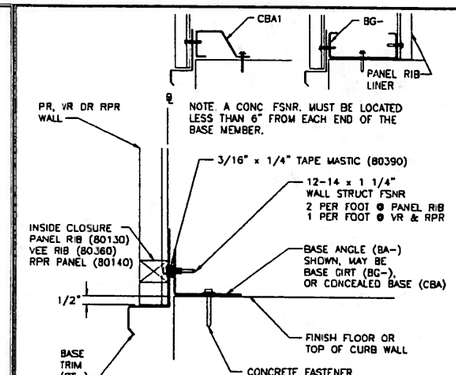

REV. DATE 07/01/09 | REV. NO. 00 | WC01AB | BASE OF WALL ATTACHMENT
PR, VR OR RPR W/ BASE TRIM

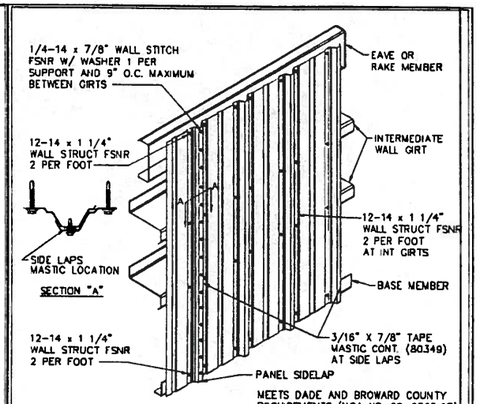

MEETS DADE AND BROWARD COUNTY REQUIREMENTS (NOA NO. 09-0505.07) (EXPIRES 07/01/2014)

REV. DATE 04/28/11 | REV. NO. 03 | WC04G6 | PANEL RIB WALL
FASTENER PATTERNS

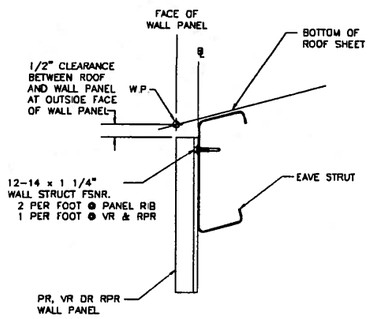

REV. DATE 07/01/09 | REV. NO. 00 | WC11F1 | PR, VR & RPR WALL AT EAVE
STANDARD EAVE PURLIN

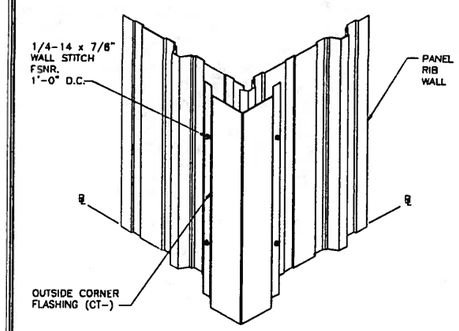

REV. DATE 07/01/09 | REV. NO. 00 | WC20A1 | OUTSIDE CORNER TRIM
PANEL RIB WALL

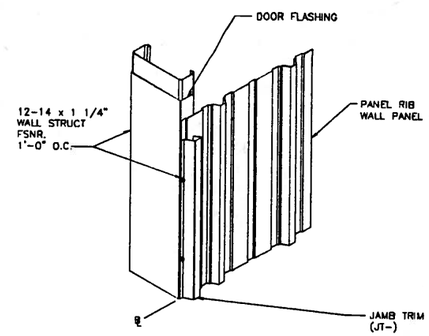

REV. DATE 07/01/09 | REV. NO. 00 | WC24A1 | JAMB TRIM AT OVERHEAD DOOR
PANEL RIB WALL

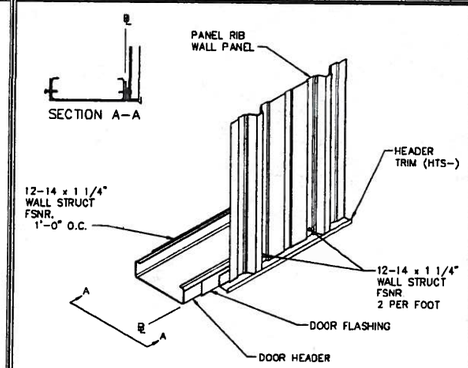

REV. DATE 03/13/13 | REV. NO. 01 | WC24A2 | WALL TRIM AT DOOR HEAD
OVERHEAD DOOR OPENING

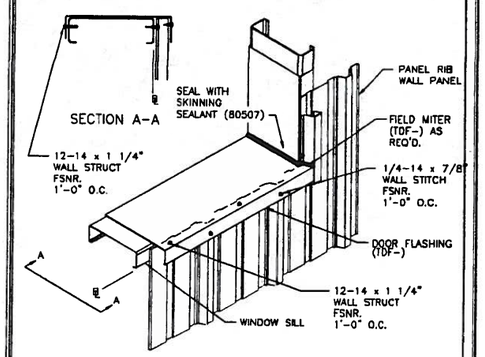

REV. DATE 07/01/09 | REV. NO. 00 | WC24A4 | SILL TRIM
FRAMED OPENING (PANEL RIB)

LARRY L. BOOZER
LICENSE
No. 44236
STATE OF FLORIDA
PROFESSIONAL ENGIN

Larry L. Boozer, P.E. No. 44236
VP Buildings, Inc.
7031 Albert Pick Rd., Suite 200
Greensboro, NC 27409

PERMIT SET- For Building Dept. Approval

THE VP ENGINEER'S SEAL APPLIES ONLY TO THE WORK PRODUCT OF VP AND DESIGN AND PERFORMANCE REQUIREMENTS SPECIFIED BY VP. THE VP ENGINEER'S SEAL DOES NOT APPLY TO THE PERFORMANCE OR DESIGN OF ANY OTHER PRODUCT OR COMPONENT FURNISHED BY VP EXCEPT TO ANY DESIGN OR PERFORMANCE REQUIREMENTS SPECIFIED BY VP.

THIS DRAWING, INCLUDING THE INFORMATION HEREON, REMAINS THE PROPERTY OF VP BUILDINGS. IT IS PROVIDED SOLELY FOR ERECTING THE BUILDING DESCRIBED IN THE APPLICABLE PURCHASE ORDER AND SHALL NOT BE MODIFIED, REPRODUCED OR USED FOR ANY OTHER PURPOSE WITHOUT PRIOR WRITTEN APPROVAL OF VP BUILDINGS.

THE GENERAL CONTRACTOR AND/OR ERECTOR IS SOLELY RESPONSIBLE FOR ACCURATE GOOD QUALITY WORKMANSHIP IN ERECTING THIS BUILDING IN ACCORDANCE WITH THIS DRAWING, DETAILS REFERENCED IN THIS DRAWING, ALL APPLICABLE VP BUILDINGS ERECTION GUIDES, AND INDUSTRY STANDARDS PERTAINING TO PROPER ERECTION, INCLUDING THE CORRECT USE OF TEMPORARY BRACING.

VP Buildings
3200 Players Club Circle Memphis TN 38125

REV	DATE	BY	DESCRIPTION

NTS

11/1/2012 12:13:42

COVERING & TRIM SED'S

BUILDER: Lemartec Eng. & Const. Corp.
CUSTOMER: Florida Power and Light
LOCATION: Homestead, Florida
PROJECT: FPL-Dry Storage Building
BUILDER'S PO#: 2706-12158
FILENAME: 2706-12158-FPL-Dry Storage Building

VP BUILDINGS INCORPORATED
VPC VERSION: 2012.3
a division of BlueScope Buildings North America, Inc.

JOB # 12-23530
DATE 11/2/2012
DRAWN/CHECK VPC / TLW
PAGE 28

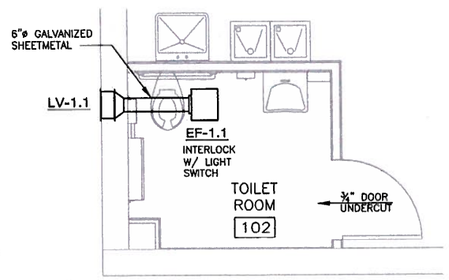

2 MECHANICAL FLOOR PLAN
1/2"=1'-0"

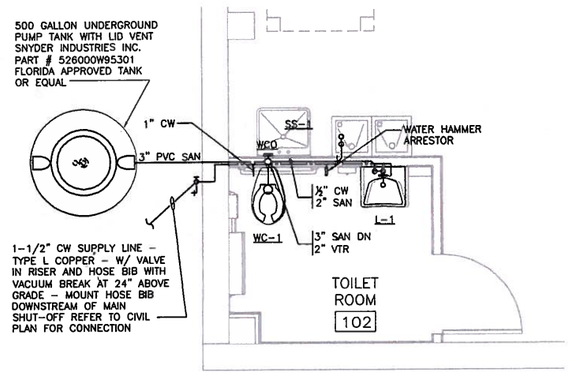

3 PLUMBING FLOOR PLAN
1/2"=1'-0"

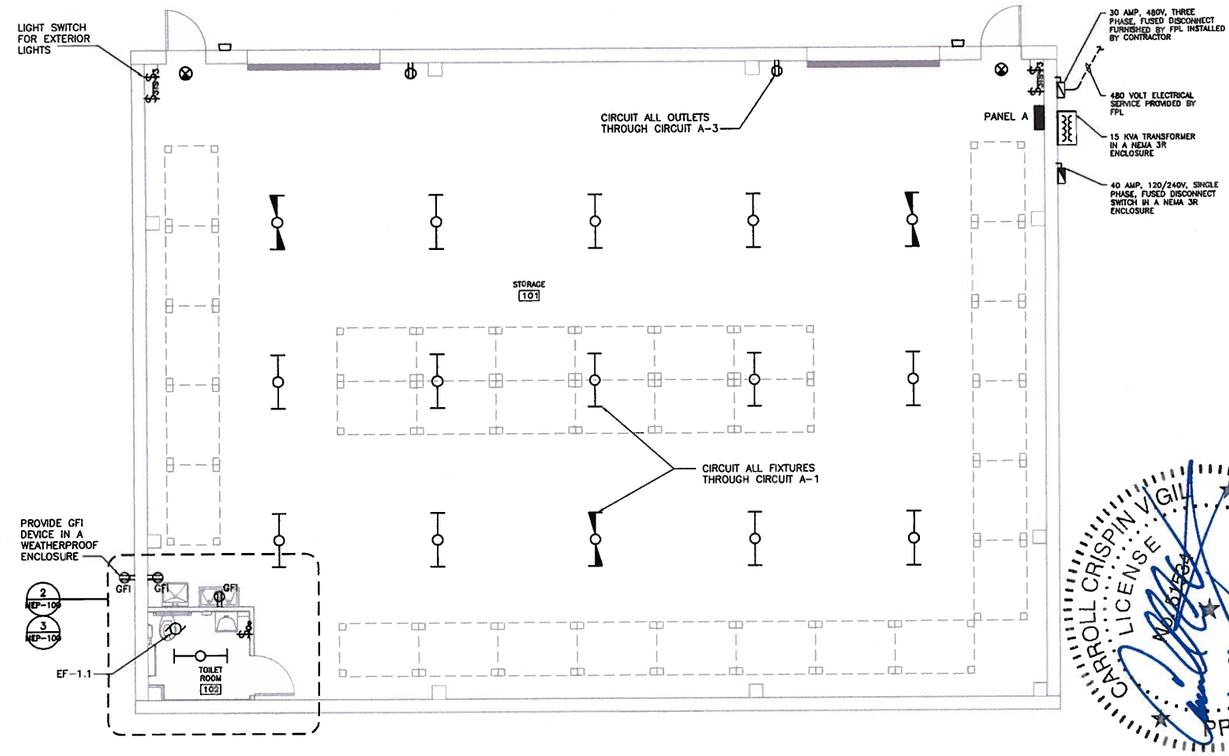

1 ELECTRICAL FLOOR PLAN
1/4"=1'-0"

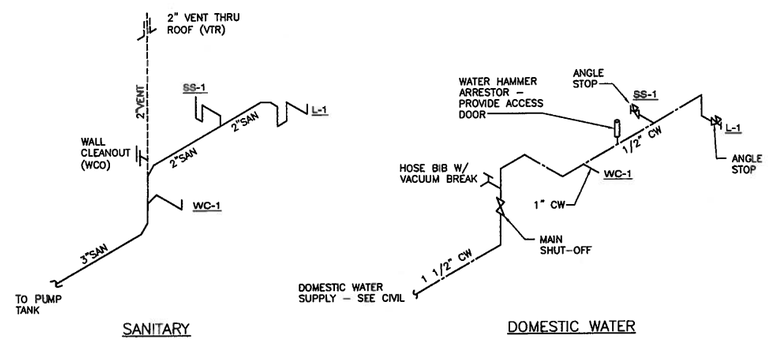

4 PLUMBING RISER DIAGRAMS
NTS

SYMBOL LEGEND

- 125 VOLT LIGHT SWITCH WITH INTEGRAL OCCUPANCY SENSOR, AT 54" A.F.F.
- 125 VOLT 3-WAY LIGHT SWITCH WITH INTEGRAL TIMER, AT 54" A.F.F.
- 125 VOLT DUPLEX POWER RECEPTACLE, AT 18" A.F.F.
- 70 WATT METAL HALLIDE WITH QUARTZ RESTRIKE AND PHOTOCELL CONTROL.
- 4' STRIP FLUORESCENT, 3 LAMP (F032T8 LAMPS), CHAIN HANG TO 14'-0" A.F.F. WITH CAGE PROTECTIVE COVER
- 4' STRIP FLUORESCENT, 3 LAMP (F032T8 LAMPS), CHAIN HANG TO 14'-0" A.F.F. WITH CAGE PROTECTIVE COVER AND INTEGRAL BATTERY BACK-UP.
- LED EXIT SIGN
- MOTOR
- 120 / 240 VOLT, 1ø, 3W PANELBOARD
- DOMESTIC COLD WATER PIPING
- SANITARY PIPING
- VENT PIPING

EQUIPMENT LIST

EF-1.1 CEILING CABINET EXHAUST – 100 CFM – 120V-1PH – GREENHECK MODEL SP OR EQUAL – SUSPEND FROM STRUCTURE AT 9'-0" A.F.F. PROVIDE FAN WITH INTEGRAL BACKDRAFT DAMPER, SOLID STATE SPEED CONTROLLER AND DISCONNECT. PROVIDE FLEXIBLE DUCT CONNECTION TO FAN.

LV-1.1 EXHAUST LOUVER – 12"x12" – GREENHECK MIAMI/DADE APPROVED WIND DRIVEN RAIN LOUVER MODEL EVH OR EQUAL. EXTRUDED ALUMINUM.

WC-1 WATER CLOSET – ADA – 17" RIM HEIGHT – MANUAL LOW FLOW FLUSH VALVE – AMERICAN STANDARD MODEL 3461 W/ SLOAN ROYAL 111– 1.28 FLUSH VALVE OR EQUAL.

L-1 ADA LAVATORY WITH METERED FAUCET – CARRIER MOUNTED. AMERICAN STANDARD MODEL 0355.034 – 4" CENTERS – CHICAGO FAUCET MODEL 857-E2805-665-PSHABCP OR EQUAL. PROVIDE WITH FLOOR MOUNTED CARRIER, GRID STRAINER AND CHROMED BRASS TRAP. PROVIDE WATER ANGLE STOP, BRAIDED CONNECTION AND ADA COMPLIANT INSULATION KIT.

SS-1 SERVICE SINK – FLOOR MOUNTED – FIAT MODEL FL-1 FLOOR MOUNTED MOLDED STONE WITH LEGS, CHROMED BRASS DECK MOUNT FAUCET AND HOSE END CONNECTION ON SPOUT (4" CENTERS) OR EQUAL. PROVIDE WITH DRAIN PLUG TYPE TAILPIECE AND TRAP WITH DRAIN. PROVIDE WATER ANGLE STOP AND BRAIDED CONNECTIONS (PIPE CW TO BOTH SIDES OF FAUCET).

PANEL SCHEDULE

PANEL	A	separately derived	Rated OCP	40	MCB	Rated Frame	100				Neutral Size	8													
			Voltage	240	120	AIC Rating	10,000				Feeder Size	8	No. of Feeder Sets	1											
			Phase	1		Bus	CU				Ground Size	8													
			Neutral	100%		Enclosure	3R				Conduit Size	3/4													

Ckt No.	Equipment Served	KVA	CKT BKR Poles	CKT BKR Trip	BRANCH CIRCUIT Ø	N	Gnd	C	Ø	Ckt	Equipment Served	KVA	CKT BKR Poles	CKT BKR Trip	BRANCH CIRCUIT Ø	N	Gnd	C
1	LIGHTING	1.44	1	20	10	10	10	1	A	2	SPARE		1	20				
3	RECEPTACLES	0.72	1	20	12	12	12	3/4	B	4	SPARE		1	20				
5	FAN EF-1.1	0.90	1	20	12	12	12	3/4	C	6	SPARE		1	20				
7	SPARE		1	20					A	8	SPARE		1	20				
9	SPARE		1	20					B	10	SPARE		1	20				
11	SPARE		1	20					C	12	SPARE		1	20				

Load_Type Served:	Connected Load (kVA)	Demand Factor	Demand Load	REMARKS:
Motor	0.00	100%	0.00	12 CIRCUIT PANELBOARD
Lighting	1.44	125%	1.80	
Receptacles (1st 10 kVA)	0.72	100%	0.72	
Receptacles (Remaining)		50%		
Heating	0.00	100%	0.00	
Cooling	0.00	100%	0.00	
Equipment	0.90	100%	0.90	
		TOTAL DEMAND kVA	3	
		TOTAL DEMAND AMPS	14	

0 2' 4' 8'
SCALE: 1/4" = 1'-0"
0 1' 2' 4'
SCALE: 1/2" = 1'-0"

ENGINEER OF RECORD
CARROLL C. VIGIL
FL RE 59534

CARROLL CRISPIN VIGIL
LICENSE
No. 51704
STATE OF FLORIDA
PROFESSIONAL ENGINEER

brph
www.brph.com
Copyright © 2012
Architects, Engineers, Constructors
Offices in Melbourne, West Palm Beach, Orlando, Fort Myers, Atlanta, Savannah
Board of Architectures License No. AA C000149
Board of Professional Engineers License No. 1439
These plans are protected by Federal Copyright protection. Unauthorized use may result in an infringement action.

DRAWN BY	APPROVED BY
DSB	CCV
DESIGNED BY DSB	DATE 11-06-12
CHECKED BY CCV	CAD CODE

FPL

SYSTEM	DISCIPLINE ARCH	PLANT/UNIT FPL TURKEY POINT
SCALE AS SHOWN	CAD FILE NAME	TITLE DRY STORAGE WAREHOUSE 9700 SW 344 STREET HOMESTEAD, FLORIDA
DRAWING SIZE 30" x 42"	FPL ARCHIVE NAME	
DRAWING NUMBER MECHANICAL, ELECTRICAL ,PLUMBING		SHEET MEP-100 REV

REV	DATE	REVISION DESCRIPTION	BY	CH	COR	APP	ORG	REV	DATE	REVISION DESCRIPTION	BY	CH	COR	APP	ORG