who desires to protest the Department's decisions or intended decisions concerning a procurement solicitation or contract award must file a protest with the Procurement Section, Department of Environmental Protection, 3800 Commonwealth Boulevard, Carr Building, Room 235, MS#93, Tallahassee, Florida 32399-3000, within the time prescribed in Section 120.57(3), F.S.

Any person who files an action protesting a decision or intended decision pertaining to contracts administered by the Department pursuant to Section 120.57(3), F.S. shall post with the Department at the time of filing the formal written protest a bond payable to the Department in an amount equal to 1 percent of the Department's estimate of the total value of the contract, which bond shall be conditioned upon the payment of all costs which may be adjudged against him in the administrative hearing in which the action is brought and in any subsequent appellate court proceeding. In lieu of a bond, the Department may accept a cashier's check or money order in the amount of the bond. FAILURE TO FILE THE PROPER BOND AT THE TIME OF FILING THE FORMAL PROTEST, WILL RESULT IN A DENIAL OF THE PROTEST.

The designated Department Procurement Section representative for this procurement is the undersigned. All communications hereon should cite the subject solicitation number and be directed to my attention at the address provided in Attachment 1, Section 1.6.

Sincerely,

Gwenn D. Godfrey
Procurement Administrator

GDG/gg

Please sign the confirmation of receipt below and fax this page back to the attention of Gwenn Godfrey at 850/245-2411 as soon as possible.

Email

FAX Received by: Richard A Slovarp
(Print Name)

Signature:

Date: 11/16/04

Godfrey, Gwenn

From: Exchange Administrator
Sent: Monday, November 15, 2004 5:44 PM
To: Godfrey, Gwenn
Subject: Delivery Status Notification (Relay)

ATT518787.txt

BAFO Instructions for DEP Soli...

This is an automatically generated Delivery Status Notification.

Your message has been successfully relayed to the following recipients, but the requested delivery status notifications may not be generated by the destination.

slovarpra@cdm.com

Godfrey, Gwenn

From: Godfrey, Gwenn
Sent: Monday, November 15, 2004 5:43 PM
To: 'slovarpra@cdm.com'
Subject: BAFO Instructions for DEP Solicitation No. 2005002C (Piney Point Project)

Importance: High

Mr. Slovarp-

The enclosed letter with attachments 1 through 7 make up the Department's Request for Best and Final Offers for DEP Solicitation No. 2005002C entitled "Invitation to Negotiate (ITN) for the Closure of the Piney Point Phosphogypsum Stack System". Please sign the second page of the letter and fax the page to my attention at the number provided to confirm your receipt of these documents.

Gwenn D. Godfrey
Procurement Administrator
Florida Department of Environmental Protection
3800 Commonwealth Boulevard, MS93
Tallahassee, Florida 32399
850/245-2361 or SunCom 205-2361
Gwenn.Godfrey@dep.state.fl.us

CDM BAFO Request.pdf

Attachment 1.pdf

Attachment 2.pdf

Attachment 3.pdf

Att 4 Pricing.xls

Attachment 5.pdf

Attachment 6.pdf

Attachment 7.pdf

Department of Environmental Protection

Jeb Bush
Governor

Marjory Stoneman Douglas Building
3900 Commonwealth Boulevard
Tallahassee, Florida 32399-3000

Colleen M. Castille
Secretary

SENT VIA EMAIL

November 15, 2004

Mr. Richard A. Slovarp, Vice President
CDM Constructors, Inc.
2301 Maitland Center Parkway, Suite 300
Maitland, Florida 32751

Subject: DEP Solicitation No. 2005002C entitled "Invitation to Negotiate (ITN) for the Closure of the Piney Point Phosphogypsum Stack System"

Dear Mr. Slovarp:

This letter shall serve as the Department's written notification of the instructions for submittal of Best and Final Offers (BAFOs) for the subject solicitation. These instructions are being provided to the three firms shortlisted by agency decision appearing on the Department of Management Services' Vendor Bid System on October 12, 2004. These instructions must be followed. Failure to do so may result in your submittal being rejected. Due dates and times will not be altered. The package consists of this transmittal letter with the following attachments:

Attachment 1 - General Instructions for the Preparation and Submission of Best and Final Offers (BAFOs) for the Closure of the Piney Point Phosphogypsum Stack System
Attachment 2 - Scope of Services from Original Solicitation
Attachment 3 - Scope of Services/Pricing Assumptions
Attachment 4 - BAFO Pricing Summary
Attachment 5 - Evaluation Criteria
Attachment 6 - Design Change Drawings
Attachment 7 - BAFO Checklist

Your response should comply fully with these instructions which stipulate what is to be included in the BAFO package. Prospective contractors submitting a response to this Request for Best and Final Offers shall identify the solicitation number, date and time of BAFO opening on the envelope or package transmitting their response. This information is used only to put the Department's mailroom on notice that the package received is a response to a Department solicitation and therefore should not be opened but delivered directly to the Department's Procurement Section.

This request for BAFOs does not commit the Department to pay costs incurred in the preparation and submission of a response in any form or to procure or contract for said services or supplies. The Secretary of the Department, or her written designee, are the only individuals who can commit the Department to the expenditure of funds in connection with any contract resulting from this solicitation.

Failure to file a protest within the time prescribed in Section 120.57(3), Florida Statutes (F.S.), or failure to post the bond or other security required by law within the time allowed for filing a bond shall constitute a waiver of proceedings under Chapter 120, F.S. Written notices, formal requests and proceedings must conform with the requirements set forth in Chapter 28-110, Florida Administrative Code. Any proposer

who desires to protest the Department's decisions or intended decisions concerning a procurement solicitation or contract award must file a protest with the Procurement Section, Department of Environmental Protection, 3800 Commonwealth Boulevard, Carr Building, Room 235, MS#93, Tallahassee, Florida 32399-3000, within the time prescribed in Section 120.57(3), F.S.

Any person who files an action protesting a decision or intended decision pertaining to contracts administered by the Department pursuant to Section 120.57(3), F.S. shall post with the Department at the time of filing the formal written protest a bond payable to the Department in an amount equal to 1 percent of the Department's estimate of the total value of the contract, which bond shall be conditioned upon the payment of all costs which may be adjudged against him in the administrative hearing in which the action is brought and in any subsequent appellate court proceeding. In lieu of a bond, the Department may accept a cashier's check or money order in the amount of the bond. FAILURE TO FILE THE PROPER BOND AT THE TIME OF FILING THE FORMAL PROTEST, WILL RESULT IN A DENIAL OF THE PROTEST.

The designated Department Procurement Section representative for this procurement is the undersigned. All communications hereon should cite the subject solicitation number and be directed to my attention at the address provided in Attachment 1, Section 1.6.

Sincerely,

Gwenn D. Godfrey
Procurement Administrator

GDG/gg

Please sign the confirmation of receipt below and fax this page back to the attention of Gwenn Godfrey at 850/245-2411 as soon as possible.

FAX Received by: _____
(Print Name)

Signature: _____

Date: _____

ATTACHMENT 1
GENERAL INSTRUCTIONS FOR THE PREPARATION AND SUBMISSION OF BEST AND FINAL OFFERS (BAFOs)
FOR CLOSURE OF THE PINEY POINT PHOSPHOGYPSUM STACK SYSTEM

These BAFO instructions incorporate by reference the information provided in DEP Solicitation No. 2005002C entitled "Invitation to Negotiate (ITN) for the Closure of the Piney Point Phosphogypsum Stack System", the addenda to ITN 2005002C, and the answers provided by the Department in writing to questions regarding the terms and conditions of the ITN. All information, explanations and instructions incorporated by reference are qualified and superseded by the BAFO instructions. To the extent that there is any conflict, inconsistency or ambiguity between or among these documents, the BAFO instructions shall control.

1.1 Solicitation Number: 2005002C

1.2 Solicitation Type: Invitation to Negotiate (ITN)

1.3 Date of ITN Issuance: July 16, 2004

1.4 Date of Request for BAFO: November 15, 2004

1.5 Program Area: Bureau of Mine Reclamation
Division of Water Resource Management
Florida Department of Environmental Protection (Department)

1.6 Time, Date and Place BAFOs are Due:

Responses must be received by:

Ms. Gwenn D. Godfrey
Procurement Section, Room 235
3800 Commonwealth Boulevard, MS93
Tallahassee, Florida 32399-3000
Phone: (850) 245-2361

NO LATER THAN 4:00 P.M. EASTERN STANDARD TIME (EST) ON WEDNESDAY, DECEMBER 1, 2004.

Caution: It is the respondent's sole responsibility to ensure that a response to this request for best and final offers is delivered prior to the time and date specified above. A response received at the designated office after the exact time specified for receipt will not be considered.

1.7 Confidentiality of BAFOs Received:

Once submitted, the BAFO's shall be subject to the confidentiality requirements of Section 119.07(3)(m), Florida Statutes.

1.8 Solicitation (BAFO) Schedule Information:

By Wednesday, December 1, 2004 at 4:00 P.M. EST, prospective contractors shortlisted on October 12, 2004 for this solicitation shall submit ten (10) hard copies and two (2) electronic copies of their response to this Request for Best and Final Offers. Electronic copies shall be submitted on Compact Disks in Portable Document Format (pdf). See instructions for response preparation in Section 1.18 and submittal information in Section 1.6.

On or after 8:30 A.M. on Tuesday, December 7, 2004, the recommended award will be posted on the Florida Department of Management Services (DMS) Vendor Bid System. To access the posted results, go to http://www.myflorida.com. Once at this site, the steps listed below should be followed to access the Vendor Bid System.

- Click on BUSINESS
- Click on "Doing Business with the State"
- Under the "Everything for Vendors and Customers" heading, click on "Vendor Bid System"
- Click on "Search Advertisements"
- Under the "Agency" search field, select the "Department of Environmental Protection" and click on "Initiate Search"
- Click on the solicitation number "2005002C BAFOs-AD"

These dates are to be used by prospective contractors for planning purposes and are subject to change. The Department reserves the right to revise the solicitation schedule provided above. Modifications of the schedule contained herein shall be provided via email to the primary contact person identified by the respondent.

Please notify the Department Procurement Section (see Section 1.6 above) no later than two (2) business days prior to the event if an accommodation because of a disability is required.

1.9 Questions:

As this Request for Best and Final Offers concludes the procurement process for DEP Solicitation No. 2005002C, no questions will be entertained by the Department for response.

The respondent is required to examine carefully the specifications and to be thoroughly informed regarding any and all conditions and requirements that may, in any manner, affect the work to be performed. No allowances will be made to the respondent because of a lack of knowledge of conditions or requirements and the selected vendor will not be relieved of any liabilities or obligations.

INFORMATION WILL NOT BE PROVIDED BY TELEPHONE. Any information received through oral communication shall not be binding on the Department and shall not be relied upon by any prospective respondent.

For the purposes of this solicitation, the terms respondent, offeror, contractor and consultant are used interchangeably and mean a person(s) or firm(s) submitting a response to this solicitation.

1.10 Notification:

The recommended award will be posted for review by interested parties at the location specified in Section 1.8 above on or after 8:30 A.M., Tuesday, December 7, 2004, and will remain posted for a period of seventy-two (72) hours, which does not include weekends or State observed holidays. Any respondent who desires to protest the recommended award must file a protest with the Procurement Section, Department of Environmental Protection, 3800 Commonwealth Boulevard, MS#93, Room 235 Carr Building, Tallahassee, Florida 32399-3000, within the time prescribed in Section 120.57(3), Florida Statutes and Chapter 28-110, Florida Administrative Code.

1.11 Contract Period:

The Department anticipates that the contract will begin on or about January 1, 2005, and remain in effect for five years, inclusive. The Department reserves the right to change the term of the contract based upon the negotiation process and what is determined to be in the best interest of the State. The Department reserves the right to renew any contract resulting from this solicitation. Renewal shall be subject to the terms and conditions set forth in the existing contract and shall be limited to no more than the initial term of the contract. Renewal of this Contract shall be in writing. All renewals are contingent upon satisfactory performance by the Contractor and the availability of funds.

1.12 Type of Contract Contemplated:

The Department seeks to issue a multi-year contract to address the Scope of Services described in this BAFO. Any elements of the BAFO and original ITN materials integral to and interdependent with the Scope of Services may also be included in the multi-year contract. Following the determination of award, these elements will be negotiated and included in the multi-year contract at the discretion of the Department. The

Department has determined that the method of payment for work conducted under the contract resulting from this solicitation will be made on a fixed price (lump sum) basis. However, the Department reserves the right to award another contract type if such will be most advantageous to the Department and the State of Florida, price and other factors considered.

1.13 Safety:

The Contractor(s) will be required to strictly comply with all applicable safety regulations and standards including all federal, state, and local laws, ordinances, rules and regulations. The Contractor(s) shall also comply with all OSHA trench safety requirements and with the Trench Safety Act (Senate Bill 2626). The Contractor and the Contractor's employees must comply with site-specific training or the Florida Phosphate Council (FPC) Member Facilities Contractor Safety & Health Training Program(s) and must have current valid certifications of completion of the site-specific or FPC training course before conducting any work under the contract.

It is understood and agreed that the work will be in an acidic environment where the ponded water and pore water within the phosphogypsum stack system, the phosphogypsum itself and rainfall runoff from the gypsum stack surfaces may have a pH as low as 2 and elevated dissolved solids concentrations.

All inspectors charged with routine inspection and maintenance must have satisfactorily completed training in earthen dikes and phosphogypsum stack system inspection requirements in accordance with the provisions of Chapter 62-672, F.A.C. before conducting any work under the contract.

1.14 Insurance:

A. General

The rates provided in the BAFO Pricing Summary spreadsheet (**Attachment 4**) shall include the cost for the general insurance requirements specified below.

The firm(s) selected under this ITN shall maintain, during the life of the contract, Workers' Compensation Insurance for all of its employees connected with the contract. Such insurance shall comply fully with the Florida Workers' Compensation Law. In case any class of employee engaged in hazardous work under the contract is not protected under the Workers' Compensation statute, the selected contractor shall provide adequate insurance, satisfactory to the Department, for the protection of its employees not otherwise protected.

The firm(s) selected under this ITN shall maintain, during the life of the contract, commercial general liability coverage with limits of not less than $1,000,000 per occurrence and $5,000,000 general aggregate for bodily injury and property damage; and comprehensive automobile liability coverage with limits of not less than $1,000,000 combined single limit and Contractor Pollution Liability coverage with limits not less than $5,000,000 each occurrence and aggregate. Neither the Department nor the Receiver shall be responsible for any deductible or self-insured retention.

The selected contractor shall be required to submit insurance certificates evidencing such insurance coverage prior to the execution of a contract with the Department. The certificate of insurance shall contain a provision that the insurance will not be cancelled or modified for any reason except after thirty (30) days written notice to the Department Procurement Administrator, with the exception of ten (10) days notice for non-payment of premium by the insured. The certificate of insurance shall also identify the Department and the Receiver as additional insureds.

B. Specialty Insurance (Stop Loss/Pollution and Environmental Legal Liability)

The respondent recommended for contract award will be required to provide for "Stop Loss" insurance coverage, in addition to a Pollution Legal Liability Policy, prior to contract execution. The BAFO Pricing Summary spreadsheet provided as **Attachment 4** does not include a cost factor for this coverage. During the final contract negotiation process, the Department will work with the selected contractor and its insurance broker to negotiate the terms, coverage, and financial structure of the insurance program. The cost for this coverage will be addressed in the contract prior to execution. Neither the Department nor the

Receiver shall be responsible for any deductible or self-insured retention. This insurance program is in addition to the performance bond described below. The Department and the Receiver shall be included as insureds in the insurance program described above.

1.15 Performance Bond:

At the discretion of the Department and based on contract negotiations, the selected respondent may be required to post a performance bond in an amount not to exceed one-hundred percent (100%) of the negotiated contract price, prior to the execution of the resultant contract. The bond shall be payable to the Department and issued from a surety company licensed to do business in the State of Florida. In the event that the renewal option(s) of the contract are exercised, the bond shall also be renewed.

The BAFO Pricing Summary spreadsheet provided as **Attachment 4** does not include a cost factor for the performance bond. During the final contract negotiation process, the Department will work with the selected contractor and its surety company to negotiate the terms, coverage, and financial structure of the performance bond. The cost for this bond will be addressed in the contract prior to execution.

1.16 MyFloridaMarketPlace Transaction Fee **Reminder**:

The State of Florida, through the Department of Management Services, has instituted MyFloridaMarketPlace, a statewide e-procurement system. Pursuant to Section 287.057(23), Florida Statutes (2004), all payments shall be assessed a Transaction Fee of one percent (1%), which the vendor shall pay the State.

For payments within the State accounting system (FLAIR or its successor), the Transaction Fee shall, when possible, be automatically deducted from payments to the vendor. If automatic deduction is not possible, the vendor shall pay the Transaction Fee pursuant to Rule 60A-1.031(2), F.A.C. By submission of these reports and corresponding payments, the vendor certifies their correctness. All such reports and payments shall be subject to audit by the State or its designee.

The vendor shall receive a credit for any Transaction Fee paid by the vendor for the purchase of any item(s) if such item(s) are returned to the vendor through no fault, act, or omission of the vendor. Notwithstanding the foregoing, a Transaction Fee is non-refundable when an item is rejected, returned, or declined, due to the vendor's failure to perform or comply with specifications or requirements of the agreement.

Failure to comply with these requirements shall constitute grounds for declaring the vendor in default and recovering reprocurement costs from the vendor in addition to all outstanding fees. VENDORS DELINQUENT IN PAYING TRANSACTION FEES MAY BE EXCLUDED FROM CONDUCTING FUTURE BUSINESS WITH THE STATE.

1.17 Number of Copies to be Submitted:

Ten (10) signed hard copies of the response package and two (2) electronic copies must be submitted for review by the Department. Each hard copy is to be bound individually. One hard copy of the response shall bear original signatures. Use of legible reproductions of signed originals is authorized for all other copies of the response. Electronic copies shall be submitted on Compact Disks in Portable Document Format (pdf).

1.18 General Instructions for Preparation of Best and Final Offers:

The instructions for this Request for Best and Final Offers (BAFOs) have been designed to help insure that all responses are reviewed and evaluated in a consistent manner, as well as to minimize costs and response time. ANY AND ALL INFORMATION SUBMITTED IN VARIANCE WITH THESE INSTRUCTIONS WILL NOT BE REVIEWED OR EVALUATED.

The BAFO shall consist of the following parts:

A. Transmittal Letter:

This letter serves only as the document covering transmittal of the BAFO package. The letter must provide the name, title, address, telephone number and email address of the official contact and an alternate, if available. This individual shall have the authority to bind the respondent and shall be available to be contacted by telephone or attend meetings, as may be appropriate regarding the solicitation schedule.

B. BAFO Response:

The BAFO package shall be prepared by each respondent utilizing 8.5" x 11" paper (with the exception of the non-text page allowances in Sections 1.18.B.3 and 1.18.B.5, and the excel spreadsheet provided as **Attachment 4** for the pricing component of the BAFO). Each respondent shall limit the BAFO to no more than 140 pages (excluding the BAFO Pricing Summary spreadsheet provided by the Department for completion). The page limit of each section of the BAFO shall be as follows:

- For Sections 1.18.B.1 through 1.18.B.4 the respondent shall limit the number of pages to no more than 100 pages. The page limits for each of these sections shall be determined by the respondent, but the total for the four sections shall not exceed 100 pages.
- For Section 1.18.B.5, the respondent shall limit the number of pages to no more than 35 pages.
- For Section 1.18.B.6, the respondent shall limit the number of pages to no more than 5 pages, excluding the BAFO Pricing Summary spreadsheet provided as **Attachment 4**.

Any photographs, maps, diagrams, charts or other non-text material, which provides information about the respondent, will be included in the page limitation of the BAFO.

In responding to this Request for Best and Final Offers, the Scope of Services as provided in the original solicitation (copy provided as Attachment 2) and the Scope of Services/Pricing Assumptions identified in or modified via Attachment 3 must be considered.

Respondents shall prepare their BAFO in the order outlined below, with the sections tabbed for ease of identification and review by the evaluation committee members. However, in no event shall the respondent use the tab pages to present additional information. Tab pages that present information shall be counted in the page limits established above.

The BAFO shall address each of the following subjects:

1. Résumé/Experience of Personnel (page limit guidelines specified above)

Provide a brief bio/résumé for each member of your executive, management and supervisory staff and for each of your current professional staff or subcontractor staff that you intend to utilize on this project or that would serve as back-up staff that you might utilize on this project. *Do not include résumés of staff that you do not intend to use on this project.* Include, but do not limit the information to, experience, licenses, continuing education/training, and professional designations and affiliations. Also, include any awards or special recognition for sustained productivity and leadership.

No changes to subcontractors and key staff members listed in the BAFO will be allowed without the prior written consent of the Department. The Department will require that any proposed replacements have at least equivalent qualifications and experience as the subcontractor/staff member being replaced.

2. Qualifications of Respondent/Subcontractor in Meeting Areas of Expertise Needed (page limit guidelines specified above)

Provide a detailed narrative of your organization's (your team's) experience and expertise in each of the areas/categories identified below, with particular emphasis on experience during the last five (5) years. Please be specific. **Failure to meet the minimum qualifications and/or failure to provide documentation that clearly demonstrates and verifies the Respondent's qualifications in each area, as determined by the Department, shall result in the response being deemed nonresponsive and therefore rejected. Respondent's team must collectively meet the minimum qualifications specified herein in order to qualify for contract award.** Any entity that meets one or more of the qualifications may serve in multiple capacities.

If a subcontractor is utilized, describe the role the subcontractor team member will play in the performance of services rendered under a contract resulting from this solicitation. If you have made a change in a subcontractor proposed in your original response to the ITN, clearly indicate that a change was made by identifying the original subcontractor proposed and the new subcontractor selected. Provide your reasoning for the change. For each new subcontractor identified, supply a written letter of commitment from the subcontractor to work with the respondent on this project. The written documentation shall be a one (1) page letter supplied by the subcontractor on its letterhead stationery, clearly identifying the Department Solicitation Number (2005002C), the project title (Closure of the Piney Point Phosphogypsum Stack System), and the prime contractor with whom the firm intends to subcontract. Failure to submit a letter of commitment from a new intended subcontractor identified in the BAFO shall result in the disallowance of the qualifications and experience of that subcontractor from consideration in the evaluation process.

Operator.

Respondent must have at least one year of demonstrated experience in the successful operation, inspection and maintenance of an active phosphogypsum stack system or a phosphogypsum stack system undergoing closure, at least 400 acres in size. Alternatively, respondent must have on its staff one or more employee(s) that would be assigned to this project having at least 5 years demonstrated experience in operation, inspection and maintenance of a phosphogypsum stack system. Respondent's experience must include process water management and emergency dike repair.

Team Leader.

The team leader shall serve as the point of contact between the Department and the respondent(s) team and is responsible for coordination of all activities and reporting to the Department under this contract. The respondent shall specify the designated team leader and submit a statement of his or her training, education and experience. The team leader must have demonstrated project management experience and demonstrated experience interacting with regulatory and environmental entities or agencies, State and County governments, non-technical public, the press, etc.

Water Treatment Contractor(s).

Water treatment must be performed by an entity or collective entities with at least six (6) months of demonstrated experience in the consumption and treatment of process waters from a phosphogypsum stack system at rates in excess of 0.4 MGD (hereafter referred to as Water Treatment Contractor). The respondent shall have documented experience and specific expertise in the proposed method(s) of process water treatment that respondent intends to use, and in the management and disposal of reject, treatment sludges or other waste products associated with the proposed treatment method(s). Alternatively, respondent must have on its staff one or more employee(s) that would be assigned to the project having at least 5 years demonstrated experience in the treatment of process waters from a phosphogypsum stack system and in the management and disposal of treatment sludges.

Liner Contractor.

Liner installation must be performed by a qualified Liner Contractor/Liner Installer as defined in this Section (hereafter referred to as the Liner Contractor). The Liner Contractor shall be an approved Manufacturer of the High Density Polyethylene (HDPE) liner (Agru-America, Inc., GSE Lining Technology, Inc., or Poly-Flex, Inc.) or an approved Contractor trained and licensed to install the HDPE liner being used on the project.

The Liner Contractor shall be well experienced in the installation of HDPE smooth and textured liners on phosphogypsum stack systems or other similar type systems (containing a preponderance of silt-sized particles), installation of geonets and geotextiles, and must have installed and have in service in similar closure-type applications, for a period of not less than two years, at least 4 million square feet of 40-mil to 80-mil HDPE liner. The Liner Contractor shall submit a list of at least ten completed facilities, totaling a minimum of 4 million square feet of installed HDPE liner. The following information shall be provided for each installation.

- Name and purpose of facility, location, and date of installation.
- Name of Owner and Engineer, Liner Manufacturer, and name and telephone number of contact at the facility who can discuss the project.
- Type and thickness of HDPE liner installed, and surface area covered.
- Type of field seaming/welding performed.

The Liner Contractor Master Seamer(s)/Welder(s) to be assigned to this project must have similar-type experience on similar-type completed facilities totaling a minimum of 3 million square feet of HDPE liner installation. All other seamers/welders and quality control technicians shall have a minimum of 1.5 million square feet of related HDPE liner installation experience.

The Liner Contractor and/or its subcontractors shall be experienced in placing and compacting soil above a liner, and in the handling and installation of geonet/geotextile composites, geotextiles, concrete erosion control mats, straw erosion mats, sod and all other materials required to complete the work. Demonstration of the experience of the Liner Contractor and/or its subcontractors shall be submitted with the supporting information.

The Liner Contractor must designate a site supervisor for this project who has supervised construction of a minimum of two projects of similar size and scope. Résumés of the Liner Contractor's designated Project Manager and Site Supervisor(s) must be included with the supporting information.

Earthwork Contractor.

Earthwork must be performed by a general earthwork contractor well experienced in earthwork using both soil and phosphogypsum (hereafter referred to as the Earthwork Contractor), and must, at a minimum, demonstrate the successful completion of at least three projects over the past five years similar in size and scope to this project with at least one project involving earthwork using phosphogypsum with balanced cut and fill quantities on the order of 500,000 yd^3. The Earthwork Contractor must be well experienced in earthwork construction related to site grading; dike construction; compaction; reinforced concrete drainage structure construction; installation of relief drains with collector pipes, filter gravel and filter fabric; and fine grading and maintenance of surfaces to receive a geomembrane liner. In particular, the Earthwork Contractor must be well experienced in dewatering, moisture conditioning and compacting phosphogypsum materials. For each

project submitted to document the experience, the following information on the completed facility must be provided with the supporting information:

- Name and purpose of facility, location, and date of installation.
- Name of Owner and Engineer, and name and telephone number of contact at the facility who can discuss the project.
- Description of the facility (e.g., volume of earthwork, lined area, type drainage structures, etc.)

The Earthwork Contractor must designate a site supervisor for this project who has supervised construction of a minimum of two projects of similar size and scope. Résumés and qualifications of the Earthwork Contractor's designated Project Manager and Site Supervisor(s) must be included with the supporting information.

The Operator may serve as the Earthwork Contractor if he is qualified to do so.

HDPE and Drain Contractor or Subcontractor.

Pipe and drainage work must be performed by a contractor experienced and knowledgeable in the installation and fusion welding of HDPE pipe and fittings up to at least 24 inches in diameter, installation of corrugated HDPE drainage tubing, installation of HDPE geonets, installation and field sewing of non-woven geotextiles, and associated handling, placement and compaction of drain aggregates and soil or gypsum trench backfill (hereafter referred to as the Pipe and Drain Contractor/Subcontractor). The Pipe and Drain Contractor/Subcontractor shall have at least five years general experience with the installation and fusion welding of HDPE pipe and installation of dewatering drains, and shall have successfully completed at least one project on a phosphogypsum stack of similar size and scope. Documentation of five years general experience and specific descriptions of the Pipe and Drain Contractor/Subcontractor's phosphogypsum stack projects is required.

The Liner Contractor or the Earthwork Contractor may also serve as the HDPE Pipe and Drain Contractor if either is qualified to do so.

Grassing Contractor or Subcontractor.

Grassing and side slope stabilization shall be performed by a contractor experienced and knowledgeable in grassing (by seeding and/or sodding) earthen and phosphogypsum surfaces including ground preparation, amending phosphogypsum with dolomitic limestone, applying fertilizer, and applying mulch (hereafter referred to as the Grassing Contractor/Subcontractor). The Grassing Contractor/Subcontractor shall have at least five years relevant Florida experience, and shall have successfully completed at least one project on a phosphogypsum stack requiring the seeding and dolomitic limestone amendment of phosphogypsum stack side slopes, and one project requiring the seeding of a soil cover atop a geomembrane liner. Documentation of at least five years grassing experience in Florida, and specific descriptions of the Grassing Contractor/Subcontractor's phosphogypsum stack projects and geomembrane liner soil cover projects is required.

3. Organizational Chart (page limit guidelines specified above)

Provide the proposed organization chart for the project. Identify all positions and their associated duties. Identify all officers and senior management personnel. The organizational chart submitted for this section may utilize paper no larger than 11" x 17". Each page of the organizational chart supplied in this section will be counted as a single page, regardless of the size of the paper used.

4. Key Staffing Assignments (page limit guidelines specified above)

The respondent shall designate the specific individuals that will be assigned to fill the following functions. The résumés for these individuals should be included, along with résumés of other staff, under the Résumé/Experience of Personnel section of your BAFO for reference by the evaluation committee. Do not list more than one person in each category and do not create additional categories. For purposes of responding to this section of the request for BAFOs, the term "on-site" shall mean an employee who averages 35 hours or more each week on the project site. Special emphasis will be placed on key personnel assigned to this project, with particular interest on those positions identified with an asterisk (*).

Project Management

- Overall Program Manager*
- On-site Overall Project Manager (could also serve as Program Manager)*
- Team Leader (could also serve as Program Manager or On-Site Project Manager)*

Operation and Maintenance

- On-site Operation and Maintenance (O & M) Manager*
- Assistant to the Operation and Maintenance Manager (if applicable, i.e., optional)
- Lead On-site Operation and Maintenance Superintendent

Water Consumption

- On-site Water Consumption Manager (could also serve as O & M Manager)*
- Assistant to Water Consumption Manager (if applicable, i.e., optional)
- Lead On-site Water Consumption Superintendent

Closure Construction

- On-site Construction Manager (for at least the first 2 years, while closure construction activities are underway)*
- Earthwork Superintendent*

5. Detailed Project Proposal/Scope of Services (35 page limit)

Provide a detailed proposal of the work tasks that will be undertaken in order to accomplish the closure and maintenance of the Piney Point Phosphogypsum Stack System as described in this Request for Best and Final Offers. In responding to this Request for Best and Final Offers, the Scope of Services as provided in the original solicitation (copy provided as **Attachment 2**) and as modified via the Scope of Services/Pricing Assumptions identified in **Attachment 3** must be considered. Address each of the major tasks that are summarized below.

a. Facility Maintenance and Operation
b. Process Water Consumption.
c. Closure Construction and Closure Schedule.

The respondents should include in this section any graphics, technical drawings, photographs, maps, diagrams, charts or other non-text material, which provides information about the respondent's project proposal. Documents submitted in this section, providing non-text information, may utilize paper no larger than 11" x 17". Each page in this section will be counted as a single page, regardless of the size of the paper used.

6. Proposed Pricing (5 page limit)

Respondents shall complete the ***yellow highlighted cells*** on the BAFO Pricing Summary spreadsheet provided as **Attachment 4** of this Request for Best and Final Offers. This spreadsheet has been set up to calculate costs based on the respondent's data input. Do not attempt to modify or change this spreadsheet or the mathematical calculations embedded in the document. The five (5) pages allocated for this section should be used to address pricing considerations identified in **Attachment 3**. If a spreadsheet error is suspected, please note the error in this section of your response to the BAFO request. While the pricing is subject to the negotiation phase of the selection process, the proposed schedule will be used in the evaluation. Rather than awarding the maximum points to the lowest cost, the evaluation process will consider the probability of timely successful completion of the project and value received by the Department relative to the cost.

1.19 Evaluation Criteria:

A. General

1. The Department reserves the right to accept or reject any or all offers received and reserves the right to make an award without further discussion of the offers submitted. Therefore, offers should be submitted initially in the most favorable manner.

2. A non-responsive offer shall include, but not be limited to, those that: a) are irregular or are not in conformance with the requirements and instructions contained herein; b) fail to utilize or complete prescribed forms; or c) have improper or undated signatures. A NON-RESPONSIVE OFFER WILL NOT BE CONSIDERED.

3. The Department may waive minor informalities or irregularities in the offers received where such are merely a matter of form and not substance, and the corrections of which ARE NOT PREJUDICIAL to other respondents.

B. Scoring

Each offer will be reviewed by a selection committee of at least three (3) members. Each of the reviewers will work independently using the evaluation criteria contained in **Attachment 5**. Each committee member will use the total point scores to rank the responses (i.e. highest point total = 1, 2nd highest = 2). The committee chairman will calculate an average rank for each response, combining all rankings of the reviewers, and present them to the selection committee, without accompanying respondent names, who will then determine the recommended contract award(s).

For example:

Firm	Raw Points Received	Rank
Company A	198	1.5
Company B	175	3
Company C	198	1.5

In the event that multiple firms have the same raw point score, the rank positions needed to cover those firms are averaged and each firm receives that rank. In this case the first and second ranks are tied so 1 + 2 = 3; 3 divided by 2 = 1.5. Each firm receives a rank of 1.5.

Any requirement of this Request for Best and Final Offers which indicates the consequence of any noncompliance shall be strictly enforced.

REMAINDER OF PAGE INTENTIONALLY LEFT BLANK

ATTACHMENT 2
SCOPE OF SERVICES FROM ORIGINAL SOLICITATION

Note: All references to alphabetical Attachments (i.e., Attachments A and J) are references to the corresponding attachment in the original solicitation.

Prior to 2000, Piney Point Phosphates, Inc. (PPP or Piney Point) operated a phosphate fertilizer manufacturing complex (described as SIC Code 2874 and regulated under 40 CFR 418) at a location along U.S. Highway 41 approximately six miles north of the city of Palmetto in Manatee County, Florida. The complex consists of: (1) a sulfuric acid plant with associated molten sulfur storage tanks; (2) a phosphoric acid plant with an associated phosphogypsum stack system; (3) an ammoniated phosphate fertilizer plant with storage of ammonia, phosphoric acid, and dry products; and (4) the infrastructure necessary to support these operations. The existing phosphogypsum stack system at the site is comprised of an old and new gypsum stack, each incorporating two 50 to 70-foot high impoundments, a contact process water pond (designated south cooling pond), a sludge holding pond (designated modified north cooling pond), and a network of seepage, process water and stormwater runoff collection ditches encompassing a total watershed of approximately 457 acres. Detailed background information and other associated documents will be available at the Bureau of Mine Reclamation website (www.dep.state.fl.us/water/mines/index.htm) under the link "Piney Point Invitation to Negotiate – Background and Technical Documents," beginning July 20, 2004.

In February 2001, PPP filed a petition for protection from creditors in the U.S. Bankruptcy Court in Tampa, Florida (Chapter 11, subsequently converted to Chapter 7 in October 2001). At the time of filing, PPP notified the Florida Department of Environmental Protection (DEP or the Department) that PPP was financially incapable of maintaining the Piney Point gypsum stack system to prevent a release of the ponded 600 million gallons (MGal) of untreated, acidic process wastewater stored onsite in the gyp stacks and ponds at that time. Subsequently, the Circuit Court of Manatee County, Florida, appointed Louis J. Timchak, Jr. as Receiver of the Piney Point gypsum stack system in May 2001. Mr. Timchak does not have responsibility for maintaining the plant site production facilities nor is he an owner or operator of the gypsum stack system. He is authorized by court order to "preserve, protect, and maintain the Property" and to "take all reasonable steps and action to preserve the Property's environmental integrity and its compliance with environmental regulations." Therefore, he is authorized to utilize the existing facilities (including existing water supply wells) and rely upon them as necessary. His primary responsibility is to maintain the Piney Point gypsum stack system to prevent a release of untreated, acidic process wastewater. The future role of the Receiver in relation to the successful respondent shall be to authorize and allow access to the property and to the existing on-site equipment. It shall be a responsibility of the respondent(s) to provide monthly progress reports in such form as the DEP and Receiver shall require, to both the Receiver and the DEP.

The Receiver has retained the services of a third party engineer (Engineer) to conduct the services described below. The Receiver will continue to retain the Engineer to provide these services during the contract term. Engineering services by the Engineer shall include but shall not necessarily be limited to the following:

1. Assist the Contractor in the preparation, review and approval of a current and up-to-date Emergency Operations Plan for the phosphogypsum stack system (refer to "Calendar Year 2003 Emergency Operations and Water Management Plan, Piney Point Phosphates, Inc. Phosphogypsum Stack System", issued December 3, 2003 by Ardaman & Associates, Inc) (Note: This document may be found as part of the Background and Technical Documents on the Bureau of Mine Reclamation website as noted above) as well as any regular or annual updates to the emergency operations and water management plans reflecting changed conditions;
2. Perform water balance analyses, and prepare water balance projections on a monthly basis, for both normal rainfall and wet weather, to update water consumption needs for the next twelve months, while also making provisions to safely contain storm surges within the system;
3. Inspect trouble areas and critical conditions affecting dike safety. Make recommendations to the Contractor in to order remediate such problem areas, and inspect and approve all dike repair work; in addition, perform a detailed annual inspection of all above-grade impoundments and containment dikes;
4. Regularly communicate with and assist the Contractor in water management issues and process water and waste disposal planning and implementation;

5. Complete a groundwater quality assessment and prepare updated closure and post-closure groundwater monitoring plans for approval by the DEP;
6. Prepare Drawings and Specifications for closure of all components of the phosphogypsum stack system and for routing runoff from the closed system;
7. Perform quality control, quality assurance and construction inspection services on a full-time basis, as third-party engineer, for all closure construction activities;
8. Assist in disseminating information to regulatory and environmental entities or agencies, State and County governments, non-technical public, the press, etc. Communicate regularly with the Contractor and the DEP on compliance issues, and for necessary approvals, etc. Monitor and report to the DEP and Receiver on Contractor's compliance with all applicable laws, rules and regulations that govern the operation and management of the gyp stack system.

The selected contractor shall assume responsibility for operation & maintenance (O & M) of the site, including site safety, and responsibility for implementing water consumption (at a minimum average sustained rate) of the ponded process water, as well as consumption of pore water draining from the gypsum stacks, to enable and expedite the remaining phased closure construction of the entire phosphogypsum stack system. The selected contractor shall also assume responsibility for closure construction and responsibility for consumption of post-closure gypsum stack pore water drainage for the duration of the contract in accordance with the site Order and NPDES permit requirements (see Attachment J).

Respondent(s) Detailed Project Proposal/Scope of Work (see Attachment A, Section A.26, C.5) shall include, but shall not be necessarily limited to, the following activities: environmental services, including all necessary permitting activities; facility operation, management, maintenance, monitoring; site safety; process water management and storage, consumption (including treatment and discharge); phosphogypsum stack system closure construction; and a detailed closure sequence and closure schedule. The qualifications of the team members making a joint proposal shall meet the minimum requirements specified in the Qualifications Section (see Attachment A, Section A.26, C.4). Background information and relevant documents that will be of assistance in preparing a proposal are provided on the Bureau of Mine Reclamation's website as described above, beginning on July 20, 2004. The purpose of this ITN is to negotiate and contract for all these services, including identification of milestones and deliverables, with a qualified private organization(s). The DEP will consider joint ventures and affiliations among organizations qualified in different areas of expertise, only if a single proposal is submitted by the respondent(s) team prior to the solicitation response deadline. The minimum components of the Detailed Project Proposal/Scope of Work are described as follows:

A. Facility Maintenance and Operation

As Operator, the Contractor shall be in-charge of site safety, and shall be responsible for developing, publishing, updating and adhering to an operation and maintenance plan, approved by the third party Engineer, and a contingency plan as required by all laws, regulations and rules. (Note: Refer to "Contingency Plan/Response Procedures for an Unplanned Process Water Release from the Piney Point Phosphates Phosphogypsum Stack System", issued October 2002, by Shaw and ECT. This document may be found as part of the Background and Technical documents located on the website listed above)

The Operator shall follow approved procedures for the transfer of water among the various impoundments, and shall be responsible for water management and waste disposal (e.g., lime treatment sludges), and for operation and maintenance of all pumps, siphons, spillways, dikes, pipelines, power, back-up pumps, back-up generators, etc., in compliance with the facility's emergency operation plan and all State and federal rules and regulations.

The Operator shall measure and record rainfall at the site on a daily basis, and shall also measure and record the water level elevations in the various impoundments daily. The Operator shall also be responsible for both daily and weekly inspections of the perimeter earthen dikes and water control structures, including potential trouble areas and critical conditions, and for all maintenance and repair needed to maintain the earthen dikes and gypsum stack impoundments in a safe condition as directed or approved by the third party Engineer. Employees who have received annual training as specified by Rule 62-672, F.A.C and are experienced in this activity shall perform inspections. The Operator shall be responsible for piezometric water level readings (quarterly when pond levels are below normal surge

levels; and weekly when pond levels are higher) and for reporting all relevant water information and inspection findings, etc., on a monthly basis to the Engineer (for evaluation and preparation of calibrated water balance analyses, etc.) and to the DEP. On-site conditions may warrant more frequent reporting.

The Operator shall also be responsible for implementing all groundwater monitoring plan requirements, and surface water discharge monitoring requirements (quality and flow). The Operator's responsibilities shall also include compliance with all surface water discharge requirements, as well as post-closure care and maintenance in accordance with applicable Order and NPDES permits and other permits and requirements specified under Rules 62-620, 62-672, and 62-673, F.A.C.

B. Process Water Consumption

The selected contractor shall be responsible for developing, updating and adhering to a water consumption plan to be approved by the DEP. Consumption of the process water may be undertaken by using one or more of the following methods:

1. Reducing fresh water input into the system (groundwater inflow and well water input) and minimizing the process system watershed to reduce the quantity of contaminated water that accumulates in the system over time;
2. Promoting evaporation of process water within the system through controlled use of enhanced evaporation methods (e.g., spray evaporation, increased heat load or heat exchange);
3. Transfer of process water or partially treated process water to other concentrated phosphate plants (e.g., Cargill's Riverview facility or CF Industries Plant City facility) for consumptive use. The selected contractor shall be responsible for making any such agreements with such facilities;
4. Treatment of the process water via the double stage liming process with post air-stripping of the ammonia and transfer of the treated water to municipal waste water treatment plants for consumptive use or for further treatment and discharge (e.g., City of Tampa, Manatee County, etc.). The selected contractor shall be responsible for making any such agreements with wastewater treatment plants and end-users as may enhance the consumption of the process water to meet the consumption goals established in the water consumption plan.
5. Treatment of the process water via the double stage liming process with post air-stripping of the ammonia, and consumption of the treated water on-site (e.g., via spray irrigation or spray evaporation) without causing violations of groundwater and surface water discharge standards;
6. Treatment of the process water via the double-stage liming process with post air-stripping of the ammonia, and discharge of the treated water to surface waters in compliance with discharge standards and with pre-set limits on nutrient loadings established in the Administrative order and NPDES permit. Other nitrogen removal method(s) may be used to further reduce the ammonia nitrogen loading provided the treated water passes all toxicity and water quality criteria for discharge to fresh waters and marine waters.
7. Treatment of the process water via reverse osmosis technology in combination with pre-treatments that have been proven to work satisfactorily with phosphogypsum stack system process waters, and discharge of the treated permeate to surface waters meeting established water quality effluent limits which shall be diluted with well water or other waters as needed to mitigate any toxicity associated with the ionic imbalance.
8. Any other proven and tried process water consumption method or innovative treatment method that respondent can demonstrate to be effective in consuming or treating phosphogypsum stack system process waters as shall be approved by the DEP.

The selected contractor shall be responsible for selecting and developing suitable process water consumption methods, with the understanding that the DEP reviewers will give preference to proven and tried methods. Respondent(s) shall demonstrate the viability of the proposed method(s) when used to treat phosphogypsum stack system process water, and shall also demonstrate the reliability of producing treated water at a specified rate and in compliance with specified effluent water quality discharge criteria. Monitoring requirements and effluent limits for discharges from the site to surface waters are indicated in the Draft Order and NPDES Permit provided as Attachment J. It is anticipated that the Order and associated NPDES permit will be issued as a "final agency action" prior to, or concurrent with the execution of this contract. In the event that the Order and associated Permit is not issued as "final" prior

to execution of this contract, the selected contractor will be required to adhere to the effluent limits specified in the Order and associated permit, until such time that the final agency action permit is effective. Compliance with the terms and conditions of the Order and NPDES permit will be the sole responsibility of the respondent(s).

The selected contractor shall also be responsible for managing any waste generated through the treatment process from "cradle to grave". In this regard, respondent(s) shall clearly describe the characteristics of all waste products (e.g., lime treatment sludges, reverse osmosis reject, etc.), and shall detail their plan for handling/storage and disposal of all such waste products, including reclamation of sludge storage areas, and method of consumption or ultimate destination of all other generated wastes (including reverse osmosis reject).

The selected contractor must be capable of consuming water from the system at a minimum monthly average sustained rate of 0.8 to 1.2 million gallons per day (MGD), with provisions to increase the consumption rate, if needed, to accommodate above average rainfall or a faster than projected rate of dewatering from the closed gypsum stack. For example, the consumption rate may have to be increased by about 0.3 MGD for a twelve month period to accommodate 10 inches of rainfall above normal during calendar year 2004, in the event such excess rainfall were to occur. If consumption involves discharges to surface waters, a higher ranking will be given to proven methods that minimize ammonia nitrogen loadings to surface waters. In this regard, the selected contractor shall control the ammonia nitrogen loading in the discharge at all times in accordance with the NPDES permit requirements, or any other instruments issued by the DEP. The respondent(s) shall also provide in their cost proposal the compensation they require for water treatment to consistently comply with the following differing 15-day average ammonia nitrogen loading criteria in the discharge: 100 lb/day; 75 lb/day; 50 lb/day; and 20 lb/day.

The selected contractor shall be responsible for consuming all ponded process water within the impoundments, including collected rainfall from the contaminated watershed of the phosphogypsum stack system, and all water draining over time (i.e., during the contract period) from the pores of the phosphogypsum stack. It is anticipated that the ponded process water inventory will have declined to about 120 (MGal) by June 1, 2004 and, hence, respondent(s) shall assume in their pricing proposal that quantity to be the contractual quantity of ponded process water at the beginning of the project. (An adjustment to the price will be made based on an updated water inventory determined from available stage-storage relationships or pond soundings performed just prior to contract execution.) Considering the closure sequence specified in Section D below, and assuming normal rainfall and a net consumption rate on the order of 1.5 MGD during June 2004, and 1.0 MGD thereafter, it is projected that all ponded process water inventory would be depleted by late 2006. At that time, the drainable pore water from the stack would have likely declined from an estimated 500 MGal to less than 100 MGal. From that point forward, the selected contractor will not likely be able to sustain a consumption rate greater than about 0.2 to 0.3 MGD, i.e., the rate of pore water drainage from the closed gypsum stacks.

In addition, the selected contractor shall be responsible for handling, managing, and treating prior to discharge, if need be, all runoff water collected from the amended grassed slopes of the closed phosphogypsum stacks until the selected contractor is able to demonstrate compliance of the runoff from the grassed slopes with surface water discharge standards.

The Respondent shall base his price proposal on the expectation that rainfall at the site will be on the order of 50 to 55 inches over a twelve-month period. If the rainfall quantity exceeds 55 inches during any of three consecutive twelve month periods, then the selected contractor will be compensated for an additional: (i) 10.6 MGal for each inch of rainfall above 55 inches during the period of June 2004 through May 2005: (ii) 7.1 MGal for each inch of rainfall above 55 inches during the next 12-month period ending May 31, 2006 and (iii) 4.1 MGal for each inch of rainfall above 55 inches for the 12-month period ending May 31, 2007. Conversely, if the rainfall quantity is less than 50 inches during each of these 12-month periods, then the selected contractor will be debited equivalent quantities of water during each listed period for each inch of rainfall below 50 inches. Measurements of rainfall for payment purposes shall be based on the average of at least two strategically located rain gages at the site. Rainfall shall be measured and recorded daily by the Contractor subject to verification by the third party engineer.

The greatest uncertainty is perhaps in the total quantity of drainable pore water seeping from the closed phosphogypsum stacks during the contract period and in the rate of pore water dewatering. It would, therefore, be prudent for the Respondent to include in his pricing proposal an allowance for potential variations of plus or minus 20% in the total drainable pore water inventory and his estimate of the rate of stack dewatering. The DEP does not intend to measure the quantity of pore water draining from the closed stack, and the selected contractor shall assume all related uncertainties. If the Respondent believes that the pore water drainage may be higher than plus or minus 20%, he can propose in his response to this solicitation a method for quantifying that quantity in order to make an adjustment in price, subject to approval by the third-party engineer and the DEP.

C. Closure Construction

Lump sum contracts have already been awarded by the Receiver to an earthwork and a liner contractor (SHAW and COMANCO, respectively) **for closure of three of the four stack compartments** (New Gypsum Stack North Compartment, NGS-N, and both compartments of the Old Gypsum Stack, OGS-S and OGS-N). Construction is currently underway as these impoundments are being converted into lined water reservoirs that will be available for use for water management purposes through the duration of this contract. Related Drawings and Specifications prepared by the third-party engineer (Ardaman & Associates, Inc.) are located in the Background and Technical Documents on the Bureau of Mine Reclamation website. Allowances will be made by the DEP for all on-going closure work by the contractors currently on-site, but respondent(s) shall be responsible for ultimately **placing a protective soil cover on the lined slopes of these three reservoirs**, in accordance with a design prepared by the third-party engineer.

It is anticipated that the detailed closure design for the fourth stack compartment (New Gypsum Stack South Compartment, NGS-S), remaining unlined top gradient areas, gypsum stack side slopes and relief ditches, the perimeter seepage collection ditch system, and potentially chemical plant areas, in accordance with Rule 62-673, F.A.C., and all other applicable laws, rules and regulations, will be completed by the third-party engineer prior to award of this contract using conceptual and basic design features briefly described below and in the Background and Technical Documents located on the Bureau of Mine Reclamation's website. The selected contractor shall be responsible for completing the closure construction of the phosphogypsum stack system in accordance with Drawings and Specifications prepared by the third-party engineer who will be responsible for quality control and quality assurance testing during closure construction, and for inspection services throughout all phases of closure construction. The selected contractor shall also be responsible for the operations and maintenance of the closed phosphogypsum stack system and for post-closure care for the duration of this contract.

The closure construction phase of the New South Gyp Stack ("NGS-S") that this ITN covers will ultimately involve: (i) construction of approximately 100 acres of high density polyethylene (HDPE)-lined reservoir and/or conventional top gradient cover on remaining gypsum stack top areas including phosphogypsum earthwork that is expected to exceed 500,000 yd^3 of cut, and a corresponding fill quantity; (ii) construction of approximately 90 acres of grassed or sodded amended gypsum side slope cover; (iii) installation of more than 4 miles of seepage collection drains surrounding the phoshogypsum stack system and ponds; and (iv) closure of cooling and sludge ponds and potentially chemical plant areas covering more than 150 acres. Closure construction will encompass at a minimum:

1. Gypsum Stack Top Gradient. Closure of the NGS-S Compartment is planned to incorporate a large reservoir lined with an 80-mil High Density Polyethylene (HDPE) geomembrane (smooth and textured), with the lined slopes covered with soil; and closure of all other remaining smaller top gradient areas potentially used for disposal of plant debris in the future, or previously used for storage of lime treatment sludges. This work will involve covering these areas with gypsum fill and then placing a 40-mil to 60-mil HDPE liner on the prepared surface, in turn protected with a 2-foot thick grassed soil cover. Closure construction will generally involve site preparation, including excavation and disposal of treatment sludges and dewatering, grading, surface water control, moisture conditioning, dike construction, compaction, fine grading of surfaces to receive a synthetic liner, liner installation, soil cover construction atop the liner, inlet structure construction, and grassing.

2. Cooling Ponds and Sludge Ponds. Closure of the cooling ponds and sludge ponds which contain varying amounts of lime treatment sludges will likely involve grading of the outer dikes, desiccation of the sludge surface, gradually placing soil (with reinforcement) using light equipment to minimize mudwaving of the sludge, and installation of a 40-mil HDPE liner in turn protected with a 2-foot thick grassed soil cover. Closure of the cooling ponds and sludge ponds also includes installation of a buried drain system to collect seepage and construction of a 80 mil lined sump pond and runoff collection and transfer ditches.

3. Gypsum Stack Slope Areas. Closure of existing gypsum stack side slopes generally involves site preparation and temporary dewatering, grading, surface water control, amendment of the gypsum surface with dolomitic limestone, and grassing or sodding. Closure also involves the installation of buried drain systems to collect seepage, construction of lined runoff collection ditches, and construction of transfer pipelines for runoff routing and stormwater detention ponds.

4. Disposal of Plant Scale. If this work is selected by the DEP, designated solid waste material from the plant related to the production and conveyance of phosphogypsum and cooling pond water, including plant scale and radioactive waste material subject to licensure by the Department of Health, shall be disposed of by the Contractor on the phosphogypsum stack in areas specifically designated by the third party engineer. All such, waste material shall be encapsulated and covered with sluiced or slurried gypsum, during disposal, as needed to produce a suitable foundation for the liner and final cover.

Typical Drawings and Specifications for closure construction are referenced in the Background and Technical Documents on the Bureau of Mine Reclamation's website.

It is anticipated that by the time of the award of the contract that the third party engineer will have prepared detailed design and specifications for the installation of a soil-bentonite cut-off wall, along some sections of the alignment, which, upon installation, is expected to reduce groundwater inflow and, hence, consumption requirements by an average of about 0.15 MGD. It is anticipated that the selected contractor will be responsible for construction of the soil-bentonite cut-off wall as designed and specified by the site engineer.

D. Closure Sequence and Closure Schedule

It is imperative to reduce the watershed by expediting closure construction as much as possible in order to minimize the quantity of contaminated rainwater that will ultimately have to be treated or consumed. Higher rankings will be attributed to respondent(s) that can demonstrate their capability to adhere to, or accelerate the target closure schedule as outlined in this section.

The selected contractor shall make every effort to comply with the following phased closure milestones:

1. Close NGS- N and OGS-S compartments by mid-June 2004 (completed—**by others**);
2. Close OGS-N compartment by mid-August 2004 (on-going—**by others**);
3. Convert North Cooling Pond (NCP) to a dedicated Stage II lime treatment sludge disposal pond by mid-June 2004 (completed-**by others**);
4. Close NGS-S compartment and remaining top gradient areas by May 31, 2005;
5. Close NGS-N west slope and OGS west and south slopes by May 31, 2005;
6. Close NGS north and east slopes by May 31, 2006;
7. Close most of the South Cooling Pond (SCP), except for a small sump area if needed, by May 31, 2006;
8. Complete closure of all other areas and place grassed protective soil cover on all lined reservoir slopes at least one year prior to the end of the contract period.

Respondent(s) shall submit a proposed schedule including a bar chart showing the schedule for water consumption and all phased closure construction activities.

E. Innovative Proposal

The DEP does not have title to the property. However, DEP will consider innovative responses to this ITN that may include returning the site to a beneficial use, decommissioning of the plant site, or for any other purposes by the selected contractor or third parties. Such innovative responses may also involve the long-term ownership or control of the property. The award of the contract contemplated would not include acquisition of title to the property nor any costs, legal proceedings, or delays associated with such response. In the case that the proposal selected involves acquisition of title or control of the property, the Department will cooperate with the contractor's efforts to facilitate transfer of ownership and/or control in accordance with all applicable law. The schedule of work and deadlines or schedules under the scope of services, items A-D are not subject to and will not be modified to accommodate any efforts to obtain title, or delay in doing so.

F. Liquidated Damages

Liquidated damages are a necessary and critical component of any contract resulting from this solicitation. However, the terms and conditions of the liquidated damages will be developed as part of the negotiation process and included as part of the final contract.

REMAINDER OF PAGE INTENTIONALLY LEFT BLANK

ATTACHMENT 3
SCOPE OF SERVICES/PRICING ASSUMPTIONS

I. **Facility Maintenance and Operation.** The scope of Operation and Maintenance (O & M) services was described in detail in the original solicitation (see **Attachment 2**). In order to ensure that all BAFO's include all necessary elements of facility maintenance and operation, respondents must consider the following when developing their BAFO response:

- O&M Staffing
- Sample Collection and Analysis
- Permitting & Regulatory Compliance (not including defense of third party challenges to permits)
- Data Management and Analysis and Reporting (Groundwater Quality, Surface Water Discharge Quantity & Quality, Consumption & Water Inventory, etc.)
- Site Transportation
- Communications (web site, telephone, meetings, etc.)
- Public Relations
- Office Space (present at site)
- Garbage collection
- Mowing (includes not only the grassed areas within the phosphogypsum stack system, but also includes all grassed areas of the site property)
- Facilities Maintenance
- Process Water Management, Process Water Transfers and Runoff Routing
- Day to Day and Emergency Equipment
- Equipment maintenance, repairs and replacement, including electrical equipment
- Electricity, except for Process Water Consumption
- Utility services (potable water, well water and domestic wastewater)
- General insurance requirements (do not include specialty insurance/performance bond)
- Billing (including obtaining lien releases)
- Project Management
- Accounting
- Support Staff
- Purchasing
- Operation & Contingency Plan Preparation & Updates
- Site Security, Safety Training & Safety Compliance
- Inspections
- Any other item needed for O&M

II. **Process Water Consumption.** The scope of process water consumption services, which was described in detail in the original solicitation (see **Attachment 2**), is being revised by the following:

- If Reverse Osmosis (RO) is relied upon by respondent as a treatment method, the Department favors routing the RO-reject stream directly to the double-liming system while at the same time making provisions to accommodate treatment rate fluctuations and logistics if one of the treatment systems is down.
- Respondents need to decide on the fate of the current US Filter RO contract, i.e., whether to let the Receiver continue to administer the contract, have contract assigned to respondent, or terminate the contract. The Department's preference is for the selected

contractor to be assigned the current US Filter contract with the Receiver. If the respondent elects to terminate the US Filter contract during January 2005, a termination fee of $115,000 will be added to respondent's bid price. If the respondent elects to terminate the US Filter contract during February 2005, a termination fee of $45,000 will be added to respondent's bid price. The termination fee, if applicable, must be keyed by respondent on the BAFO Pricing Summary spreadsheet (**Attachment 4)** where the existing US Filter RO contract option is listed.

As of October 30, 2004, US Filter had discharged 59 million gallons (MGal) of permeate out of the 146 MGal contractual quantity, leaving only 87 MGal under the current contract. It is estimated that by January 1, US Filter would have discharged another 37 MGal (assuming about 0.6 MGD), leaving only about 50 MGal from the original 146 MGal contractual quantity. Respondents shall assume that they would be assigned 50 MGal only from the current US Filter contract if they elect to continue with the contract.

- Respondents shall include the cost of power consumed in treating water in the water consumption budget category. (Also respondents must include the cost of power consumption associated with use of the US Filter RO System in the water consumption budget category, if respondent elects to continue with the existing US Filter contract, i.e., add the cost of power to the $17.95 per thousand gallons US Filter existing base contract charge).
- Respondents need to specify their estimated total quantity of process water and contaminated runoff to be consumed during the contract period, including the quantity to be consumed by the existing US Filter Contract (if respondent elects to continue with that contract). Assume that the respondent will take over the site on January 1, 2005 when the total combined ponded process water and pore water inventory is tentatively assumed to be on the order of 620 million gallons and add net rainfall (less evaporative losses) on the contaminated watershed throughout the closure period. Do not rely on Engineer's water balance results in making the projections needed to determine the total quantity of water that has to be consumed during the contract period. For purposes of the BAFO, do not use a consumption quantity less than 1000 million gallons, and assume that 75 % of the total quantity will have to be consumed during the first two years of the contract. An adjustment to the price will be made based upon an updated pond water and pore water inventory to be made by the Engineer prior to contract execution.
- Respondents to include the cost of Operation and Maintenance (including power consumption) of the Spray Evaporation System to be constructed in the NGS-N lined reservoir, and their estimated consumption quantity using the proposed spray evaporation system. The proposed system will be installed by a contractor working for the Receiver (outside this contract). Assume that the system will be available for use by May 2005.
- The Department will not approve in-situ treatment of process water except possibly in ponds that already contain lime treatment sludge (i.e., the NCP and SCP).
- Respondents to specify consumption method(s) and provide cost of consumption during the first two years for two alternatives loading rates of water discharged to Bishop Harbor: (i) a 30-day rolling average ammonia nitrogen loading limit of 50 lbs/day; and (ii) a 30-day rolling average ammonia nitrogen loading limit of 20 lbs/day. Department will ultimately select the allowable loading. Separate and apart from regulatory compliance issues, no payment will be made if the 50 lbs/day loading limit is exceeded. If the Department selects the 20 lbs/day loading limit, and the contractor produces water with a loading between 20 and 50 lbs/day, payment will be made at the lower 50 lbs/day unit price multiplied by 0.9 (i.e., at 90% of the unit price listed for the higher loading). These loading provisions will become effective 30 days after the selected respondent begins operations at the site. The consumption methods during the first two years may include one or more of the following: spray evaporation; discharge of reverse osmosis permeate (diluted, as needed, with a small quantity of well water or double-lime treated water); and

discharge of double-lime treated and aerated (i.e., air-stripped) water. Respondents need to expand on how they propose to comply with the ammonia nitrogen loading limit(s) if awarded the contract.

- There shall be no discharges of treated process water after Year 2, except for diluted RO permeate having an ammonia nitrogen concentration of less than or equal to 1 mg/l, and a total nitrogen concentration of less than or equal to 2 mg/l.
- If spray irrigation of treated water is selected as a consumption method during Years 3 through 5, respondent shall specify the treatment method, controlled average spray irrigation rate (in inches/year), and area(s) where the treated water will be sprayed so as not to cause violations of the existing Zone of Discharge.

III. **Closure Construction.** The scope of closure construction services, which was described in detail in the original solicitation (see **Attachment 2** and all ITN information previously posted on the website), is being revised by the following:

- Respondents are expected to complete closure construction in accordance with the specifications and design drawings prepared by the Engineer.
- The proposed soil-bentonite cut-off wall ("slurry wall") will be constructed by a contractor working for the Receiver (outside of this contract). The cut-off wall, which will curtail groundwater inflow by about 0.15 MGD, is expected to be completed by April 2005. The curtailment of seepage inflow has already been taken into account in the water balance projections made by the Engineer.
- The Department is not in a position to assist the respondents in locating a suitable borrow pit for soil fill, but encourages respondents to locate a borrow source close to the site. Respondents shall assume that there is no on-site earthen fill available for use in closure construction, and, hence, respondents shall assume that soil fill will have to be obtained from off-site borrow sources. The availability of "dirty borrow" from dredge spoil at Port Manatee for use in capping lime sludge areas (before installation of the liner and protective soil cover) may be an option that the Department will consider, but this option should not be used in responding to the BAFO.
- The Department will require sodding of soil cover on lined reservoir slopes and sodding of soil cover in lined ditches. On the other hand, gypsum slopes and cooling pond caps can either be sodded or seeded. Note, however, that the contractor will have to incur all grassed area maintenance and replanting costs that are needed to establish a healthy grass cover, and that the respondent will be responsible for handling and treatment of runoff from grassed areas until the runoff water quality is suitable for discharge.
- Design changes for the soil cover on the lined reservoir slopes and on the gypsum stack crest roads are detailed on two Drawings (R1 and R2), presented as **Attachment 6** in this Request for Best and Final Offers, to assist in preparation of the BAFO.
- About 75,000 cubic yards of gypsum cut (bank volume) will be excavated by others (outside the contract) from the slopes of the gypsum stack (from ITN- previously designated cut slope areas) and the gypsum will be relocated and placed in the NGS-S construction area as access roads for dewatering ditches as part of preparatory closure work currently underway. Moreover, as part of the preparatory work to be completed by January 1, the quantity of lime treatment sludges that has to be excavated from the NGS-S compartment and relocated to the NCP will be reduced significantly, to an estimated 5000 cubic yards.
- BAFO, **Attachment 4** – BAFO Pricing Summary spreadsheet includes updated Engineer quantity estimates (liner, soil cover, drain composite, etc.) which are not inclusive of all materials needed for closure construction (e.g., filter fabric, reinforcing geotextile, gravel, pipe, etc.). These estimates by the Engineer are preliminary neat in-place quantities measured from Drawings and do not include any adjustment for bulking factor or shrinkage, additional fill needed to compensate for settlement and compaction,

mudwaving of soft materials, liner overlaps, waste, liner buried in anchor trenches, increased areas due to sloping surfaces, etc. Respondents are required to independently estimate all quantities listed on the spreadsheet and to perform an independent quantity take-off without relying in any way on Engineer's estimate. **Failure of a respondent to submit an independent quantity estimate will be cause for rejection of respondent's BAFO.**

IV. **Closure Sequence and Closure Schedule.** Respondents shall make every effort to comply with the closure sequence and closure schedule milestones as detailed in the original solicitation (see **Attachment 2**), and as revised by the following:

- The NGS-N, OGS-S and OGS-N lined reservoirs have already been completed by others (outside this contract).
- The NCP has already been converted to a dedicated Stage II lime treatment sludge disposal pond, but because water from that pond does not yet meet discharge standards, the NCP is still considered to be within the watershed of the process water system. Closure of the NCP may be postponed until Year 5 if needed to accommodate water/sludge management, but respondent will have to manage and treat any rainfall-runoff that may become contaminated as a result of postponing closure of the NCP.
- Closure of the NGS-S compartment as a lined reservoir and closure of the remaining top gradient stack areas shall be completed by June 30, 2005.
- Closure of the NGS-N west slope and OGS west and south slopes shall be completed by July 31, 2005, with provisions to produce discharge quality runoff from these slopes 6 months later.
- Closure of the NGS north and east slopes shall be completed by May 31, 2006, with provisions to produce discharge quality runoff from these slopes 6 months later.
- Closure of the south compartment of the SCP and construction of a 10-acre lined sump pond (within part of the footprint of the south cooling pond) shall be completed by May 31, 2006.
- Closure of the north compartment of the SCP shall be completed by May 31, 2007, if feasible. By that time, it would also be desirable to reclaim at least 50% of the contributing watershed from the plant site, and to flush and clean the NGS-N lined reservoir (currently being used for process water storage).
- Complete closure of all other areas and place grassed protective soil cover on all lined reservoir slopes at least one year prior to the end of the contract period.

Respondents shall submit a proposed schedule in the form of a bar chart showing all phased closure construction activities.

V. Innovative Proposals

- The Innovative Proposals described in the response to the original ITN are not being considered in the evaluation of the BAFO. However, the Department in its sole discretion may support the efforts of the successful candidate to address the site problems outside the Scope of Services and to promote the beneficial re-use of the property.

ADDITIONAL PRICING CONSIDERATIONS

Respondents shall refer to instructions included in this attachment before completing the BAFO Pricing Summary spreadsheet provided as Attachment 4.

In response to questions raised by one of the respondents on details regarding the NGS-S compartment top cap area soil cover drain, and details regarding the relief ditch inlet structure, respondents can assume the following:

- Per Section H.1, Paragraph 4 of the ITN Background Information document, "a small filtration drain, consisting of a slotted, corrugated HDPE collector pipe surrounded by silica gravel wrapped in a non-woven filter fabric, or a drain network constructed using fabric-wrapped HDPE panel drains, will be installed atop the HDPE liner along the low area of the cap and will discharge into the inlet structure to drain the soil cover". Detailed design of the filtration drain system has not been finalized. Respondents can assume that a total of 500 lineal feet of filtration drain will be required, incorporating a 6-inch nominal diameter slotted, corrugated HDPE collector pipe centered within a 2-foot thick gravel drain having average width of 5 feet wrapped in a 12 oz/sy non-woven needle-punched polypropylene or polyester filter fabric. (The cap area containing the filtration drain will not be disturbed during gypsum borrow operations associated with disposal of plant scale in the relief ditch, if the FDEP elects that option).

- As stated in Section H.2, Paragraph 1 of the ITN Background Information document, closure of the NGS-N relief ditch will include installation of a new inlet structure at the west end. Detailed design of the inlet structure has not been finalized. Respondents can assume that the inlet will consist of a 12-inch diameter SDR 11 HDPE pipe installed in a backfilled excavation through the gypsum wall at the west end of the relief ditch with a molded 12-inch diameter 90 degree elbow and 12-inch HDPE riser anchored in a reinforced concrete base (similar, but substantially smaller that the inlet structures recently installed for Phase II closure of the OGS compartments; drawings for which are available on the FDEP's ITN website). Alternatively, respondents could include a $75,000 allowance for the NGS-N relief ditch inlet structure provided they state that they did so in their BAFO.

As to the cost of transporting the plant scale, respondents shall assume that 25,000 cubic yards of material may have to be transported from a location near the plant site to the relief ditch disposal site on the gypsum stack.

As part of the BAFO submittal, and in preparation for negotiations with the successful firm, respondents shall **provide the assumed prevailing cost for the liner resin, fuel, lime, and power, as well as the assumed inflation or escalation rate during the contract period. Moreover, respondents shall provide their mark-up rate on subcontracted services.**

REMAINDER OF PAGE INTENTIONALLY LEFT BLANK

ATTACHMENT 4

BAFO PRICING SUMMARY
ITN 2005002C

ITEM	DESCRIPTION	TOTAL (Years 1-5)	Years 1-2	Years 3-5	Years 6-10 If Contract is Renewed
A. OPERATION AND MAINTENANCE					
A1	Site Operation and Maintenance (Including Process Water and Runoff Management, Inspections, Site Security, Mowing, Repairs, and Post-Closure Care & Maintenanace)	$ -	$ -	$ -	$ -
A2	Utilities (Power, excluding power used in process water consumption, Water, Domestic Wastewater, Refuse Collection, etc.)	$ -	$ -	$ -	$ -
A3	Safety Training and Safety Compliance	$ -	$ -	$ -	$ -
A4	Groundwater Monitoring Plan Implementation	$ -	$ -	$ -	$ -
A5	Surface Water Monitoring Plan Implementation	$ -	$ -	$ -	$ -
A6	Project Coordination, Direction & Reporting	$ -	$ -	$ -	$ -
A7	Liability Insurance Coverage (Including Pollution Liability)	$ -	$ -	$ -	$ -
	ITEM A SUBTOTAL	$ -	$ -	$ -	$ -

B. PROCESS WATER CONSUMPTION
(Including Power Usage, Staffing & Overhead)

	Years 1 & 2 - Department's Option 1 With ≤ 20 lb NH3-N/day		BAFO BID PRICE	Unit Cost $/1,000 Gal
	Consumption Method	**Projected Quantity (Mgal)**		
B1	Spray Evaporation	0	$ -	$ -
	USFilter R.O. (Existing Contract)	0	$ -	$ -
	New R.O. (with Reject Treated by Double-Lime)	0	$ -	$ -
	Double-Lime + Aeration (Including R.O. Reject)	0	$ -	$ -
	Total Consumption Years 1 & 2 (Option 1)	0	$ -	$ -

	Years 1 & 2 - Department's Option 2 With ≤ 50 lb NH3-N/day		BAFO BID PRICE	Unit Cost $/1,000 Gal
	Consumption Method	**Projected Quantity (Mgal)**		
B1	Spray Evaporation	0	$ -	$ -
	USFilter R.O. (Existing Contract)	0	$ -	$ -
	New R.O. (with Reject Treated by Double-Lime)	0	$ -	$ -
	Double-Lime + Aeration (Including R.O. Reject)	0	$ -	$ -
	Total Consumption Years 1 & 2 (Option 2)	0	$ -	$ -

	Consumption During Years 3-5 (No Discharge Except R.O.)	Specify Treatment Method:	BAFO BID PRICE	Unit Cost $/1,000 Gal
B1	Spray Evaporation of Treated Water	0	$ -	$ -
	Spray Irrigation with Treated Water	0	$ -	$ -
	Transfer Treated Water to WWTP	0	$ -	$ -
	R.O. Discharge	0	$ -	$ -
	Other (Specify):	0	$ -	$ -
	Total Consumption Years 3-5	0	$ -	$ -
	TOTAL CONSUMPTION QUANTITY (Ensure Total is Not Less Than 1,000 Mgal)	0		

	Additional Compensation per Inch of Annual Rainfall > 55"			BAFO BID PRICE	Unit Cost $/1,000 Gal
B2	Year 1	10.6 Mgal / inch	Option 1 with ≤ 20 lb NH3-N/day	$ -	$ -
			Option 2 with ≤ 50 lb NH3-N/day	$ -	$ -
	Year 2	7.1 Mgal / inch	Option 1 with ≤ 20 lb NH3-N/day	$ -	$ -
			Option 2 with ≤ 50 lb NH3-N/day	$ -	$ -
	Year 3	4.1 Mgal / inch	Option 1 with ≤ 20 lb NH3-N/day	$ -	$ -
			Option 2 with ≤ 50 lb NH3-N/day	$ -	$ -
B3	**Credit per Inch of Annual Rainfall < 50"**				
	Year 1	10.6 Mgal / inch		$ -	$ -
	Year 2	7.1 Mgal / inch		$ -	$ -
	Year 3	4.1 Mgal / inch		$ -	$ -
B4	Allowance for 20% Variation in Drainable Pore Water Volume & Rate			$ -	
	Respondent Plans to Quantify Drained Pore Water for Supplemental Compensation ?			Type Yes or No Above	If Yes, a contingency allowance of $1,000,000 will be added to the subtotal
	If Yes, Specify Method:				

C. CLOSURE CONSTRUCTION

	Respondent's Estimated Quantities		Engineer's Estimate	Respondent's Estimate	BAFO BID PRICE	Unit Costs	
C1	NGS-N, OGS-S & OGS-N						
	Soil Cover	cy	270,000	0	$ -	$ -	
	80-Mil HDPE Liner	sf	175,000	0	$ -	$ -	
	Drain Composite	sy	50,000	0	$ -	$ -	
	Sodding (Soil Slope Cover)	ac	40	0	$ -	$ -	
	Seed or Sod (Soil Crest Cover)	ac	4	0	$ -	$ -	ITEM C1 SUBTOTAL
	Other Ancillary	lump	lump	lump	$ -	-	$ -
C2	NGS-S Compartment						
	Sludge Excavation	cy	5,000	0	$ -	$ -	
	Gypsum Fill	cy	400,000	0	$ -	$ -	
	80-Mil HDPE Liner	sf	3,000,000	0	$ -	$ -	
	60-Mil HDPE Liner	sf	750,000	0	$ -	$ -	
	40-Mil HDPE Liner	sf	500,000	0	$ -	$ -	
	Soil Cover	cy	200,000	0	$ -	$ -	
	Drain Composite	sy	35,000	0	$ -	$ -	
	Sodding (Soil Slope Cover)	ac	18	0	$ -	$ -	
	Seed or Sod (Cap Areas, Relief Ditch & Crest Roads)	ac	24	0	$ -	$ -	
	Outlet Structures	lump	lump	lump	$ -	-	NGS-S SUBTOTAL
	Other Ancillary	lump	lump	lump	$ -	-	$ -
	Re-Closure of NGS-N Relief Ditch if Used for Disposal of Plant Scale (at FDEP's Option)						
	60-Mil HDPE Liner	sf	500,000	0	$ -	$ -	
	Soil Cover	cy	50,000	0	$ -	$ -	
	Sodding	ac	12	0	$ -	$ -	
	Outlet Structure Modification	lump	lump	lump	$ -	-	
	Gypsum Fill (Encapsulate Scale)	cy	75,000		$ -	$ -	
	Gypsum Borrow Area Work						
	Remove & Restore Soil Cover	cy	25,000		$ -	$ -	
	Remove & Replace 40-Mil Liner	sf	350,000		$ -	$ -	
	Restore Grass (Seed or Sod)	ac	8		$ -	$ -	OPTION SUBTOTAL
	Other Ancillary	lump	lump	lump	$ -	-	$ -
C3	Stack Slopes and Ditches						
	Gypsum Earthwork	cy	100,000	0	$ -	$ -	
	80-Mil HDPE Liner	sf	800,000	0	$ -	$ -	
	60-Mil HDPE Liner	sf	700,000	0	$ -	$ -	
	Drains	lf	12,500	0	$ -	$ -	
	Soil Cover	cy	150,000	0	$ -	$ -	
	Soil Grassing						
	Seeding (Stormwater Ponds)	ac	16	0	$ -	$ -	
	Sodding (Runoff Ditches)	ac	19	0	$ -	$ -	
	Amended Gypsum Grassing ☐ Seeding or ☐ Sodding	ac	55	0	$ -	$ -	ITEM C3 SUBTOTAL
	Other Ancillary	lump	lump	lump	$ -	-	$ -
C4	Cooling/Sludge Ponds & Ditches						
	Earthwork (Soil)	cy	250,000	0	$ -	$ -	
	80-Mil HDPE Liner	sf	1,000,000	0	$ -	$ -	
	40-Mil HDPE Liner	sf	4,500,000	0	$ -	$ -	
	Drains	lf	9,000	0	$ -	$ -	
	Soil Cover	cy	400,000	0	$ -	$ -	
	Soil Grassing						
	Seeding (Cap Areas)	ac	130	0	$ -	$ -	
	Sodding (Runoff Ditches)	ac	20	0	$ -	$ -	ITEM C4 SUBTOTAL
	Other Ancillary	lump	lump	lump	$ -	-	$ -

ITEM C SUBTOTAL	$ -
D. TOTAL PRICE	
TOTAL PRICE (A+B+C) for Department's Option 1	
TOTAL PRICE (A+B+C) for Department's Option 2	
E. & F. MISCELLANEOUS	
E2 Transport Plant Scale to Stack (Assume 25,000 cy)	$ -
F5 Florida Sales Tax	$ -

ATTACHMENT 5
EVALUATION CRITERIA

Item	Description	Maximum Raw Score Possible[1]	Evaluator's Score (For DEP Purposes Only)	Weight Factor	Maximum Points Possible
1.	**Qualifications**				
	a. Prime and Subcontractor Qualifications	5		4	20
	b. Project Organization	5		2	10
	c. Program/Project Manager & Team Leader	5		3	15
	d. Operation and Maintenance Team	5		3	15
	e. Water Consumption Team	5		3	15
	f. Closure Construction Team	5		3	15
2.	**Scope of Services**				
	a. Operation and Maintenance	5		2	10
	b. Water Consumption	5		6	30
	c. Closure Construction and Closure Schedule	5		2	10
3.	**Proposed Pricing**[2]				
	a. Cost of Operation and Maintenance	5		2	10
	b. Cost of Water Consumption				
	1. Option 1 (≤ 20 lb NH3-N/day)	5		1	5
	2. Option 2 (≤ 50 lb NH3-N/day)	5		1	5
	c. Cost of Closure Construction	5		2	10
	d. Total Proposed Price				
	1. Option 1 (≤ 20 lb NH3-N/day)	5		6	30
	2. Option 2 (≤ 50 lb NH3-N/day)	5		4	20
	Total Maximum Points Possible:				220

Notes:

1 Evaluation points (raw scores) awarded for these components will be based on the following point structure:

Scoring Range: 1 to 5

1 = Lowest Possible Raw Score
5 = Highest Possible Raw Score

2 Rather than awarding the maximum points to the lowest cost, the evaluation process will consider the probability of timely completion of the project and value received by the DEP relative to the cost.

REMAINDER OF PAGE INTENTIONALLY LEFT BLANK

ATTACHMENT 6

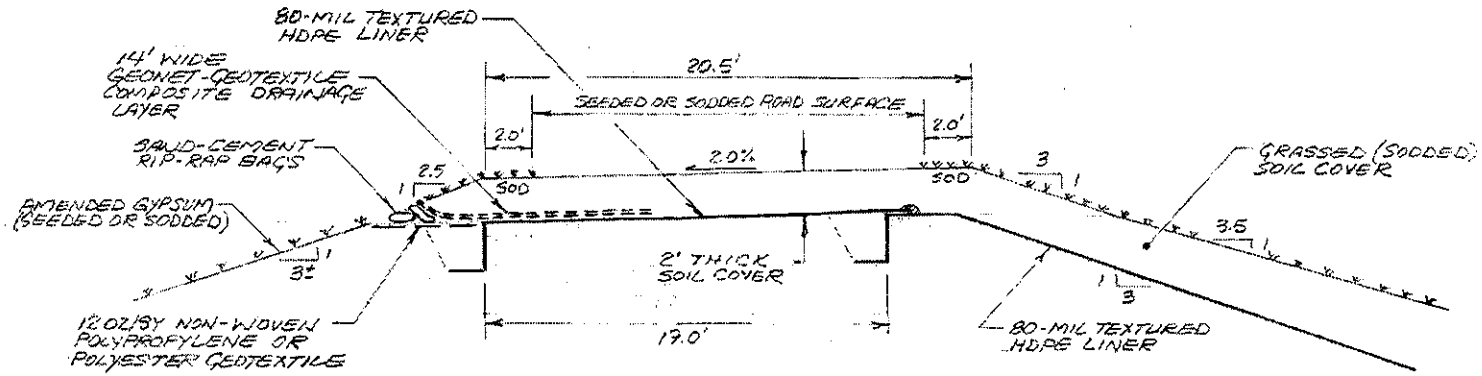

DETAIL 3 - TYPICAL EXTERIOR DIKE CREST
SCALE: 1" = 5'

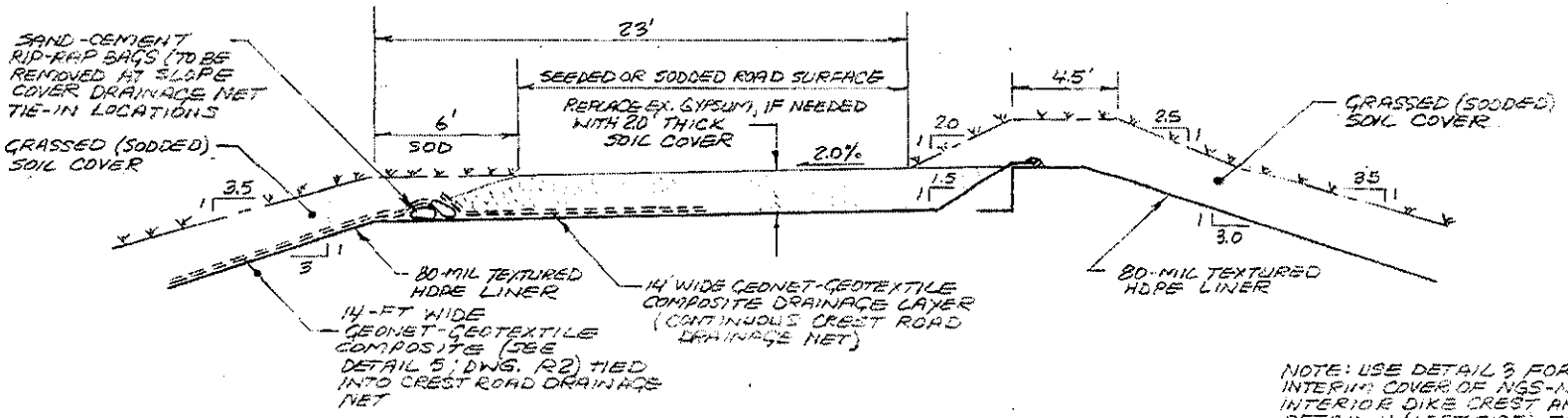

DETAIL 4 - TYPICAL INTERIOR DIKE CREST
SCALE: 1" = 5'

NOTE: USE DETAIL 3 FOR INTERIM COVER OF NGS-N INTERIOR DIKE CREST AND DETAIL 4 (LEFT SIDE) FOR FINAL CLOSURE IF RELIEF DITCH IS USED FOR PLANT SCALE DISPOSAL.

REVISION	DATE	DESCRIPTION	APPR'D	REVISION	DATE	DESCRIPTION	APPR'D

Ardaman & Associates, Inc.
Geotechnical, Environmental and Materials Consultants
8008 S. Orange Ave., Orlando, FL 32809
TEL 407/[illegible] FAX 407/[illegible] C.A.N. [illegible]

Florida
Department of Environmental Protection
and, Louis J. Timchak, Jr. – Receiver

FDEP ITN NO. 2004070C
PINEY POINT FACILITY
MANATEE COUNTY, FLORIDA

CLOSURE DETAILS

DRAWING NO. R1

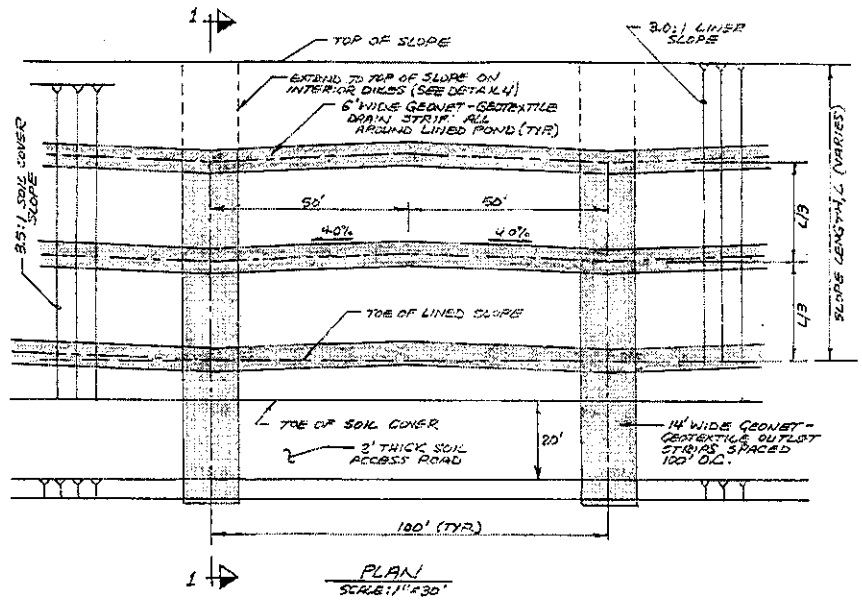

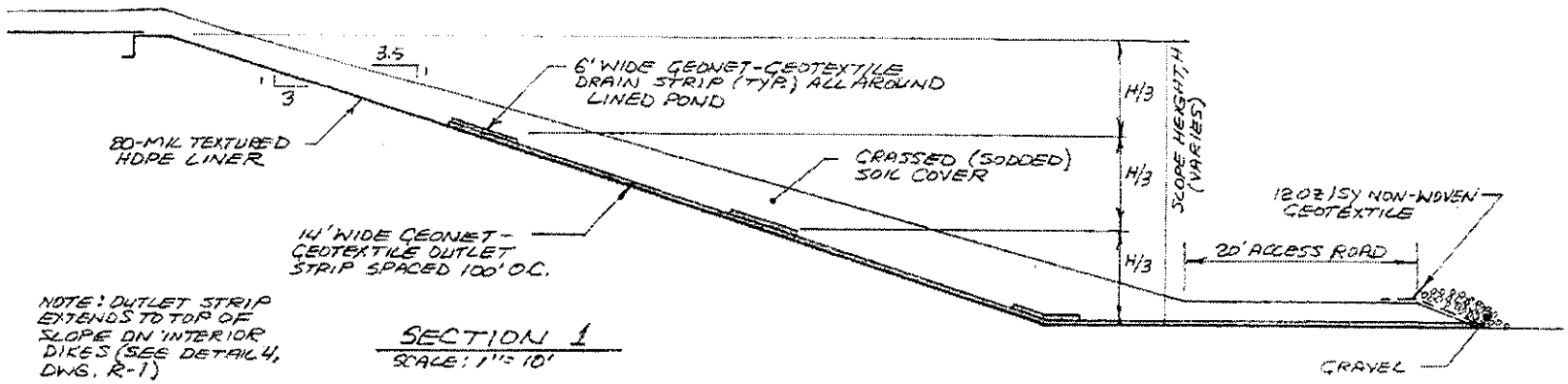

DETAIL 5 - SLOPE COVER

REVISION	DATE	DESCRIPTION	APP'D
1		ISSUED FOR REVIEW	

Ardaman & Associates, Inc.
Geotechnical, Environmental and Materials Consultants
8008 S. Orange Ave., Orlando, FL 32809
TEL 407/855-3860 FAX 407/859-8121 C.A.N. 3930

Florida
Department of Environmental Protection
and, Louis J. Timchak, Jr. – Receiver

FDEP ITN NO. 2004070C
PINEY POINT FACILITY
MANATEE COUNTY, FLORIDA

CLOSURE DETAILS

DRAWING NO. R2

ATTACHMENT 7
BAFO CHECKLIST

To insure that your response package can be accepted, please be sure the following items are fully completed and enclosed:

1. _____ Transmittal letter which includes the name, title, address, telephone number and email address of the respondent's official contact and an alternate, if available, who have the authority to bind the respondent.

2. _____ BAFO Response (See Attachment **1**, Section 1.18.B) which is limited to no more than one hundred forty (140) pages as described below:

Item	Description	Page Limitation
a.	Résumé/Experience of Personnel	100 Pages
b.	Qualifications of Respondent/Subcontractor in Meeting Areas of Expertise Needed (including letters of commitment from new subcontractors proposed, if applicable)	
c.	Organizational Chart	
d.	Key Staffing Assignments	
e.	Detailed Project Proposal/Scope of Services	35 Pages
f.	Proposed Pricing (excluding Attachment 4)	5 Pages
Total BAFO Response Page Limit (excluding Attachment 4):		140 Pages

3. _____ Completed BAFO Pricing Summary spreadsheet (**Attachment 4**). Did you complete all of the ***yellow highlighted*** cells? Did you include your independent quantity take-off estimates? **Failure of a respondent to submit independent quantity take-off estimates will be cause for rejection of the respondent's BAFO.**

4. _____ Ten (10) signed hard copies (one original and 9 photocopies) of the entire response must be submitted to the DEP in accordance with Attachment 1, Section 1.6.

5. _____ Two (2) electronic copies, on Compact Disks in Portable Document Format (pdf), of the entire response must be submitted to the DEP in accordance with Attachment 1, Section 1.6.

This checklist (**Attachment 7**) is provided merely for the convenience of the respondent and may not be relied upon in lieu of the instructions or requirements of the Request for Best and Final Offers.

REMAINDER OF PAGE INTENTIONALLY LEFT BLANK