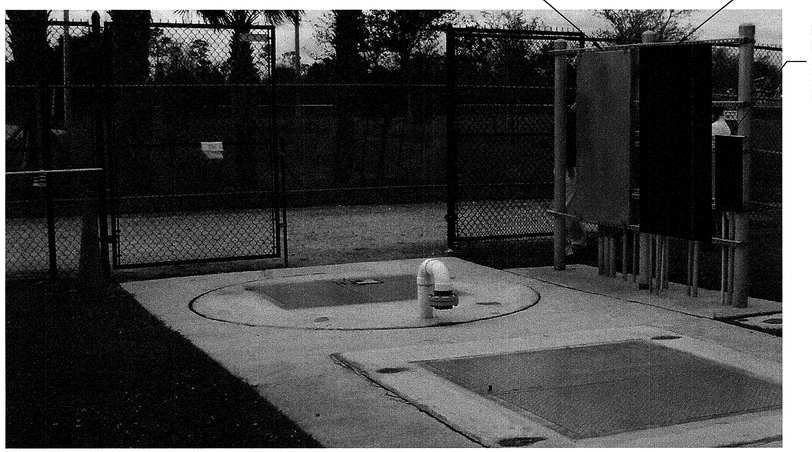

NOTE:
SEE SHEET E–1 FOR PLAN VIEW.
SEE SHEET E–4 FOR CONDUIT AND WIRING.

PROPOSED MODIFICATIONS AT THE EXISTING LIFT STATION

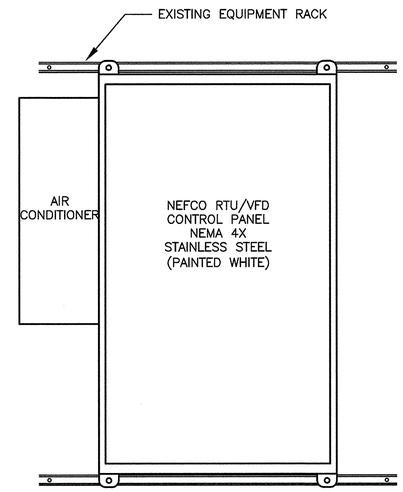

NOTES:
SEE SHEET E–5 FOR 120/240 VAC SCHEMATIC.
SEE SHEET E–6 FOR VFD SCHEMATIC INTERFACE TO THE EXISTING LIFT STATION CONTROL PANEL.

PROPOSED NEFCO RTU/VFD PANEL

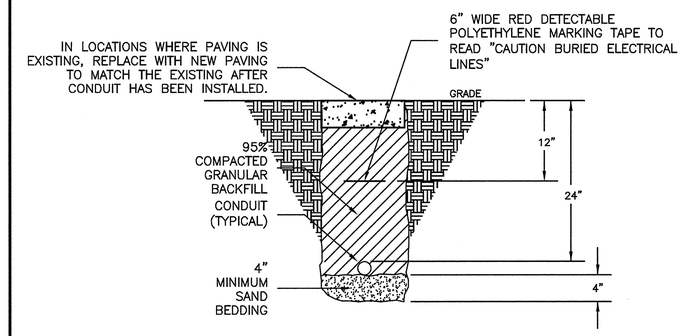

TRENCHING DETAIL

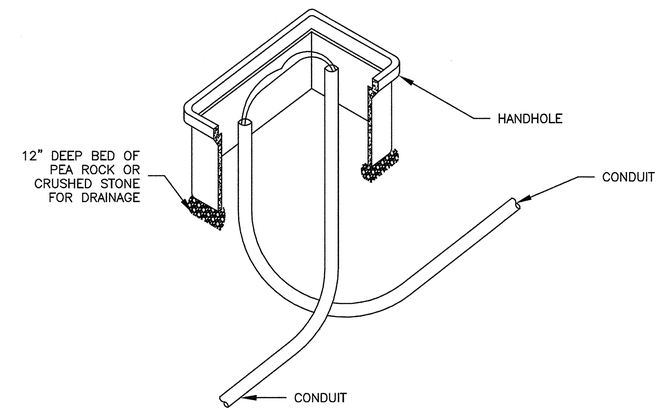

HANDHOLE DETAIL (NON–TRAFFIC RATED)

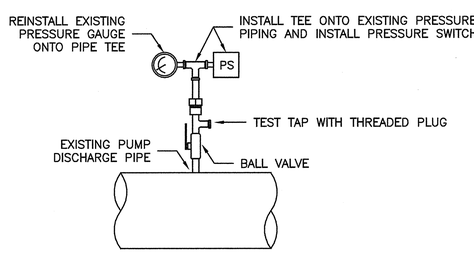

NOTE: ALL INSTRUMENT VALVES AND FITTINGS SHALL BE 316 STAINLESS STEEL

PUMP DISCHARGE PRESSURE SWITCH DETAIL

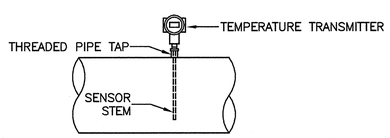

NOTE: ALL INSTRUMENT FITTINGS SHALL BE 316 STAINLESS STEEL

TEMPERATURE TRANSMITTER DETAIL

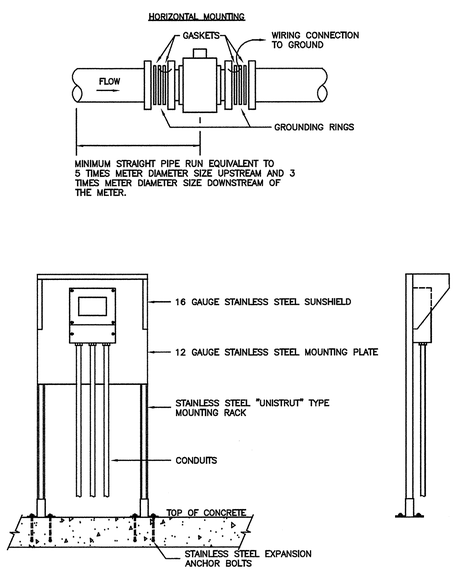

FLOW METER DETAIL

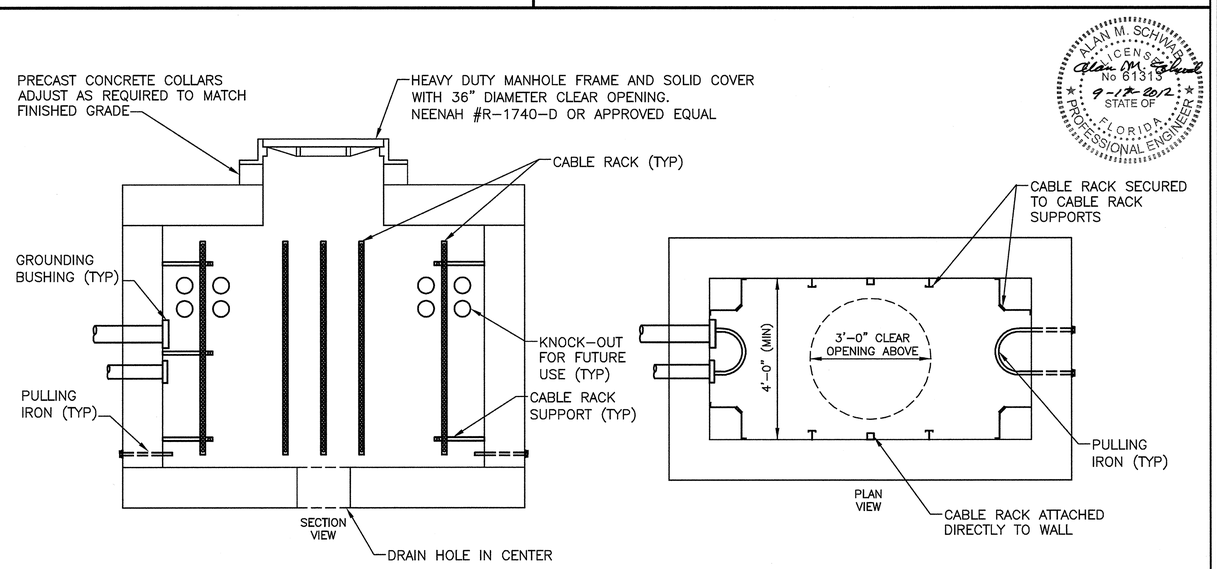

ALAN M. SCHWAB LICENSE No 61313 STATE OF FLORIDA PROFESSIONAL ENGINEER
9-17-2012

HANDHOLE DETAIL (TRAFFIC RATED)

REV#	DATE	DESCRIPTION	BY

NOT VALID FOR CONSTRUCTION UNLESS SIGNED AND DATED.

ALAN M. SCHWAB, 61313

WADE TRIM
3790 Dixie Highway NE, Suite D
Palm Bay, FL 32905
321.728.3389 FAX: 321.728.3393
Certificate of Authorization No.: 3852
www.wadetrim.com
Building relationships on a foundation of excellence

SWA BIOSOLIDS PROCESSING FACILITY
INDUSTRIAL WASTE FORCE MAIN PROJECT
PALM BEACH COUNTY, FLORIDA

ELECTRICAL DETAILS
SWA BIOSOLIDS PROCESSING FACILITY

ISSUED FOR:	DATE:	BY:
75% REVIEW	05/02/12	CEM
100% REVIEW	06/15/12	CEM
FINAL DESIGN	7–6–12	CEM
ENV. PERMITS	9/17/12	CEM

JOB NO. NEF2001–01L

SHEET E–2

© Wade Trim Group, Inc.

PROJECT MANAGER– FIELD BOOK INFORMATION–
C:\PW_WORK\MHORNE\D0346037\EDIT–PLTS–ELECTRICAL_DETAILS E–02.DWG – E–2 – PLOTTED 9/14/2012 11:04 AM BY HORNE, MICHAEL