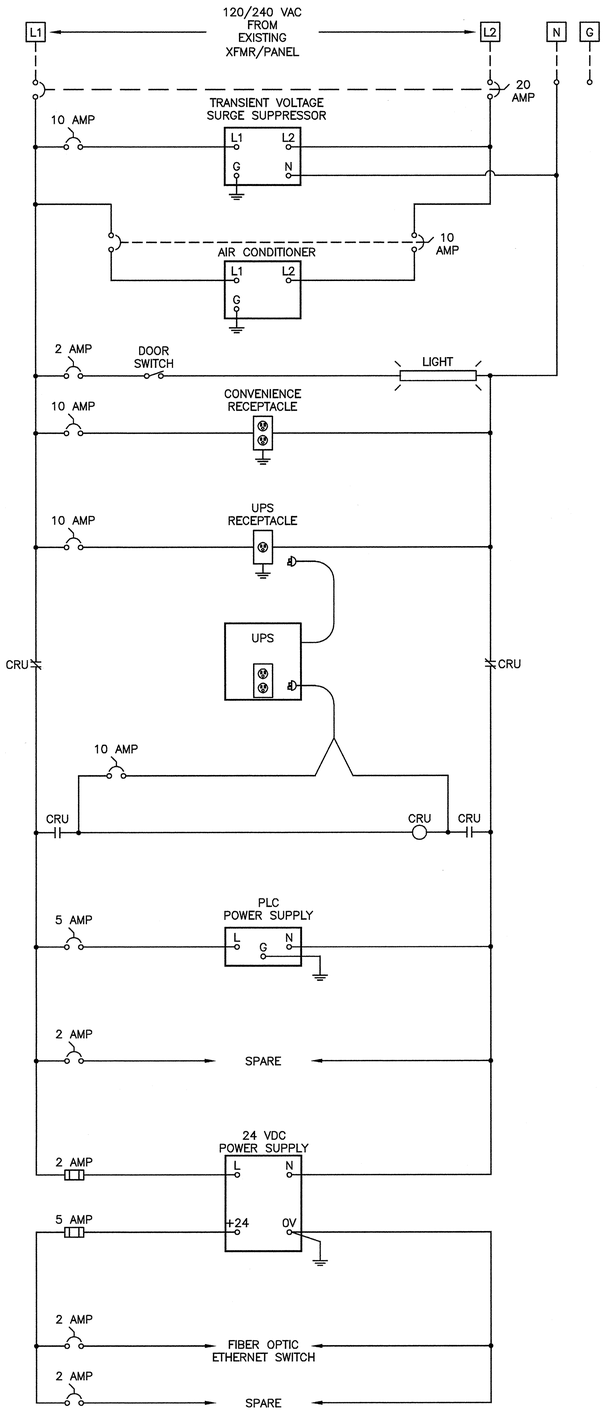

NEFCO LIFT STATION RTU/VFD PANEL POWER SCHEMATIC

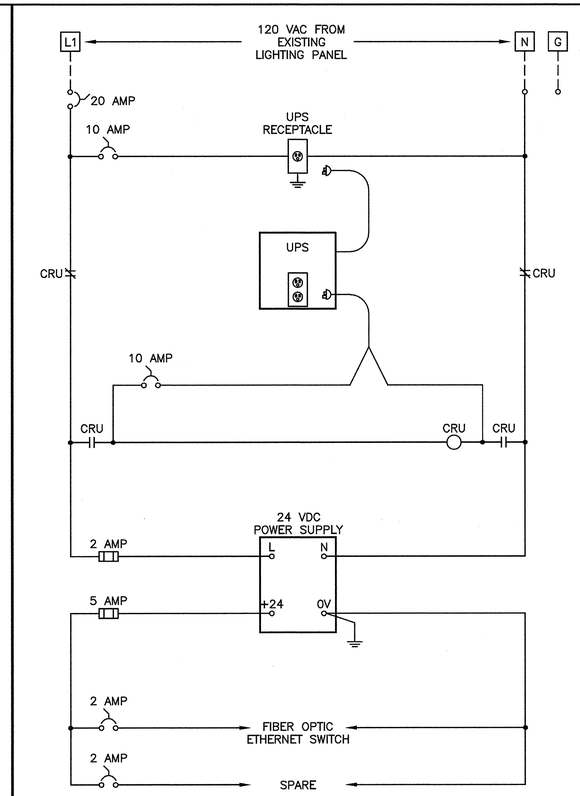

NEFCO BUILDING FIBER OPTIC SWITCH PANEL POWER SCHEMATIC

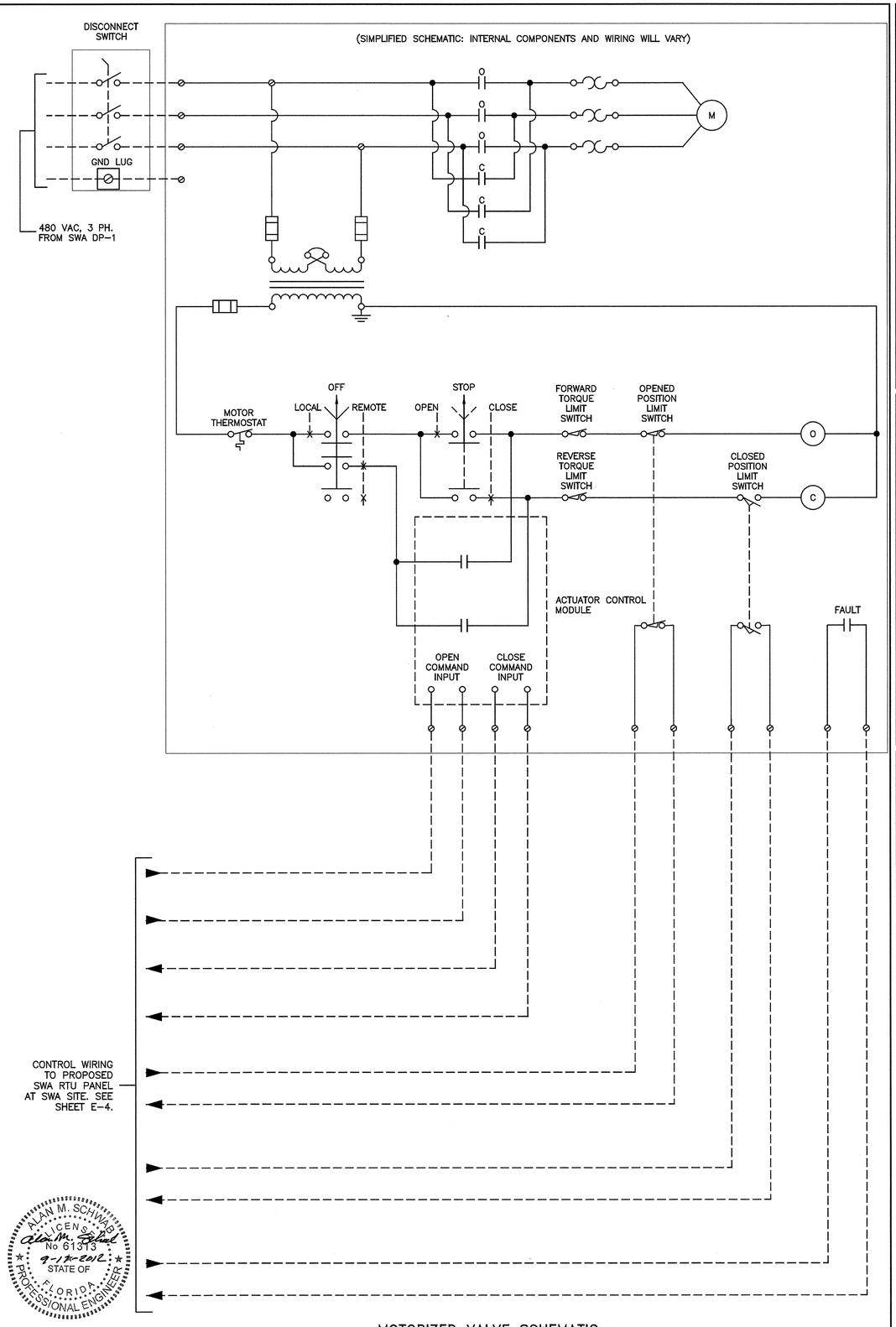

MOTORIZED VALVE SCHEMATIC

ALAN M. SCHWAB LICENSE No 61313 STATE OF FLORIDA PROFESSIONAL ENGINEER
9-17-2012

REV#	DATE	DESCRIPTION	BY

NOT VALID FOR CONSTRUCTION UNLESS SIGNED AND DATED.

WADE TRIM
3700 Dixie Highway NE, Suite D
Palm Bay, FL 32905
321.728.3393 FAX: 321.728.3393
Certificate of Authorization No. 3952
www.wadetrim.com
ALAN M. SCHWAB, 61313

Building relationships on a foundation of excellence

SWA BIOSOLIDS PROCESSING FACILITY
INDUSTRIAL WASTE FORCE MAIN PROJECT
PALM BEACH COUNTY, FLORIDA

ELECTRICAL SCHEMATICS
SWA BIOSOLIDS PROCESSING FACILITY

ISSUED FOR:	DATE:	BY:
75% REVIEW	05/02/12	CEM
100% REVIEW	06/15/12	CEM
FINAL DESIGN	7-6-12	CEM
ENV. PERMITS	9/17/12	CEM

SWA

JOB NO. NEF2001-01L

SHEET E-5

© Wade Trim Group, Inc.

PROJECT MANAGER—
C:\PW_WORK\MHORNE\D0346037\ESC-PLTS-ELECTRICAL_SCHEMATICS E-05.DWG - E-5 - PLOTTED 9/14/2012 11:04 AM BY HORNE, MICHAEL
FIELD BOOK INFORMATION—